COMPUTER NETWORKS

(CSC 258)

(B.Sc. CSIT – II/IV)

Unit-7

Vipul Gautam

7. Multimedia & Future Networking

7.1. Overview Multimedia Streaming Protocols

- *SCTP*

7.2. Overview of SDN and its Features, Data and Control Plane

7.3. Overview of NFV

7.4. Overview of NGN

MULTIMEDIA

- Recent advances in technology have changed our use of audio and video.
- In the past, we listened to an audio broadcast through a radio and watched a video program broadcast through a TV.
- We used the telephone network to interactively communicate.
- But times have changed. People want to use the Internet not only for text and image communications, but also for audio and video services.
- We can divide audio and video services into three broad categories.
- Streaming means a user can listen to (or watch) the file after the downloading has started.

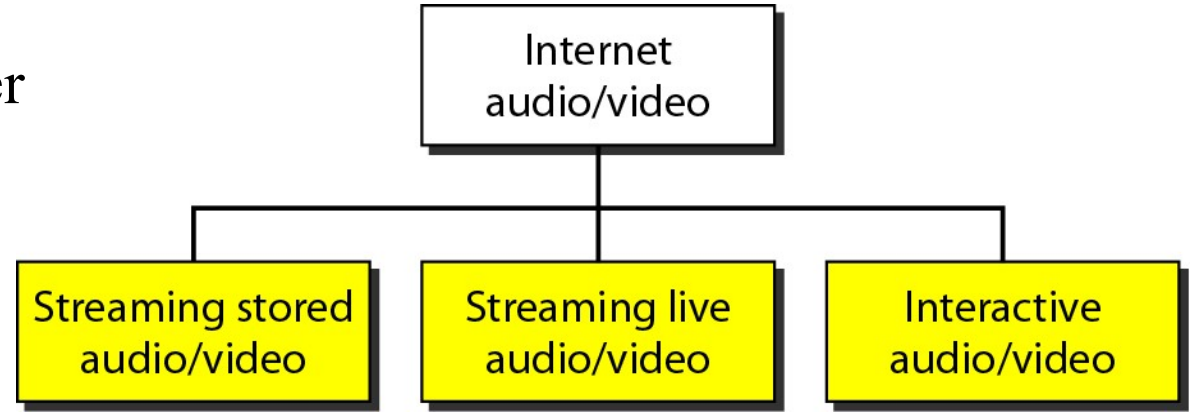

MULTIMEDIA

- In **streaming stored audio/video**, the files are compressed and stored on a server and the client downloads the files through the Internet.
- This is sometimes referred to as on-demand audio/video.
- Examples of stored audio files are songs, symphonies, books on tape, and famous lectures and examples of stored video files are movies, TV shows, and music video clips.
- In **streaming live audio/video**, a user listens to broadcast audio and video through the Internet. e.g. Internet radio.
- Many radio stations broadcast audio on both on the Internet and on the air whereas Internet TV is also popular nowadays.
- In **interactive audio/video**, people use the Internet to interactively communicate with one another. e.g., Internet telephony and Internet teleconferencing.

MULTIMEDIA STREAMING PROTOCOLS

- RTSP – Real Time Streaming Protocol
- RTP – Real-time Transport Protocol
- RTCP – Real-time Transport Control Protocol
- VOIP – Voice Over Internet Protocol
  - SIP (Session Initiation Protocol)
  - H.323

- SCTP – Stream Control Transmission Protocol

RTSP

- **Real Time Streaming Protocol (RTSP) is a control protocol** designed to add more functionalities to the streaming process.
- Using RTSP, we can control the playing of audio/video.
- RTSP is an **out-of-band control protocol** which is similar to the second connection in FTP (i.e. data and control in different bands).

1. The HTTP client accesses the Web server by using a GET message.
2. The information about the metafile (graphics files) comes in the response.
3. The metafile is passed to the media player.
4. The media player sends a SETUP message to create a connection with the media server.
5. The media server responds.
6. The media player sends a PLAY message to start playing (downloading).

RTSP (REAL TIME STREAMING PROTOCOL)

7. The audio/video file is downloaded by using another protocol like RTP that runs over UDP.

8. The connection is broken by using the TEARDOWN message.

9. The media server responds.

- The media player can send other types of messages.
- For example, a PAUSE message temporarily stops the downloading.
- And, downloading can be resumed with a PLAY message.

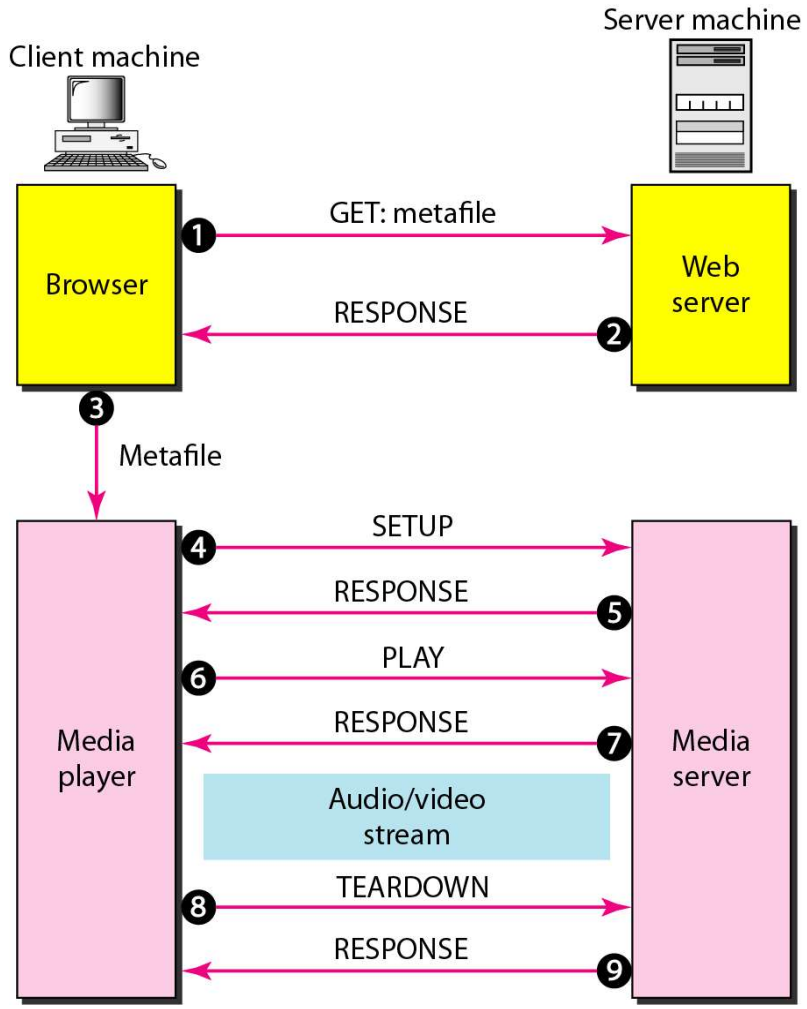

RTP – REAL-time TRANSPORT PROTOCOL

- RTP, Real-time Transport Protocol is designed to handle real-time traffic on the Internet.
- RTP does not have a delivery mechanism like multicasting, port numbers, and so on; it must be used with UDP.
- RTP stands between UDP and the application program.
- The main contributions of RTP are time-stamping, sequencing, and mixing facilities.

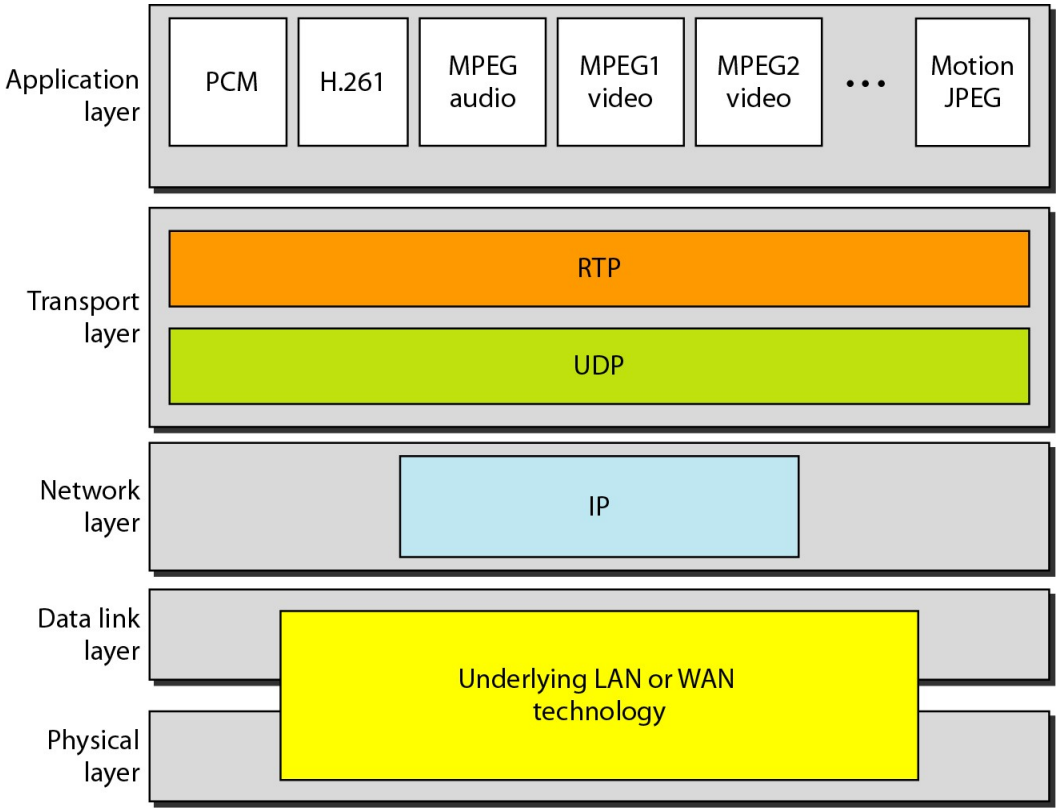

RTCP – REAL TIME TRANSPORT CONTROL PROTOCOL

- **RTP allows only one type of message, one that carries data from the source to the destination.**
- In many cases, there is a need for other messages in a session.
- These messages **control the flow and quality of data and allow the recipient to send feedback to the source** or sources.
- Real-time Transport Control Protocol (RTCP) is a protocol designed for this purpose.
- RTCP has **five types of messages**, as shown in figure in next slide.
- The number next to each box defines the type of the message.

RTCP MESSAGE

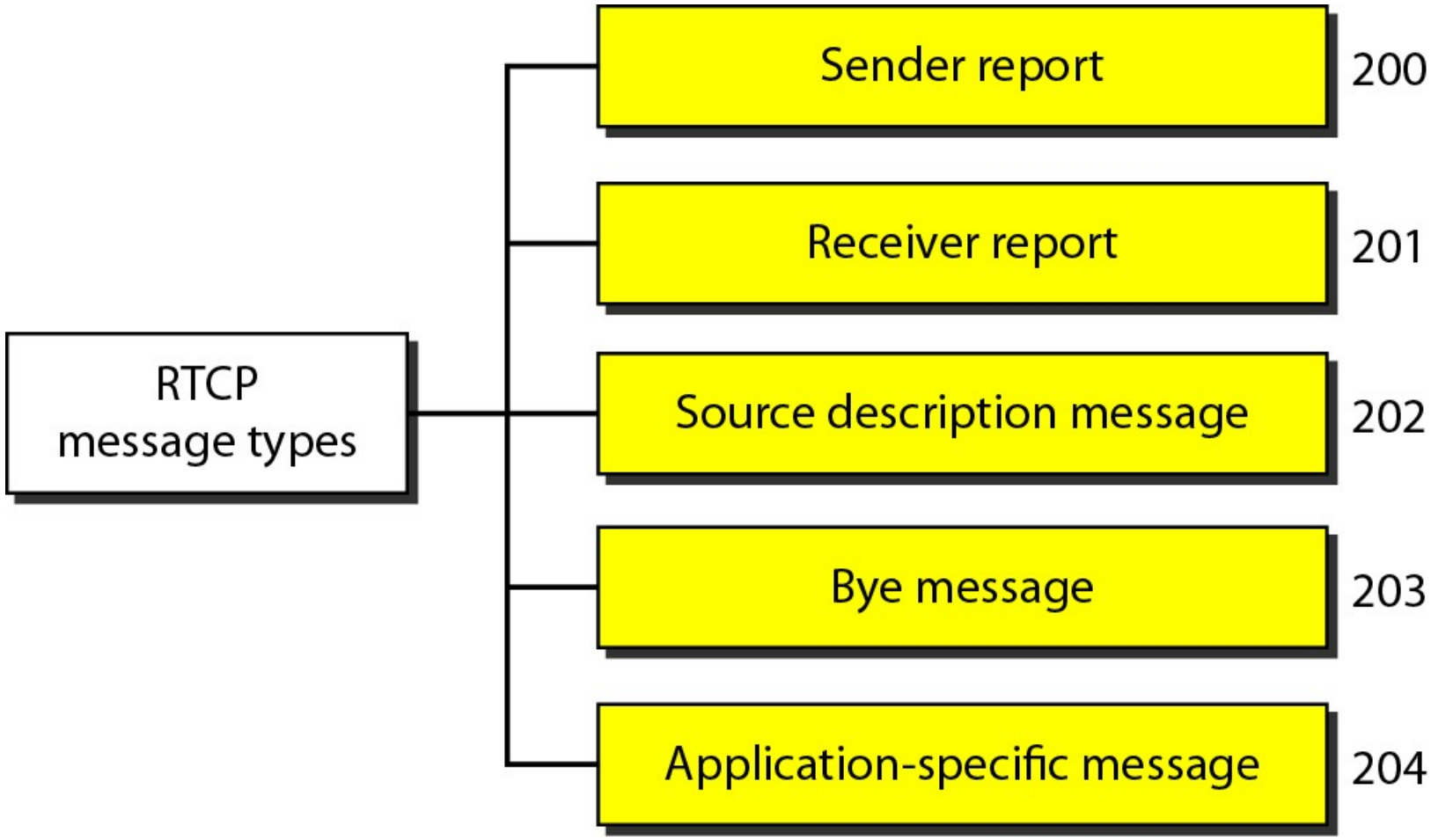

VOICE OVER IP (VOIP)

- Here, the idea is to **use the Internet as a telephone network** with some additional capabilities.
- Instead of communicating over a circuit-switched network, this application allows communication between two parties **over the packet-switched Internet**.
- Two protocols have been designed to handle this type of communication:
  - **SIP**
  - **H.323**

SIP (SESSION INITIATION PROTOCOL)

- SIP was designed by IETF.
- It is an application layer protocol that establishes, manages, and terminates a multimedia session (call).
- It can be used to create two-party, multiparty, or multicast sessions.
- SIP is designed to be independent of the underlying transport layer.
- It can run on UDP, TCP, or SCTP.

Messages

- As HTTP, SIP is a text-based protocol.
- SIP, like HTTP, uses messages.
- Six messages are defined.

Each message has a header and a body. The header consists of several lines that describe the structure of the message, caller's capability, media type, and so on

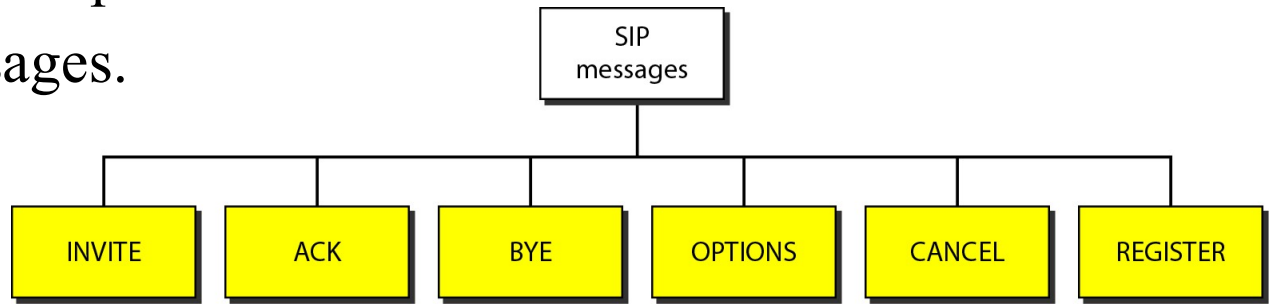

H.323

- H.323 is a standard designed by 1TV to allow telephones on the public telephone network to talk to computers (called *terminals* in H.323) connected to the Internet.
- Figure shows the general architecture of H.323 where a gateway connects the Internet to the telephone network.
- A gateway is a five-layer device that can translate a message from one protocol stack to another which transforms a telephone network message to an Internet message.
- The gatekeeper server on the local area network plays the role of the registrar server, similar to that in the SIP.

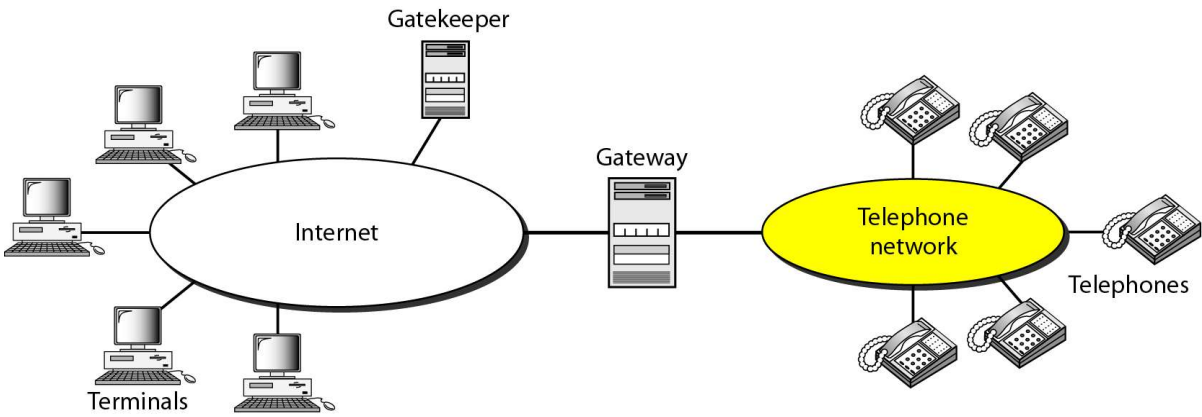

SCTP
(STREAM CONTROL TRANSMISSION PROTOCOL)

- Stream Control Transmission Protocol (SCTP) is a new **reliable, message-oriented transport layer protocol**.
- SCTP, however, is mostly designed for Internet applications that have recently been introduced.
- These applications, such as IUA (ISDN User Adaptation, i.e. ISDN over IP), M2UA and M3UA (telephony signaling), H.248 (media gateway control), H.323 (IP telephony), and SIP (IP telephony), need a more sophisticated service than TCP can provide.
- SCTP provides this enhanced performance and reliability.
- We briefly compare UDP, TCP, and SCTP:

UDP & SCTP

UDP is a message-oriented protocol.

- A process delivers a message to UDP, which is encapsulated in a user datagram and sent over the network.
- UDP conserves the message boundaries; each message is **independent of any other message**.
- This is a desirable feature when we are dealing with applications such as IP telephony and transmission of real-time data.
- But, UDP is unreliable; the sender cannot know the destiny of messages sent.
- A message can be lost, duplicated, or received out of order.
- UDP also lacks some other features, such as congestion control and flow control, needed for a friendly transport layer protocol.

TCP & SCTP

TCP is a byte-oriented protocol.

- It receives a message or messages from a process, stores them as a stream of bytes, and sends them in segments.
- There is no preservation of the message boundaries.
- And, TCP is a reliable protocol.
- The duplicate segments are detected, the lost segments are resent, and the bytes are delivered to the end process in order.
- TCP also has congestion control and flow control mechanisms.

SCTP combines the best features of UDP and TCP.

- **SCTP is a reliable message-oriented protocol.**
- It preserves the message boundaries and at the same time detects lost data, duplicate data, and out-of-order data.
- It also has congestion control and flow control mechanisms

SCTP SERVICES

- Process-to-Process Communication
- Multiple Streams
- Multi-homing
  - SCTP multihoming allows endpoints to provide alternate addresses for receiving data and specify the primary address to send to, using a different address if needed.
- Full-Duplex Communication
- Connection-Oriented Service
- Reliable Service

SCTP FEATURES & COMPARISON WITH TCP

Transmission Sequence Number (TSN)

- The unit of data in TCP is a byte.
- Data transfer in TCP is controlled by numbering bytes by using a sequence number.
- **The unit of data in SCTP is a DATA chunk** which may or may not have a one-to-one relationship with the message coming from the process because of fragmentation.
- Data transfer in SCTP is controlled by **numbering the data chunks**.
- **SCTP uses a TSN to number the data chunks.** i.e. the TSN in SCTP plays the analogous role to the sequence number in TCP.
- TSNs are 32 bits long and randomly initialized between 0 and 2^{32}- 1.
- Each data chunk must carry the corresponding TSN in its header.

SCTP FEATURES & COMPARISON WITH TCP

Stream Identifier (SI)

- In TCP, there is only one stream in each connection whereas in SCTP, there may be **several streams in each association**.
- Each stream in SCTP needs to be identified by using a SI.
- **Each data chunk must carry the SI in its header** so that when it arrives at the destination, it can be properly placed in its stream.
- The SI is a 16-bit number starting from 0.

Stream Sequence Number (SSN)

- When a data chunk arrives at the destination SCTP, it is delivered to the appropriate stream and in the proper order.
- i.e. in addition to an SI, SCTP defines each data chunk in each stream with a stream sequence number (SSN).

SCTP FEATURES & COMPARISON WITH TCP

Packets in SCTP

- In TCP, a segment carries data and control information.
- Data are carried as a collection of bytes; control information is defined by six control flags in the header.
- The design of SCTP is totally different:
  - **data are carried as data chunks**
  - **control information is carried as control chunks.**
- Several control chunks and data chunks can be packed together in a packet.
- **A packet in SCTP plays the same role as a segment in TCP.**
- Figure in next slide compares a segment in TCP and a packet in SCTP.

TCP SEGMENT & SCTP PACKET

Let us briefly list the differences between a SCTP packet and a TCP segment:

1. The control information in TCP is part of the header; the control information in SCTP is included in the control chunks.

There are several types of control chunks; each is used for a different purpose.

2. The data in a TCP segment is treated as one entity; an SCTP packet can carry several data chunks; each can belong to a different stream.

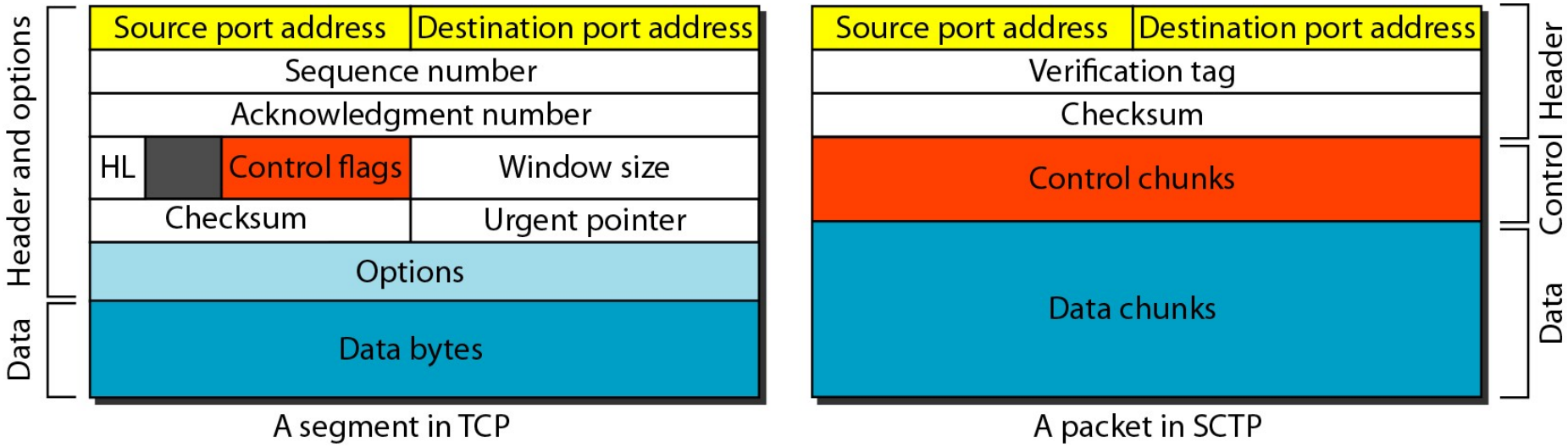

TCP SEGMENT & SCTP PACKET

3. The options section, which can be part of a TCP segment, does not exist in an SCTP packet. Options in SCTP are handled by defining new chunk types.

4. The mandatory part of the TCP header is 20 bytes, while the general header in SCTP is only 12 bytes. The SCTP header is shorter due to the following:

a. An SCTP sequence number (TSN) belongs to each data chunk and hence is located in the chunk's header.

b. The acknowledgment number and window size are part of each control chunk.

c. There is no need for a header length field (shown as HL in the TCP segment) because there are no options to make the length of the header variable; the SCTP header length is fixed (12 bytes).

d. There is no need for an urgent pointer in SCTP.

5. The checksum in TCP is 16 bits; in SCTP, it is 32 bits.

TCP SEGMENT & SCTP PACKET

6. The verification tag in SCTP is an association identifier, which does not exist in TCP.

In TCP, the combination of IP and port addresses defines a connection; in SCTP we may have multi-homing using different IP addresses.

A unique verification tag is needed to define each association.

7. TCP includes one sequence number in the header, which defines the number of the first byte in the data section.

An SCTP packet can include several different data chunks. TSNs, SIs, and SSNs define each data chunk.

8. Some segments in TCP that carry control information (such as SYN and FIN) need to consume one sequence number; control chunks in SCTP never use a **TSN, SI, or SSN.**

These three identifiers belong only to data chunks, not to the whole packet.

TCP SEGMENT & SCTP PACKET

- In SCTP, we have data **chunks, streams, and packets**.
- **An association may send many packets, a packet may contain several chunks, and chunks may belong to different streams.**
- Let us suppose that process A needs to send 11 messages to process B in three streams.
- The **first four** messages are in the first stream, the **second three** messages are in the second stream, and the **last four** messages are in the third stream.
- Although a message, if long, can be carried by several data chunks, we assume that each message fits into one data chunk.
- Therefore, we have **11 data chunks in three streams**.
- The application process delivers 11 messages to SCTP, where each message is ear-marked (reserved) for the appropriate stream.

PACKETS, DATA CHUNKS & STREAMS

- Although the process could deliver one message from the first stream and then another from the second, we assume that it delivers all messages **belonging to the first stream first**, all messages belonging to the **second stream next**, and **finally, all messages belonging to the last stream**.
- We also assume that the network allows only three data chunks per packet, which means that we need four packets as shown in figure.
- **Data chunks in stream 0 are carried in the first packet** and part of the second packet; those in stream 1 are carried in the second and third packets; those in stream 2 are carried in the third and fourth packets.

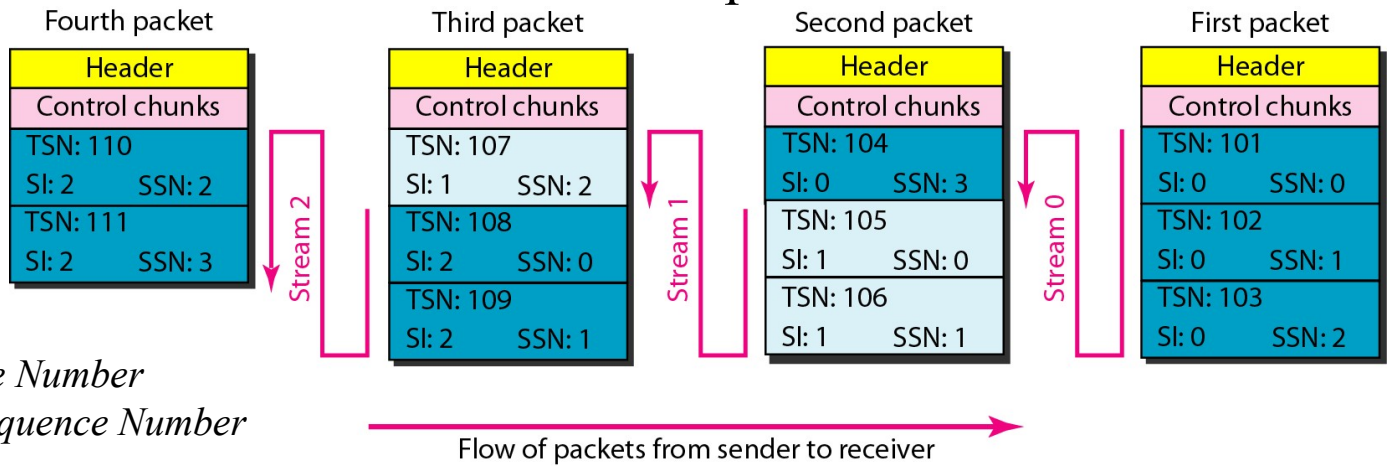

SI – Stream Identifier
SSN – Stream Sequence Number
TSN – Transmission Sequence Number

PACKETS, DATA CHUNKS & STREAMS

- Each data chunk needs three identifiers: TSN, SI, and SSN.
- TSN is a cumulative number and is used, for flow control and error control.
- SI defines the stream to which the chunk belongs.
- SSN defines the chunk's order in a particular stream.
- In our example, SSN starts from 0 for each stream.

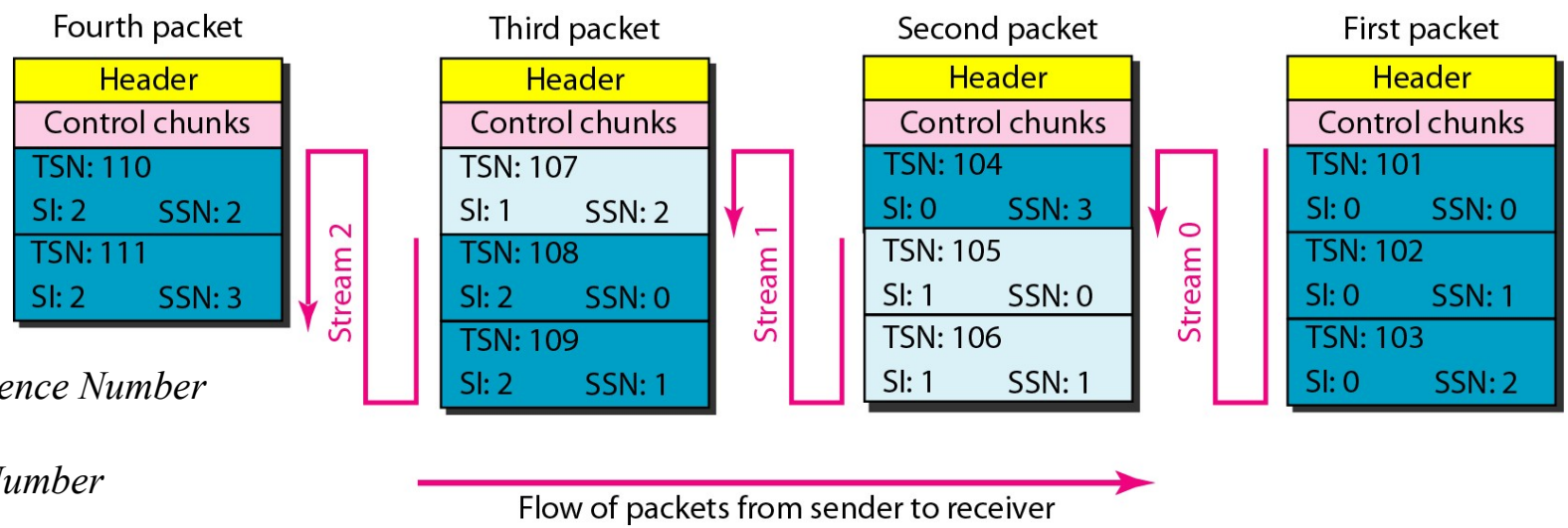

TSN – Transmission Sequence Number
SI – Stream Identifier
SSN – Stream Sequence Number

TCP SEGMENT & SCTP PACKET

Acknowledgment Number

- TCP acknowledgment numbers are byte-oriented and refer to the sequence numbers whereas **SCTP acknowledgment numbers are chunk-oriented and they refer to the TSN.**
- A second difference between TCP and SCTP acknowledgments is the **control information.**
- Recall that this information is part of the segment header in TCP.
- To acknowledge segments that carry only control information, TCP uses a sequence number and acknowledgment number (for example, a SYN segment needs to be acknowledged by an ACK segment).
- **In SCTP, however, the control information is carried by control chunks, which do not need a TSN.**
- These control chunks are acknowledged by another control chunk of the appropriate type (some need no acknowledgment).

TCP SEGMENT & SCTP PACKET

- For example, an INIT control chunk is acknowledged by an INIT ACK chunk thus no need for a sequence number or an acknowledgment number.

Flow Control

- Like TCP, SCTP implements flow control to avoid overwhelming the receiver.

Error Control

- Like TCP, SCTP implements error control to provide reliability.
- TSN numbers and acknowledgment numbers are used for error control.

Congestion Control

- Like TCP, SCTP implements congestion control to determine how many data chunks can be injected into the network.

PACKET FORMAT

- Here, we show the format of a packet and different types of chunks.
- An SCTP packet has a mandatory general header and a set of blocks called chunks.
- There are two types of chunks:
  - **control chunks**
  - **data chunks**.
- A control chunk controls and maintains the association.
- A data chunk carries user data.
- In a packet, the control chunks come before the data chunks.

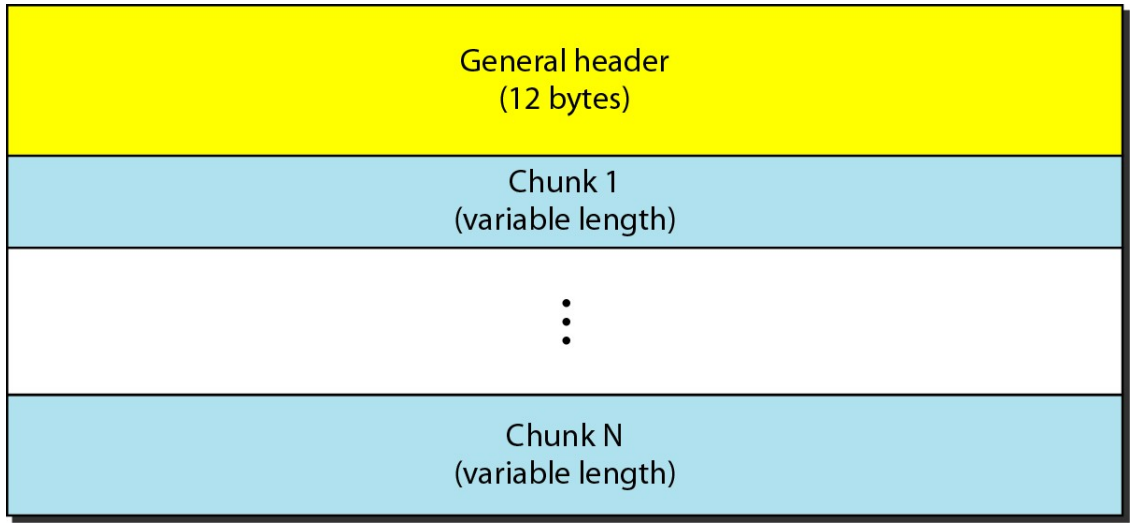

GENERAL HEADER

- The general header (packet header) defines the endpoints of each association to which the packet belongs, guarantees that the packet belongs to a particular association, and preserves the integrity of the contents of the packet including the header itself.
- There are four fields in the general header:
- **Source port address:** This is a 16-bit field that defines the port number of the process sending the packet.
- **Destination port address**: This is a 16-bit field that defines the port number of the process receiving the packet.

Source port address 16 bits	Destination port address 16 bits
Verification tag 32 bits	
Checksum 32 bits	

GENERAL HEADER

- **Verification tag**: This is a number that matches a packet to an association. This prevents a packet from a previous association from being mistaken as a packet in this association. It serves as an identifier for the association; it is repeated in every packet during the association. There is a separate verification used for each direction in the association.
- **Checksum**: This 32-bit field contains a CRC-32 checksum. Note that the size of the checksum is increased from 16 (in UDP, TCP, and IP) to 32 bits to allow the use of the CRC-32 checksum.

Source port address 16 bits	Destination port address 16 bits
Verification tag 32 bits	
Checksum 32 bits	

CHUNKS

- **Control information or user data are carried in chunks.**
- The first three fields are common to all chunks; the information field depends on the type of chunk.
- The important point to remember is that SCTP requires the information section to be a multiple of 4 bytes.
- If not, padding bytes are added at the end of the section.

Type	*Chunk*	*Description*
0	**DATA**	User data
1	**INIT**	Sets up an association
2	**INIT ACK**	Acknowledges INIT chunk
3	**SACK**	Selective acknowledgment
4	**HEARTBEAT**	Probes the peer for liveliness
5	**HEARTBEAT ACK**	Acknowledges HEARTBEAT chunk
6	**ABORT**	Aborts an association
7	**SHUTDOWN**	Terminates an association
8	**SHUTDOWN ACK**	Acknowledges SHUTDOWN chunk
9	**ERROR**	Reports errors without shutting down
10	**COOKIE ECHO**	Third packet in association establishment
11	**COOKIE ACK**	Acknowledges COOKIE ECHO chunk
14	**SHUTDOWN COMPLETE**	Third packet in association termination
192	**FORWARD TSN**	For adjusting cumulative TSN

SOFTWARE DEFINED NETWORKING (SDN)

- Software-defined networking is the idea of separating the **control plane** of a network from the **data plane (forwarding plane)** that forwards network traffic.
- The goal of this disaggregation is to create a network that is **centrally managed and programmable**.
- Some SDN implementations use a software-based management platform that controls commodity network hardware.
- Other implementers use an integrated hardware and software approach.
- The technology is primarily used in enterprise data centers for customers who demand a network that can more easily adapt to the needs of the business compared to traditional networking architectures.
- SDN also has a number of sub-categories, including software-defined Wide Area Network, or using SDN to microsegment network traffic for security purposes.

SDN FRAMEWORK

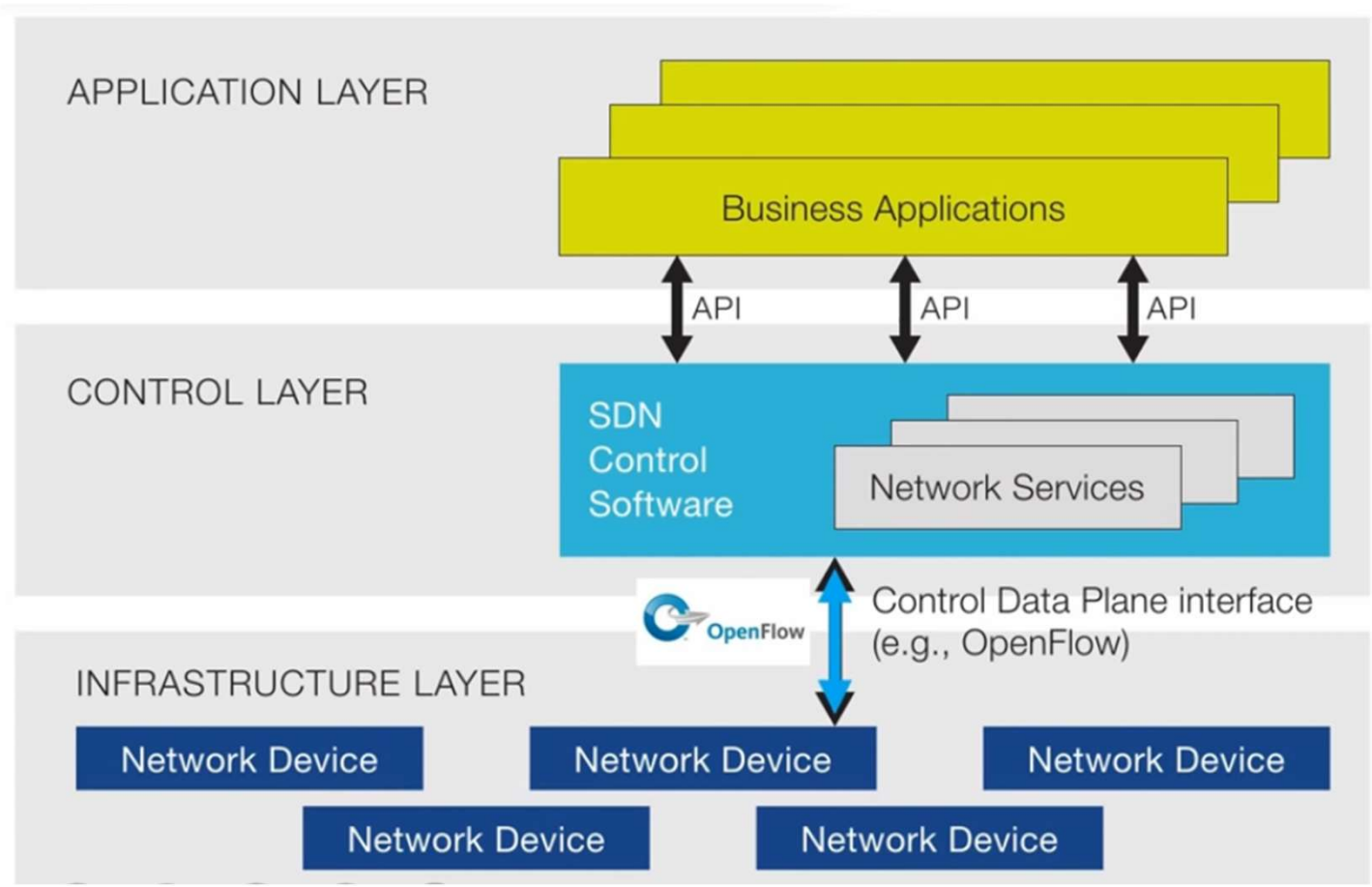

SDN Layers

Governing Specs

2011
ONF
Open Networking Foundation

IETF

SDN – CONTROL PLANE

- In networking, a *plane* is an abstract conception of where certain processes take place.
- The term is used in the sense of "plane of existence."
- The two most commonly referenced planes in networking are the **control plane** and the **data plane** (also known as the forwarding plane).

Control Plane (via Controller):

- The control plane is the part of a network that controls how data packets are forwarded — meaning how data is sent from one place to another.
- The process of creating a routing table, for example, is considered part of the control plane.
- Routers use various protocols to identify network paths, and they store these paths in routing tables.

SDN – DATA PLANE

Data Plane (via Switches):

- In contrast to the control plane, which determines how packets should be forwarded, the data plane actually forwards the packets.
- The data plane is also called the **forwarding plane**.
- e.g. think of the control plane like traffic lights that operate at the intersections of a city.
- Meanwhile, the data plane (or the forwarding plane) is more like the cars that drive on the roads, stop at the intersections, and obey the stoplights (traffic lights).

FEATURES OF SDN

1. **DIRECTLY PROGRAMMABLE:** Network control is directly programmable because it is decoupled from forwarding functions.

2. **AGILE:** Abstracting control from forwarding lets administrators dynamically adjust network-wide traffic flow to meet changing needs.

3. **CENTRALLY MANAGED:** Network intelligence is (logically) centralized in software-based SDN controllers that maintain a global view of the network, which appears to applications and policy engines as a single, logical switch.

4. **PROGRAMMATICALLY CONFIGURED:** SDN lets network managers configure, manage, secure, and optimize network resources very quickly via dynamic, automated SDN programs, which they can write themselves because the programs do not depend on proprietary software.

5. **OPEN STANDARDS-BASED AND VENDOR-NEUTRAL:** When implemented through open standards, SDN simplifies network design and operation because instructions are provided by SDN controllers instead of multiple, vendor-specific devices and protocols.

NETWORK FUNCTION VIRTUALIZATION (NFV)

- Network Function Virtualization was initially conceived by a consortium of telecommunications vendors who were looking to more easily control how they offer network services to customers.
- The fundamental idea of NFV is to virtualize network services and abstract them from dedicated hardware.
- NFV deployments typically use commodity servers to run software versions of network services that previously were hardware-based.
- Reference:
  - https://www.vmware.com/topics/glossary/content/network-functions-virtualization-nfv.html

NFV

- NFV is the replacement of network appliance hardware with virtual machines.
- The virtual machines use a hypervisor to run networking software and processes such as routing and load balancing.
- NFV allows for the separation of communication services from dedicated hardware, such as routers and firewalls.
- This separation means network operations can provide new services dynamically and without installing new hardware.
- Deploying network components with network functions virtualization takes hours instead of months like with traditional networking.
- Also, the virtualized services can run on less expensive, generic servers instead of proprietary hardware.
- **Pay-as-you-go**: Pay-as-you-go NFV models can reduce costs because businesses pay only for what they need.
- **Fewer appliances**: Because NFV runs on virtual machines instead of physical machines, fewer appliances are necessary and operational costs are lower.
- **Scalability**: Scaling the network architecture with virtual machines is faster and easier, and it does not require purchasing additional hardware.

VIRTUAL NETWORK FUNCTIONS (VNF)

- These software-based services are called Virtual Network Functions (VNF) and would run in an NFV environment.
- **Examples of VNFs include routing, firewalling, load balancing, WAN acceleration, and encryption.**
- By virtualizing these network services, providers can offer customers these services dynamically, with the ability to spin them up down on demand.

NEXT GENERATION NETWORKS (NGN)

- The term "next-generation network" or NGN refers to important developments in telecommunication core and access networks to be deployed over the next decade.
- ITU defines NGN as a packet-based network in which service-related functions are independent from underlying transport-related technologies.
- NGN enables unfettered (unrestricted) access for users to networks and to competing service providers and services of their choice.
- It supports generalized mobility which will allow consistent and ubiquitous (omni-present) provision of services to users.
- Next-generation networks are based on Internet technologies including Internet Protocol (IP) and multiprotocol label switching (MPLS).
- At the application level, Session Initiation Protocol (SIP) seems to be the leader.

3 MAIN CHANGES THAT MAKE “NGN”

1. In the **core network**, NGN implies a consolidation of several (dedicated or overlay) transport networks each historically built for a different service into one core transport network (often based on IP and Ethernet). It implies amongst others **the migration of voice from a circuit-switched architecture (PSTN) to VoIP**, and also migration of legacy services such as X.25, frame relay (either commercial migration of the customer to a new service **like IP VPN**, or technical emigration by emulation of the "legacy service" on the NGN).

2. In the **wired access network**, NGN implies the migration from the dual system of legacy voice next to xDSL setup in local exchanges to a converged setup in which the DSLAMs (**digital subscriber line access multiplexer**) **integrate *voice ports* or VoIP,** making it possible to remove the voice switching infrastructure from the exchange.

3. In the **cable access network**, NGN convergence implies migration of constant bit rate voice to CableLab’s PacketCable standards that provide VoIP and SIP services. Both services ride over DOCSIS as the cable data layer standard.

NEXT GENERATION NETWORKS (NGN)

The NGN has the following fundamental characteristics:

- Packet-based transfer.
- Separation of control functions among bearer capabilities, call/session, and application/service.
- Decoupling of service provision from transport, and provision of open interfaces.
- Support for a wide range of services, applications and mechanisms based on service building blocks (including real time/streaming/non-real time services and multi-media).
- Broadband capabilities with end-to-end QoS and transparency Interworking with legacy networks via open interfaces.
- Generalized mobility, unrestricted access by users to different service providers.

NEXT GENERATION NETWORKS (NGN)

- A variety of identification schemes which can be resolved to IP addresses for the purposes of routing in IP networks.
- Unified service characteristics for the same service as perceived by the user
- Converged services between Fixed and Mobile networks.
- Independence of service-related functions from underlying transport technologies.
- Support of multiple last mile technologies (autonomous delivery vehicles like drones and robots).
- Compliant with all regulatory requirements, for example concerning emergency communications and security/privacy, etc.
- The deployment of NGN as global IP infrastructure has a number of implications for regulation and public policy, including competition policy, interconnection, network safety and reliability, consumer protection, and universal service.