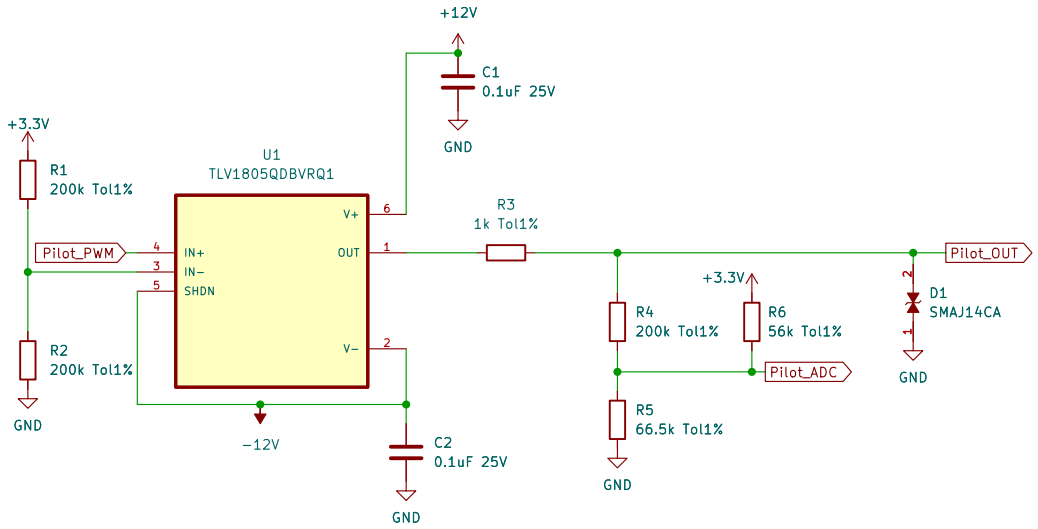

Julian Enrique Tovar Aranguren, Juan Esteban Bustos Rodriguez
Eddy Santiago Delgado Caro, Yanet Esther Estrada Lopez
Manuel Alejandro Pérez Carvajal, Maria Camila Muñoz Berrio
Universidad Nacional de Colombia

Sheet: /
File: ControlPilotPCB.kicad_sch

Title: Control Pilot

Size: User	Date:	**Rev:**
KiCad E.D.A. kicad (6.0.7)		Id: 1/1