DESCRIPTION	DIM "E"	DIM "A"	DIM "B"	DIM "C"	DIM "D"
H9700 97"	97.00	67.50	67.50	148.00	22.50
H9700 109"	109.00	73.50	73.50	160.00	28.50

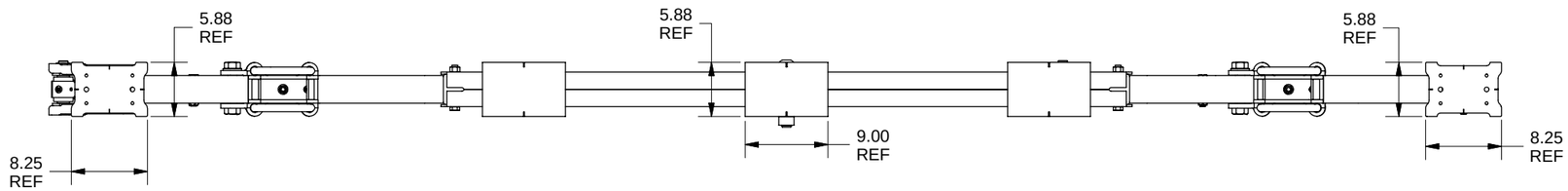

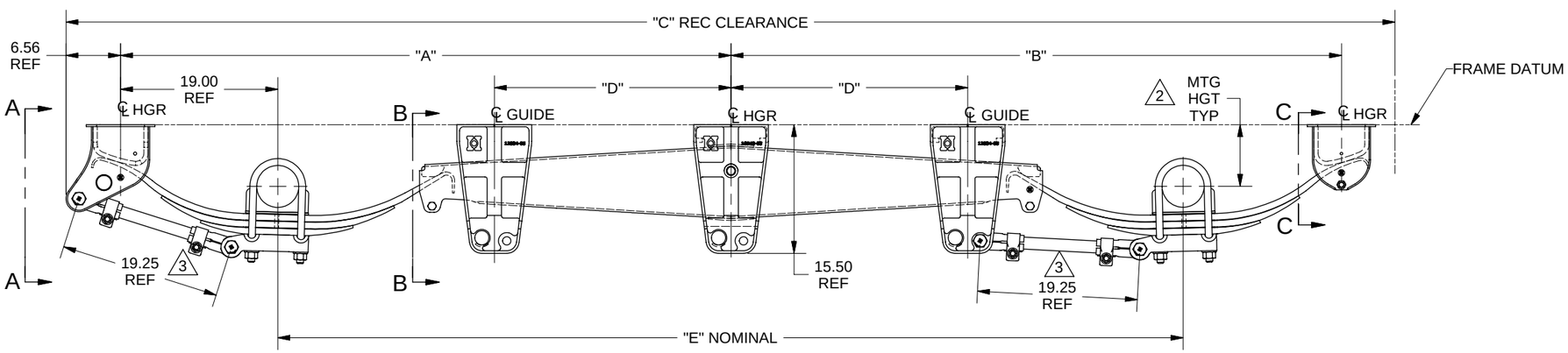

4. THIS SUSPENSION ASSEMBLY SHALL BE LIMITED TO USE WITH HIGH ARCH SPRINGS ONLY.

3. FORWARD AXLE WILL ALWAYS USE 19.25 LONG RADIUS RODS, ONE ADJUSTABLE, ONE NON-ADJUSTABLE, REMAINING AXLE(S) USE TWO ADJUSTABLE RADIUS RODS, LENGTHS AS SHOWN.

(A) 2. MOUNTING HEIGHT REFER TO HUTCHENS CATALOG.

1. 1.25 PIPE BRACE & LATERAL GUSSET (.173 MIN MATL) FURNISHED BY INSTALLER.

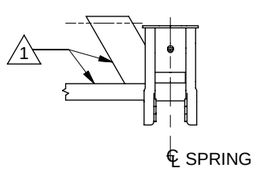

VIEW A-A

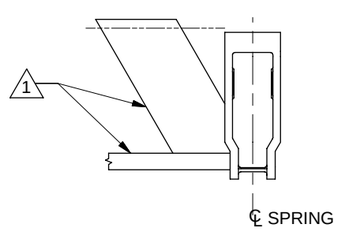

SECTION B-B

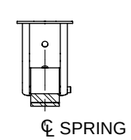

SECTION C-C

ER NO.	SYM	REVISIONS	DATE	BY	CHK	APPD
	A	REDRAWN. REFISED FLAGGED NOTE 2 WAS MOUNTING HEIGHT SHOWN FOR 109 AC USING 365-00 SPRING & .75 HIGH SEAT.	07/08	JAJ	BWH	RSB

DRAWN: CAU DATE: 7/24/1994
CHECKED: CHK DATE: XX/XX/XX
APPROVED: APPD DATE: XX/XX/XX
MFG APPL: MFG DATE: XX/XX/XX
ER: 8821 DATE: XX/XX/XX
PROJECT OR FILE REFERENCE NO. REC.# 805-1 PROJ.# 88-1200
SCALE: D SIZE - 1/8 B SIZE - 1/16

NEXT ASSY: NEXT

LAYOUT

HUTCHENS INDUSTRIES, INC.
SPRINGFIELD, MISSOURI

TITLE:
LAYOUT DRAWING
9700 WS 97 & 109, 5" RD
UNDERSLUNG, UNDERMOUNT

SHEET 1 OF 1 | SIZE: D | DRAWING NO.: 881200-02 | REV. A

DRAWING NO. 881200-02 | REV. A | 1 OF 1

This confidential drawing is the property of Hutchens Industries. Hutchens Industries makes no warranties regarding the information on this document. Nothing herein may be transmitted or disclosed in whole or in part to other parties. The recipient of this drawing agrees not use this information for manufacturing, nor will they modify, distribute, reverse engineer, or create derivative works based on the information contained on this print without the prior written permission of Hutchens Industries. The recipient agrees not to make copies of the document or reproduce in any manner the information in the document and to return it to Hutchens Industries upon request. Any use of this document is acceptance of the terms stated above.