Real-time FPGA Implementation of a Second order Volterra Filter for Ultrasound Nonlinear Imaging

Abhishek Sahoo and Emad S. Ebbini
Department of Electrical and Computer Engineering
University of Minnesota, Minneapolis, MN, USA
{sahoo015, ebbin001}@umn.edu

2022 IEEE International Symposium on Circuits and Systems (ISCAS) | 978-1-6654-8485-5/22/$31.00 ©2022 IEEE | DOI: 10.1109/ISCAS48785.2022.9937626

***Abstract*—Volterra series expansion is a widely used method for modeling nonlinear systems because of its simplicity, linearity with respect to the kernel coefficients, ability to generalize any order of nonlinearity etc. which makes it a suitable analytical tool for a wide range of applications. However, the higher computational complexity of the kernels is a major limiting factor for its use in real-time applications. The number of coefficients increases exponentially with the sample memory length and the order of nonlinearity, increasing the resource utilization immensely and restricting the system bandwidth. In this paper, we have discussed different architectures such as a direct form (with modification for timing improvement) and an eigenvalue decomposition based parallel-cascade method for implementation of a low cost, real-time quadratic Volterra filter on a Xilinx Zynq-7000 SoC FPGA board. Both the designs are compared based on their resource utilization and timing constraints. Behavioral performance of the nonlinear filters in the context of ultrasound image reconstruction is demonstrated using a quality assurance phantom data, sampled at a rate of 40 MHz.**

***Index Terms*—Volterra Filter, FPGA, Nonlinear ultrasound imaging, Hardware implementation.**

I. Introduction

Ultrasound images reconstructed using nonlinear echo components are proven to be superior in quality than the corresponding B-mode image in terms of contrast and resolution enhancement, reverberation and multiple scattering suppression, signal to noise ratio improvement etc. [1]. In addition to traditional nonlinear imaging techniques such as Tissue Harmonic Imaging (THI) and Pulse Inversion (PI) [2], polynomial signal processing based Volterra filtering scheme as an echo separation model has been successfully demonstrated to be a suitable method for high quality nonlinear image reconstruction. CTR enhancement with a TSVD regularized quadratic Volterra filter [3], perfusion characterization of a heterogeneous tumor using an adaptive RLS algorithm based cubic Volterra filter [4], tumor classification using a neural network approach [5] are some of the prior works in ultrasound nonlinear imaging. Recent development includes a band selective Volterra kernel synthesis approach for capturing and isolating quadratic interactions throughout the entire spectrum, which is demonstrated on multiple phantom and *in vivo* dataset to enhance overall quality of the image [6].

Real-time hardware implementation of signal processing and neural network algorithms applied in various domains have been demonstrated successfully in [7]–[9]. An application specific implementation of a Volterra series based digital predistorter for RF power amplifier is discussed in [10]. Although Volterra filter as a computational tool for ultrasound imaging application is successfully demonstrated, its hardware implementation in real-time has always been challenging due to its higher computational complexity. Exponential growth of the number of kernel coefficients as a function of the sample memory length and the order of nonlinearity limits the maximum frequency of the signal that can be processed in real-time. At the same time, the resource requirements must be well within the finite limit of the physical resources available for the hardware board used in an application. To address these issues, we have adopted an efficient architecture for hardware implementation that runs on significantly less resources and is capable of processing signals of higher frequency compared to the direct form implementation. The rest of the paper is organized to explain the mathematical basis of a generic Volterra filter, and discuss different realization strategies, the experimental setup, materials and methods used in our work, present the results to compare performance of the different methods followed by concluding remarks.

II. Volterra Filter

A discrete-time Volterra filter of order P with finite memory N is described by the following input-output relationship [11]:

$$y[n] = h_0 + \sum_{p=1}^{P} \bar{h}_p[x[n]] \tag{1}$$

where $x[n]$ and $y[n]$ represent input and output of the system, respectively, and $\bar{h}_p$ is the pth order Volterra component as described below:

$$\bar{h}_p[x[n]] = \sum_{n_1=0}^{N-1} ... \sum_{n_p=0}^{N-1} h_p[n_1, ..., n_p] x[n-n_1]...x[n-n_p] \tag{2}$$

where $h_p[n_1, ..., n_p]$ is the pth order Volterra kernel of the system. Without loss of generality, a second order Volterra filter (also called the quadratic component) is considered here for simplicity of analysis. From equation (2), we can observe that the quadratic Volterra kernel $h_2[n_1, n_2]$ is a two-dimensional entity, a symmetric matrix of size NxN. The enforcement of symmetry in the kernel is a direct result of inherent symmetry present in the quadratic cross-terms of the

Authorized licensed use limited to: Indian Institute of Technology Gandhinagar. Downloaded on October 31,2025 at 12:52:25 UTC from IEEE Xplore. Restrictions apply.

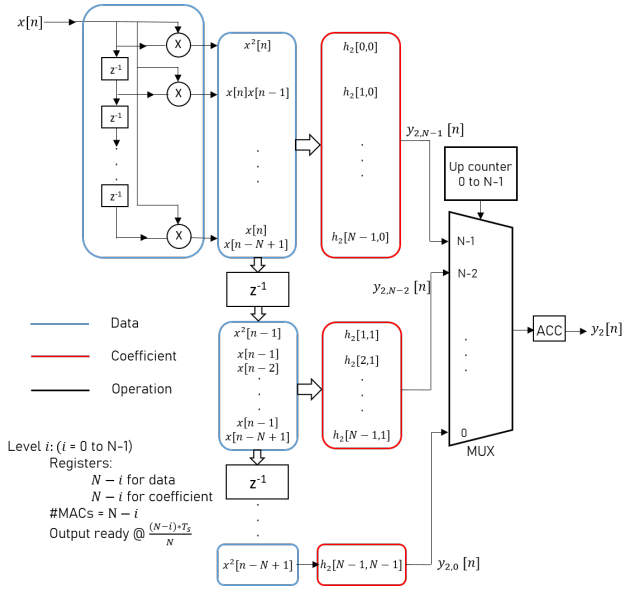

Fig. 1. Direct form implementation of quadratic Volterra filter.

input data samples and the equation can now be modified to remove redundancy as below:

$$y_2[n] = \sum_{n_1=0}^{N-1} \sum_{n_2=n_1}^{N-1} h_2[n_1, n_2] x[n-n_1] x[n-n_2] \tag{3}$$

A. Direct-Form Implementation

Block diagram of the direct-form implementation [12] of equation (3) is shown in Fig. 1, where we can see that computation of one sample of the output requires $\frac{N(N+1)}{2}$ multiply-and-accumulate (MAC) operations. The quadratic generator block is the first stage of processing that consists of a shift register of size N, and N multipliers to generate N number of second order cross-product terms of the input data samples. The second stage implements a delay line that sequentially propagates quadratic terms from current to the next level with loss of the least recent quadratic term. This essentially ensures processing of only the non-redundant samples, decreasing the size of levels gradually that gives the block its characteristic triangular shape. In general, the ith level ($i = 0$ to $N-1$) is associated with a data vector of size $N-i$ containing the quadratic terms $[x^2[n-i],\ x[n-i]x[n-i-1],\ ...,\ x[n-i]x[n-N+1]]^T$ and a coefficient vector of size $N-i$ containing the kernel values $[h_2[i,i],\ h_2[i+1,i],\ ...,\ h_2[N-1,i]]^T$. This leads to $N-i$ number of MAC operations at the ith level to compute the intermediate output $y_{2,N-i-1}$, which should be computed and be available at time $\frac{(N-i)*T_s}{N}$. This means that the higher order stages require lesser number of MACs and the intermediate outputs are made available to the next stage accumulator in a reverse order via an $N:1$ multiplexer, which channels the intermediate outputs for continuous accumulation to improve network latency. The accumulator resets every sample period (T_s).

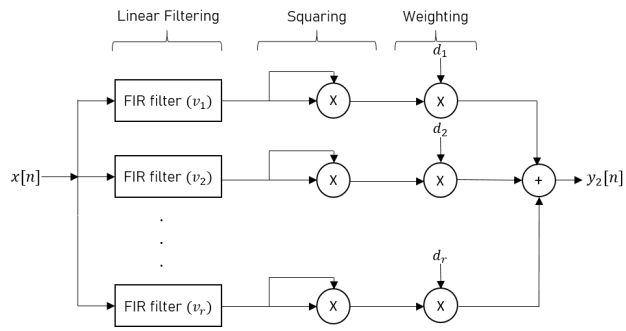

Fig. 2. Parallel cascade realization of quadratic Volterra filter.

B. Parallel cascade implementation

The eigenvalue decomposition (EVD) of the symmetric quadratic kernel (h_2) results in real eigenvalues. If the rank of the matrix is r, then the EVD can be expressed as below:

$$h_2 = VDV^T = \sum_{i=1}^{r} d_i \boldsymbol{v}_i \boldsymbol{v}_i^T \tag{4}$$

The quadratic output can now be computed as:

$$\begin{aligned} y_2[n] &= \boldsymbol{x}^T[n] h_2 \boldsymbol{x}[n] \\ &= \sum_{i=1}^{r} d_i [\boldsymbol{x}^T[n]\boldsymbol{v}_i][\boldsymbol{v}_i^T \boldsymbol{x}[n]] = \sum_{i=1}^{r} d_i y_{2,i}^2[n] \end{aligned} \tag{5}$$

where $y_{2,i}$ is the linear output of the ith parallel branch as shown below:

$$y_{2,i}[n] = \boldsymbol{x}^T[n]\boldsymbol{v}_i = \boldsymbol{v}_i^T \boldsymbol{x}[n] \tag{6}$$

This forms the basis of parallel cascade implementation [11]–[13] of the quadratic Volterra filter which is shown in Fig. 2. The input is filtered using r number of linear FIR filters with the coefficients being the values of the corresponding eigen vectors. The filtered values are then squared and weighted with the corresponding eigenvalues and summed to obtain the final output. The advantage of EVD based parallel cascade realization comes from the fact that most of the energy is concentrated in only a few dominant eigen modes and hence the system can be approximated by a small number of parallel structures.

III. Materials and Methods

A. Imaging Dataset

A quality assurance (QA) phantom with several contrast and resolution targets was imaged using a linear array probe LA14-5/38 with a transmit frequency of 10 MHz. The RF data were sampled at a rate of 40 MHz using a Sonix RP (Ultrasonix, Richmond, BC, Canada) ultrasound imaging system. The B-mode image of the phantom data highlighting a few local ROIs and is shown in Fig. 3.

Authorized licensed use limited to: Indian Institute of Technology Gandhinagar. Downloaded on October 31,2025 at 12:52:25 UTC from IEEE Xplore. Restrictions apply.

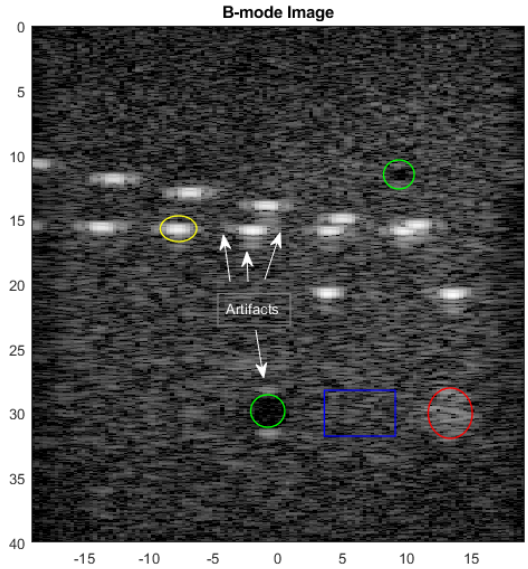

Fig. 3. B-mode image of the QA phantom data displayed with a dynamic range of 45 dB. The red, green, and the yellow circles represent the positive contrast, cyst and the wire targets respectively. The blue rectangle is the tissue region and the white arrows point to the visible imaging artifacts such as on-axis reverberation and beamforming artifacts.

B. Volterra kernel estimation

A least-squares based coefficient estimation algorithm was used for learning a quadratic Volterra filter. Data samples from a few A-lines were used to obtain the least-squares auto-correlation matrix and cross-correlation vector, which were used to compute the optimal filter coefficients. As a pre-processing step, the auto-correlation matrix was first decomposed using SVD and the individual singular modes were used to compute multiple quadratic kernels. It was observed that the high energy modes were mostly dominated by the fundamental energy where the quadratic energy interactions were captured by the low energy modes. The relevant individual kernels were then filtered using 2D Gaussian filters to remove the incoherent secondary peaks present in their bifrequency responses and grouped coherently to synthesize the final quadratic kernel.

C. Hardware Implementation

The hardware design step was performed from a host computer using the IDE System Generator 2017.4, The Mathworks Inc. After successful behavioral simulation, the resource and timing analysis were performed with a 50 MHz clock frequency. Finally, the design was downloaded to a Xilinx Zynq-7000 SoC FPGA and hardware-in-the-loop simulation was performed. Both the direct form and the parallel cascade realization of the quadratic Volterra filter were implemented for nonlinear filtering of the QA phantom data.

D. Performance Evaluation

Contrast to Tissue Ratio (CTR) is calculated by taking ratio of signal powers in the contrast and the tissue regions as shown below:

$$CTR = 10\log_{10}\left[\frac{P_{\text{contrast}}}{P_{\text{tissue}}}\right] \tag{7}$$

where P denotes the signal power. Both the positive and negative contrast targets of various sizes are used to demonstrate CTR enhancement.

Spatial resolution of an image is quantified by computing 2D correlation cell size [14] in a speckle-like tissue region. Direct measurement of lateral and axial extents of the wire targets also give a sense of spatial resolution of the images.

Imaging artifacts such as reverberation, clutter, and beamforming artifacts are characterized qualitatively for demonstrating image quality enhancement.

IV. Results And Discussion

A band selective quadratic Volterra kernel synthesis approach was used to estimate a filter of memory length 14. Both the data and the coefficients were represented with 12 bits of fixed point precision (10 for fractional, one for sign and integer each) to achieve a 66 dB of dynamic range. Careful bit allocation strategies were adopted to allow bit growth in the intermediate stages. The direct form realization consisted of 14 parallel stages, all of which ran 14 times faster than the sampling frequency. Due to the triangular shape of the block, the intermediate outputs were made available to the final output accumulator sequentially, which improved the network latency. For the parallel cascade structure, the EVD resulted in two dominant modes, where most of the energy were concentrated. Hence the quadratic kernel could be approximated by only two parallel structures, each consisting of an FIR filter of size 14, two multipliers (one for squaring, one for weighting) and one adder for summing both the parallel branches. A slight improvement in resource utilization was achieved by moving the magnitude of the weight values from weighting stage to the FIR filtering stage to assimilate the square root of the magnitude of the weight values with the coefficients. In this way, the two multipliers in the weighting stage could be replaced by two conditional blocks to detect the sign of the weight values and then either add or take difference of the two parallel branches depending on their relative signs.

TABLE I
Resource Utilization of different architectures

Architecture	BRAMs (140)	DSPs (220)	LUTs (53200)	Registers (106400)
Direct Form	14	15	1178	603
Parallel Cascade	1	14	168	327
Modified Parallel Cascade	1	10	190	329

A comparative analysis of hardware resource utilization for both the architectures is captured in Table I. We can see that both the parallel cascade and its modified form result in significant improvement in resource utilization compared to the direct form implementation (reduction of approximately 92% BRAMs, 33% DSPs, 83% LUTs, 45% registers). Timing

Authorized licensed use limited to: Indian Institute of Technology Gandhinagar. Downloaded on October 31,2025 at 12:52:25 UTC from IEEE Xplore. Restrictions apply.

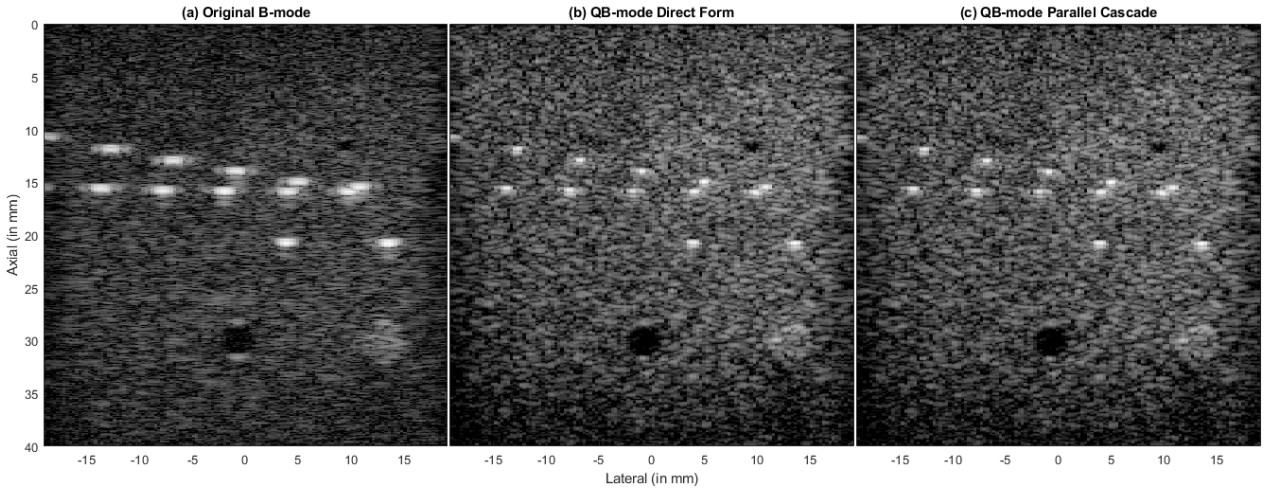

Fig. 4. Comparison of B-mode and the QB-mode images reconstructed using direct form and parallel cascade realizations.

analysis also demonstrates similar findings, where the worst negative slack (WNS) of the direct form, parallel cascade and the modified parallel cascade are 9.54, 14.77, 14.91 ns respectively, run with a 20 ns (50 MHz) clock period. This implies that the maximum bandwidth that the three designs can support are 95.6, 191.2, 196.4 MHz respectively. Another advantage of the parallel cascade realization is its scalability, which allows a variable filter memory length to be incorporated in different applications without the need to change the design, whereas the direct form results in a rigid design, where the number of computation stages is fixed according to the filter memory length. Applications with different filter specifications would require design changes. Hence the parallel cascade realization is proven to be efficient in all accounts. The only downside of this approach is that it needs an additional step of EVD computation of the quadratic kernel. However, kernel estimation is a one time offline processing step and is assumed to be available and loaded to the FPGA ROM before the actual filtering begins. So it is not a huge disadvantage from an implementation point of view.

Next, we investigate the quality of nonlinear image reconstruction performed with fixed point precision on an FPGA platform using the implementation strategies mentioned above. Fig. 4 shows that both the architectures have similar performances in terms of image reconstruction. Moreover, both the QB-mode images report contrast enhancement for both the positive contrast and the cyst targets, and resolution improvement as captured in Table II. Fig. 4 shows suppression of imaging artifacts such as clutter, and specular reflection in the cyst targets, reverberation, and beamforming artifacts around the wire targets in the QB-mode images which were distinctly visible in the original B-mode image. It is interesting to notice that the quality of filtering and image reconstruction is not compromised by approximating the parallel cascade realization with only two dominant eigen modes. This gives the implementation method a significant advantage to run application with drastically lesser resources without affecting its functional performance.

TABLE II
PERFORMANCE EVALUATION OF DIFFERENT IMAGING DATASET

	B-mode	**QB-mode**	
		Direct Form	Parallel Cascade
CTR (in dB)			
Contrast	6.62	10.94	10.95
Cyst (Big)	-11.15	-28.88	-27
Cyst (Small)	-13	-23.05	-21.42
Spatial Resolution (in mm)			
Lateral	1.54	1.16	1.13
Axial	0.5	0.64	0.6
Wire Targets (in mm)			
Lateral	1.75	1.15	1.16
Axial	0.79	0.53	0.51

V. CONCLUSION

A second order Volterra filter was implemented on a Xilinx Zynq-7000 SoC FPGA hardware using a direct form and an EVD based parallel cascade realization for processing B-mode image of a quality assurance ultrasound phantom. Quadratic image reconstruction using both the algorithms achieved similar performance in terms of contrast and resolution enhancement, artifact suppression and overall improvement in specificity compared to the B-mode data. Performance of the parallel cascade architecture was observed to be significantly higher than the direct form implementation in terms of resource consumption and timing constraints. Scalability of the parallel cascade architecture was another advantage from ease of design portability point of view. Such simple and efficient architectures hold potential for hardware implementation of low cost, low power standalone wearable devices in real-time diagnostic and therapeutic applications.

Authorized licensed use limited to: Indian Institute of Technology Gandhinagar. Downloaded on October 31,2025 at 12:52:25 UTC from IEEE Xplore. Restrictions apply.

REFERENCES

[1] Francis A. Duck, "Nonlinear acoustics in diagnostic ultrasound," *Ultrasound in Medicine and Biology*, vol. 28, no. 1, pp. 1–18, 2002.

[2] Arash Anvari, Flemming Forsberg, and Anthony E. Samir, "A primer on the physical principles of tissue harmonic imaging," *Radiographics*, vol. 35, no. 7, pp. 1955–1964, 2015.

[3] Pornchai Phukpattaranont and Emad S Ebbini, "Post-Beamforming Second-Order Volterra Filter for Pulse-Echo Ultrasonic Imaging," *IEEE Transactions on Ultrasonics, Ferroelectrics, and Frequency Control*, vol. 50, no. 8, pp. 987–1001, 2003.

[4] Juan Du, Dalong Liu, and Emad S. Ebbini, "Nonlinear Imaging of Microbubble Contrast Agent Using the Volterra Filter: In Vivo Results," *IEEE Transactions on Ultrasonics, Ferroelectrics, and Frequency Control*, vol. 63, no. 12, pp. 2069–2081, 2016.

[5] Michelle Kleckler, Abhishek Sahoo, Soheil Mohajer, and Emad Ebbini, "Characterization of Heterogeneous Perfusion in Contrast-Enhanced Ultrasound," *IEEE International Ultrasonics Symposium, IUS*, vol. 2018-Janua, pp. 1–4, 2018.

[6] Abhishek Sahoo and Emad S. Ebbini, "Data-Driven Quadratic Kernel Synthesis for Nonlinear Ultrasound Imaging," *IEEE International Ultrasonics Symposium, IUS*, pp. 1–4, 2021.

[7] Seul Jung and Sung Su Kim, "Hardware implementation of a real-time neural network controller with a DSP and an FPGA for nonlinear systems," *IEEE Transactions on Industrial Electronics*, vol. 54, no. 1, pp. 265–271, 2007.

[8] Mahmoud Hamouda, Handy Fortin Blanchette, Kamal Al-Haddad, and Farhat Fnaiech, "An efficient DSP-FPGA-based real-time implementation method of SVM algorithms for an indirect matrix converter," *IEEE Transactions on Industrial Electronics*, vol. 58, no. 11, pp. 5024–5031, 2011.

[9] Hassan Rabah, Abbes Amira, Basant Kumar Mohanty, Somaya Almaadeed, and Pramod Kumar Meher, "FPGA Implementation of Orthogonal Matching Pursuit for Compressive Sensing Reconstruction," *IEEE Transactions on Very Large Scale Integration (VLSI) Systems*, vol. 23, no. 10, pp. 2209–2220, 2015.

[10] Lei Guan and Anding Zhu, "Low-Cost FPGA Implementation of Volterra Series-Based Digital Predistorter for RF Power Amplifiers," *IEEE Transactions on Microwave Theory and Techniques*, vol. 58, no. 4, pp. 866–872, 2010.

[11] V.J. Mathews and G.L. Sicuranza, "Volterra and general polynomial related filtering," *IEEE Winter Workshop on Nonlinear Digital Signal Processing*, vol. 2, pp. T_2.1–T_2.8, 1993.

[12] V. John Mathews and L. Giovani, *Polynomial Signal Processing*, A Wiley-Interscience publication, 2000.

[13] Thomas M. Panicker, V. John Methews, and Giovanni L. Sicuranza, "Adaptive Parallel-Cascade Truncated Volterra Filters," *IEEE Transactions on Signal Processing*, vol. 46, no. 10, pp. 2664–2673, 1998.

[14] Robert F. Wagner, Michael F. Insana, and Stephen W. Smith, "Fundamental Correlation Lengths of Coherent Speckle in Medical Ultrasonic Images," *IEEE Transactions on Ultrasonics, Ferroelectrics, and Frequency Control*, vol. 35, no. 1, pp. 34–44, 1988.

Authorized licensed use limited to: Indian Institute of Technology Gandhinagar. Downloaded on October 31,2025 at 12:52:25 UTC from IEEE Xplore. Restrictions apply.