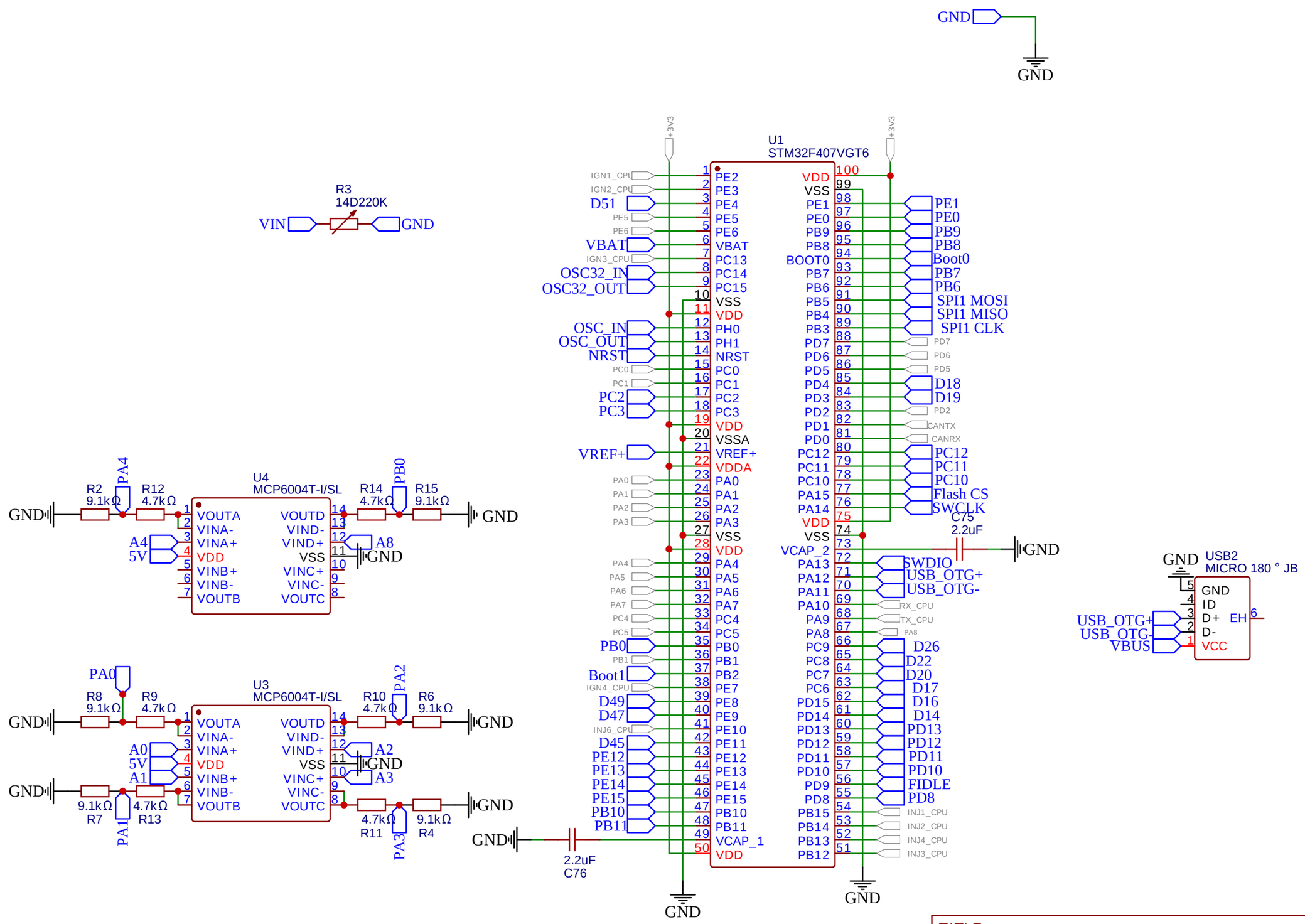

TITLE: Sheet_1	REV: 1.0
Company: Your Company	Sheet: 1/1
Date: 2024-10-26 Drawn By: jbgs_ch_mex	

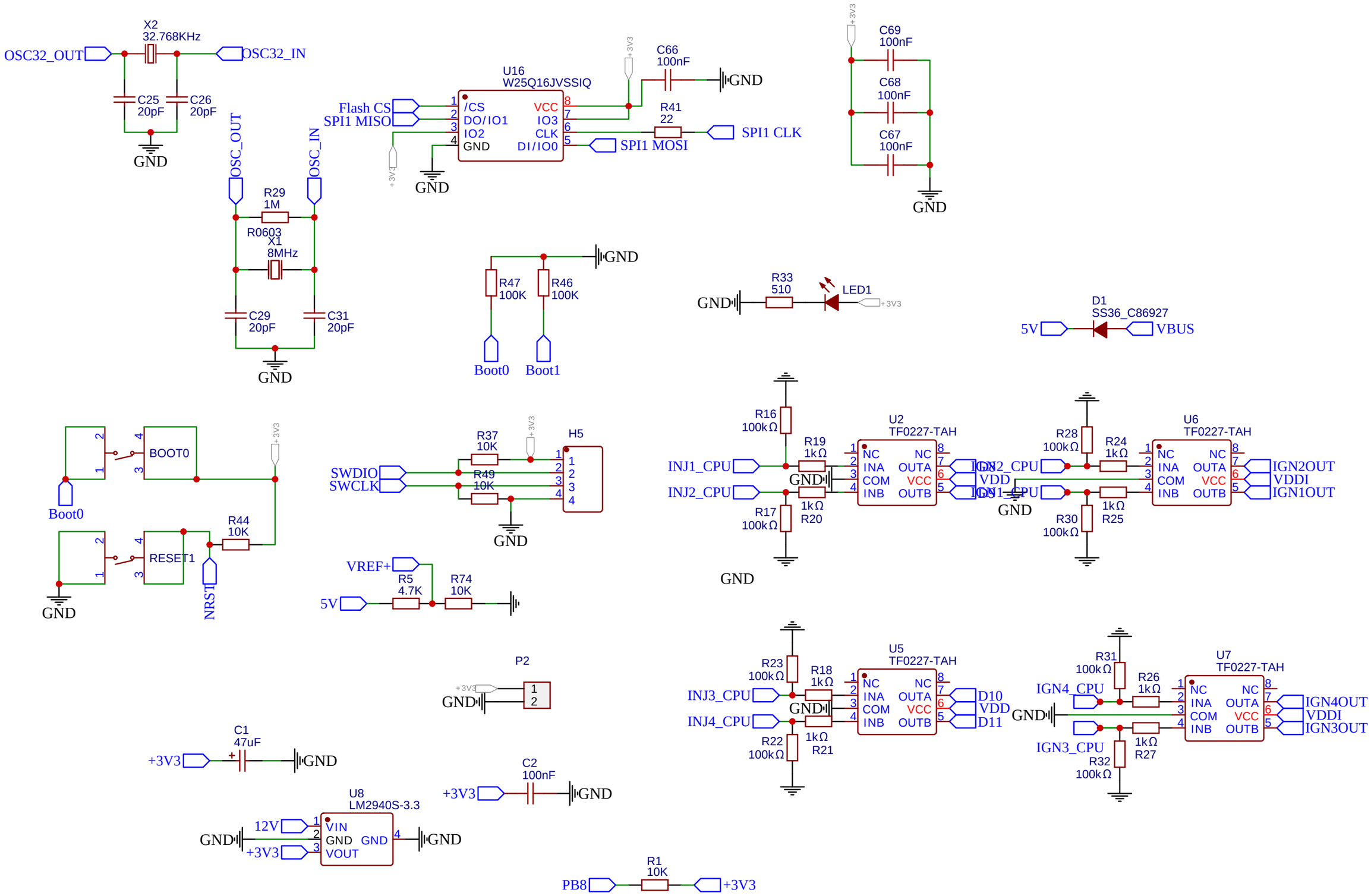

TITLE: Sheet_2	REV: 1.0
EasyEDA	Company: Your Company
	Sheet: 1/1
	Date: 2024-10-26 Drawn By: jbgs_ch_mex

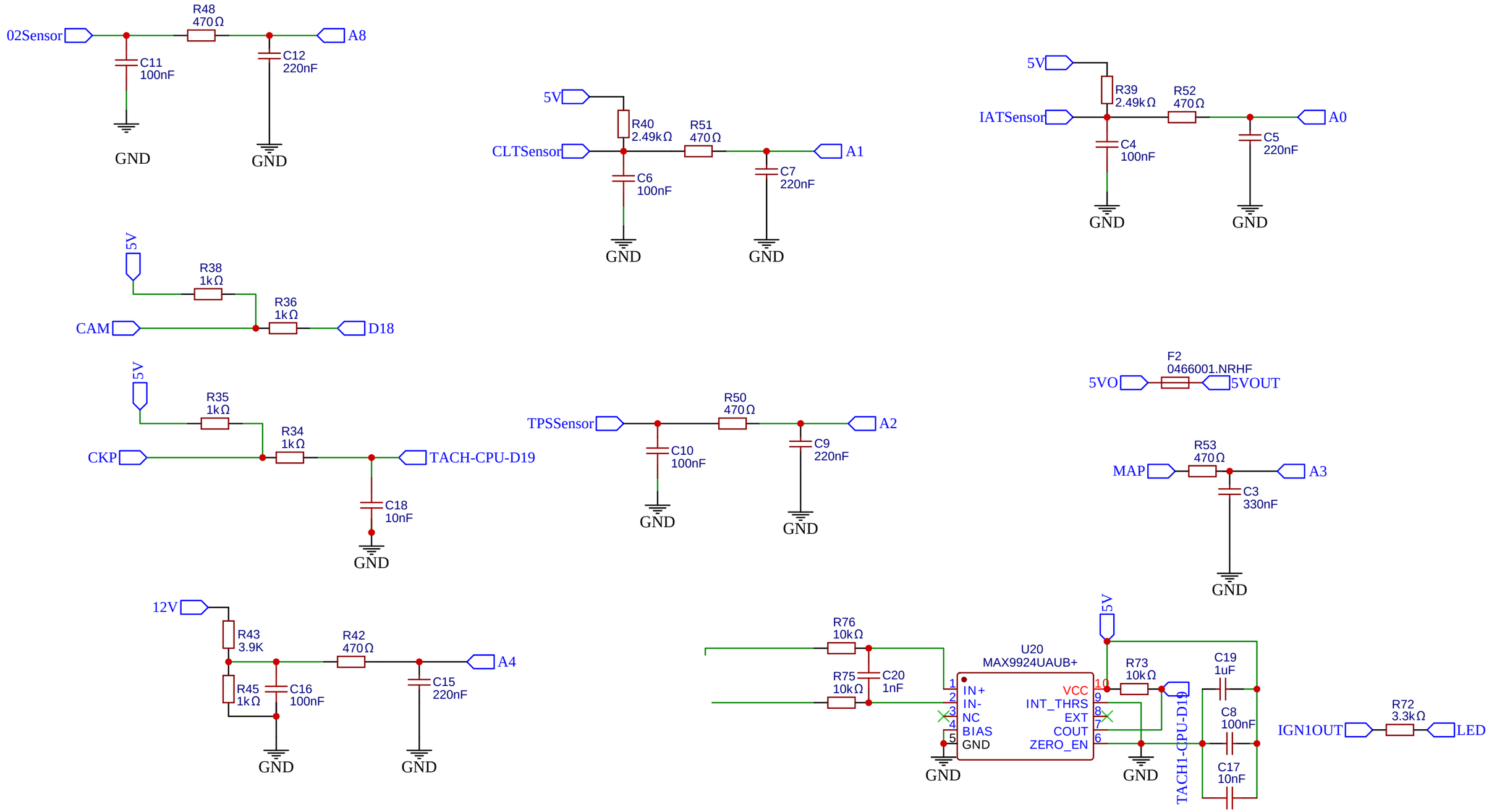

TITLE: Sheet_3	REV: 1.0
Company: Your Company	Sheet: 1/1
Date: 2024-10-26 Drawn By: jbgs_ch_mex	

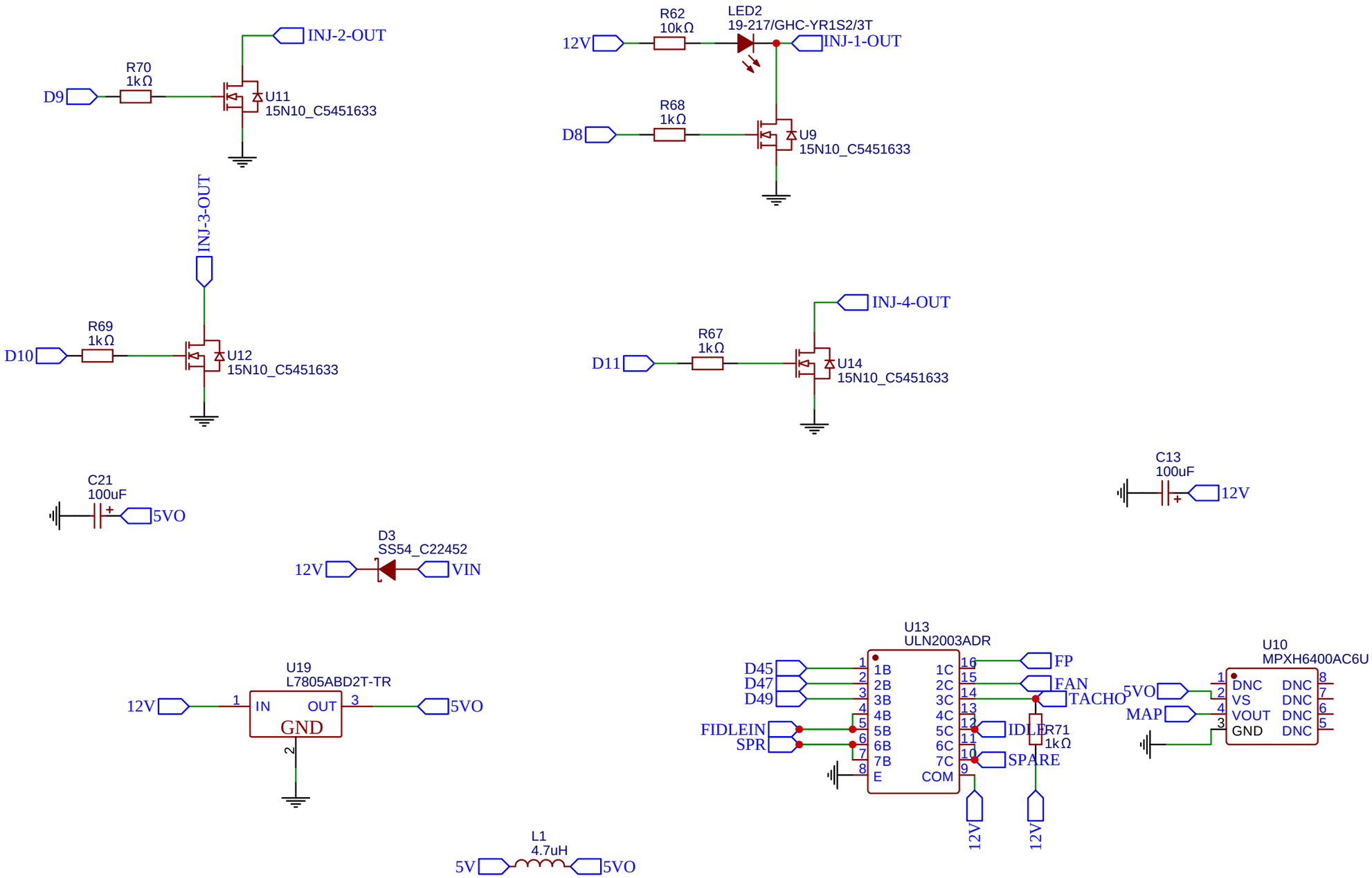

TITLE: Sheet_4	REV: 1.0
EasyEDA — Company: Your Company	Sheet: 1/1
Date: 2024-10-26 Drawn By: jbgs_ch_mex	