USB

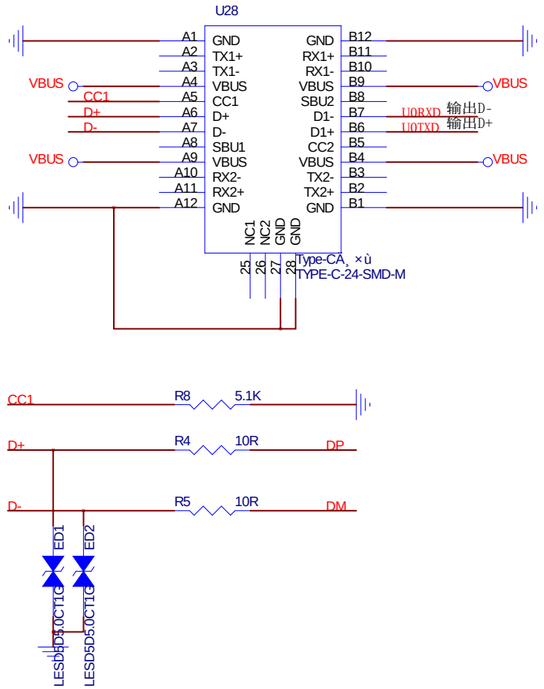

UART

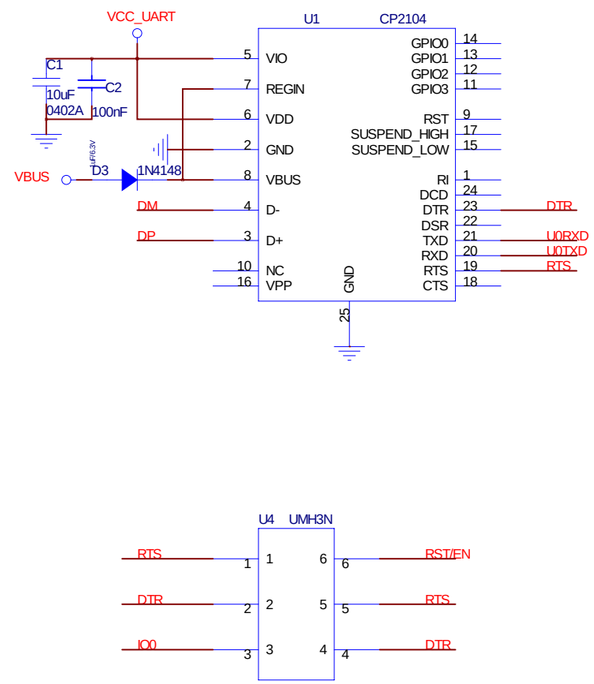

USB

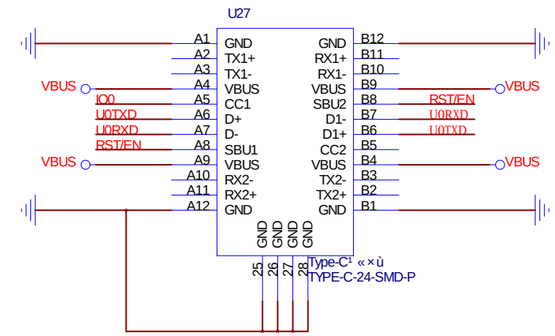

CONNECTOR

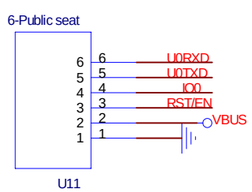

KEY

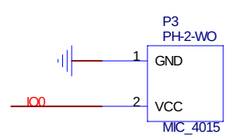

LED

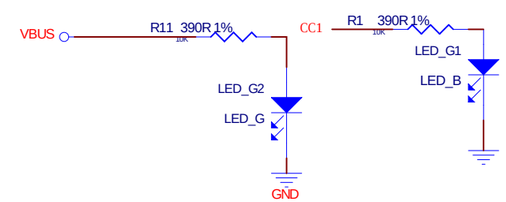

LED_G1亮,U0RXD有效

Title	T85_V3.1	
Size B	Document Number UART	Rev V2.1
Date: Tuesday, November 16, 2021	Sheet 1 of 1	