Nixie_Clock_V1 - Assembly Documentation

3D Views

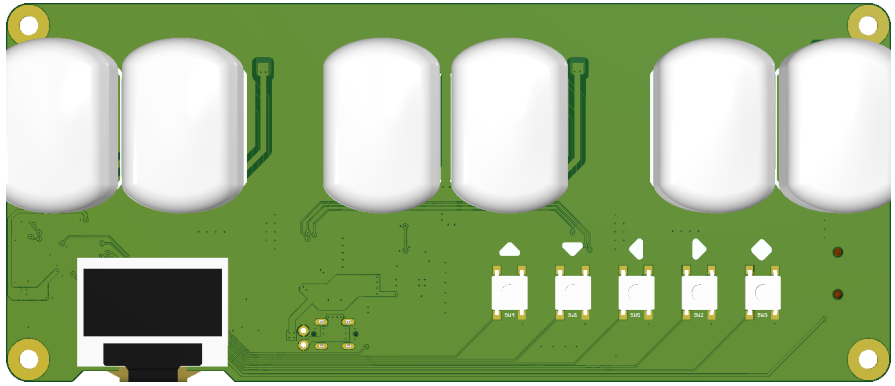

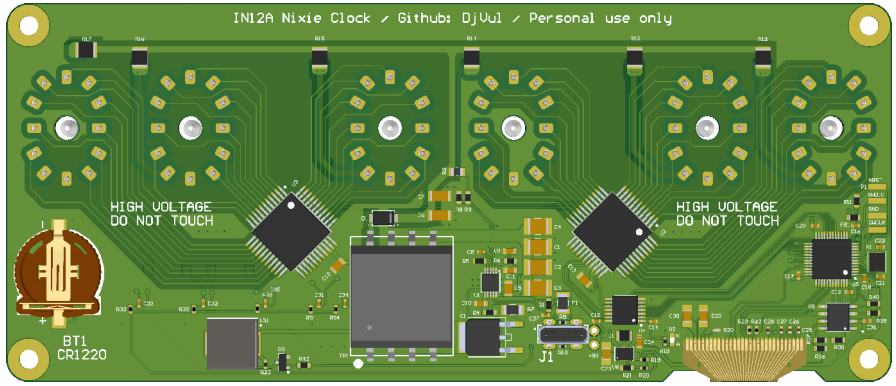

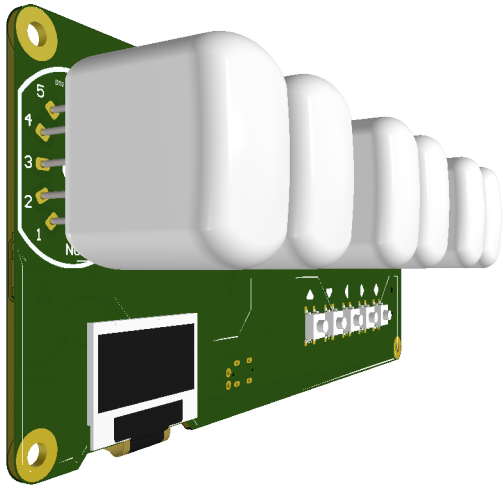

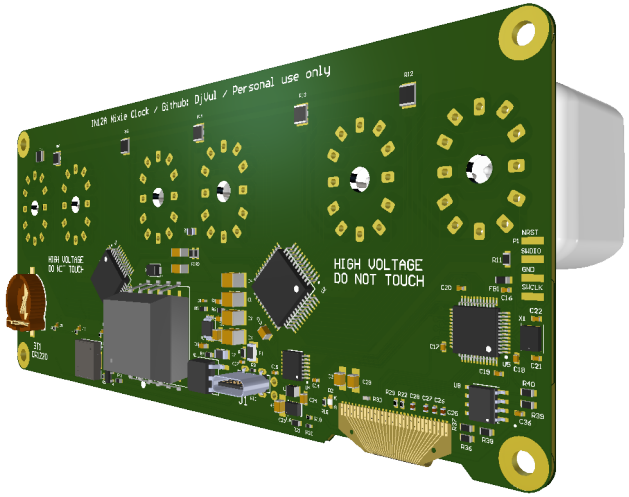

Isometric Views

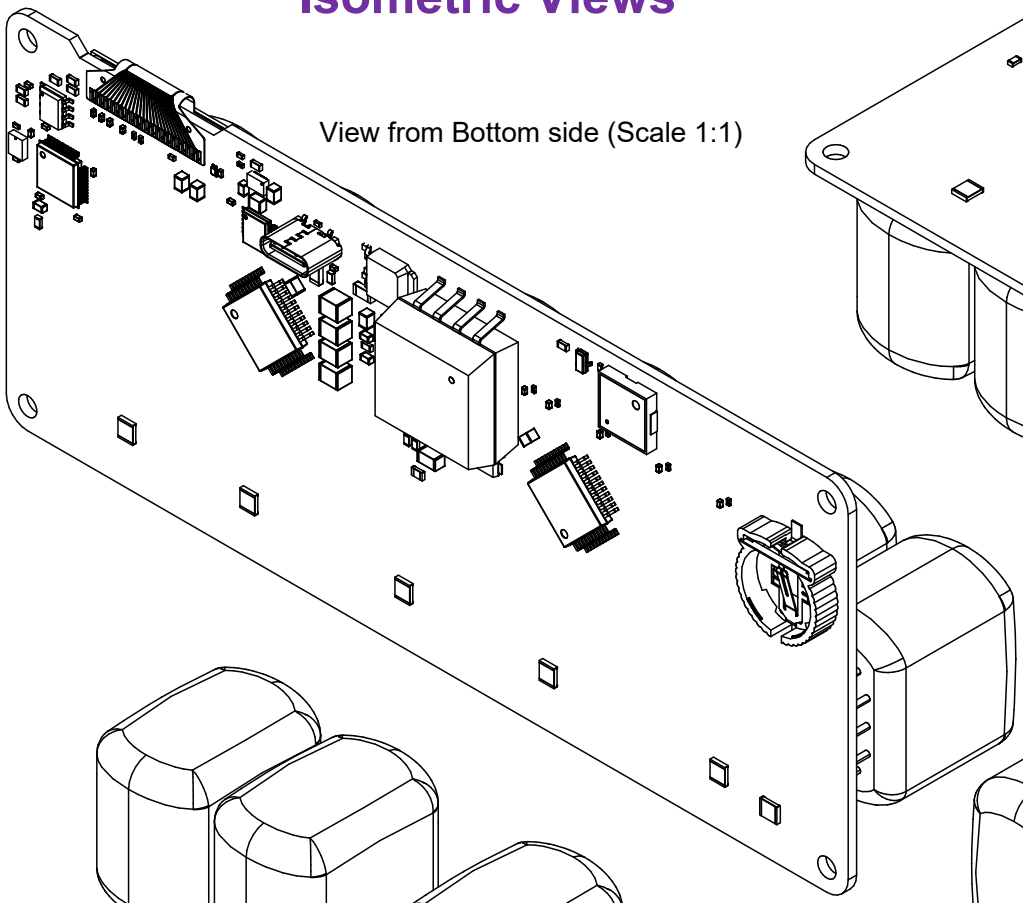

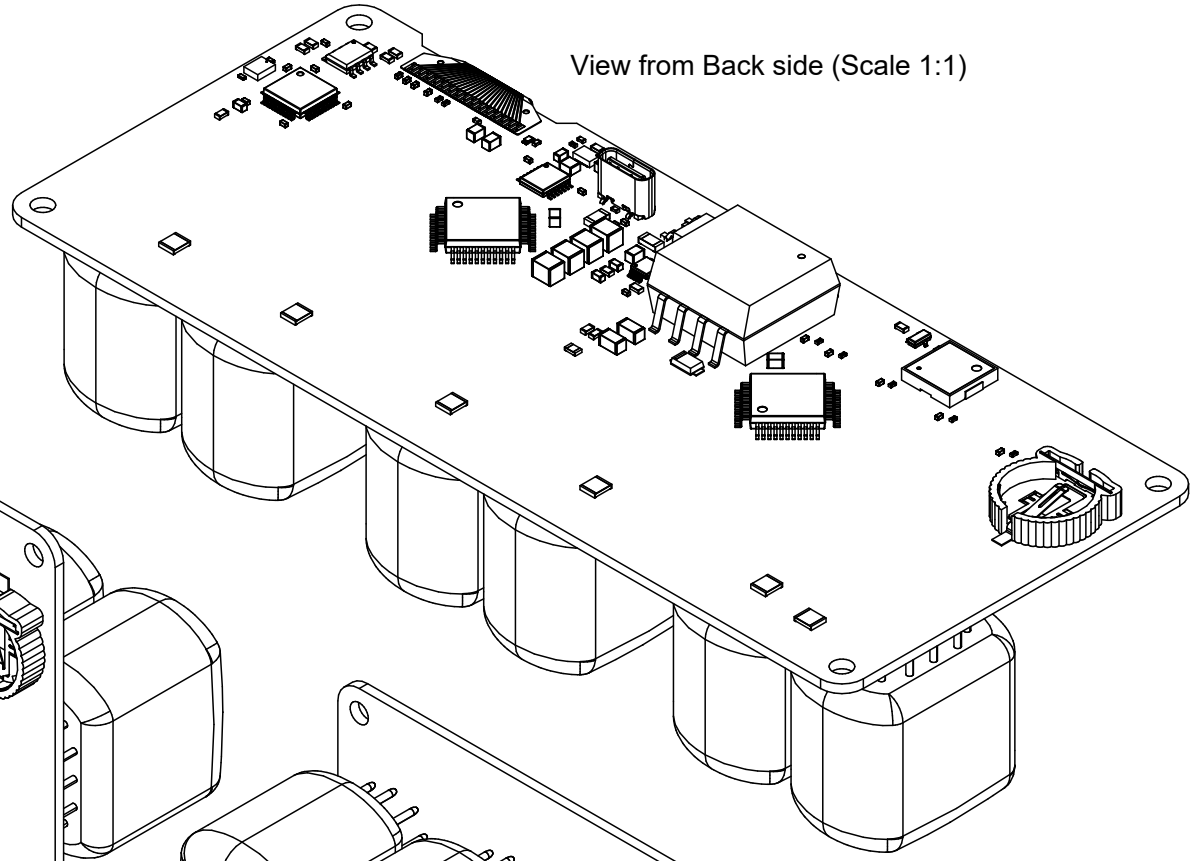

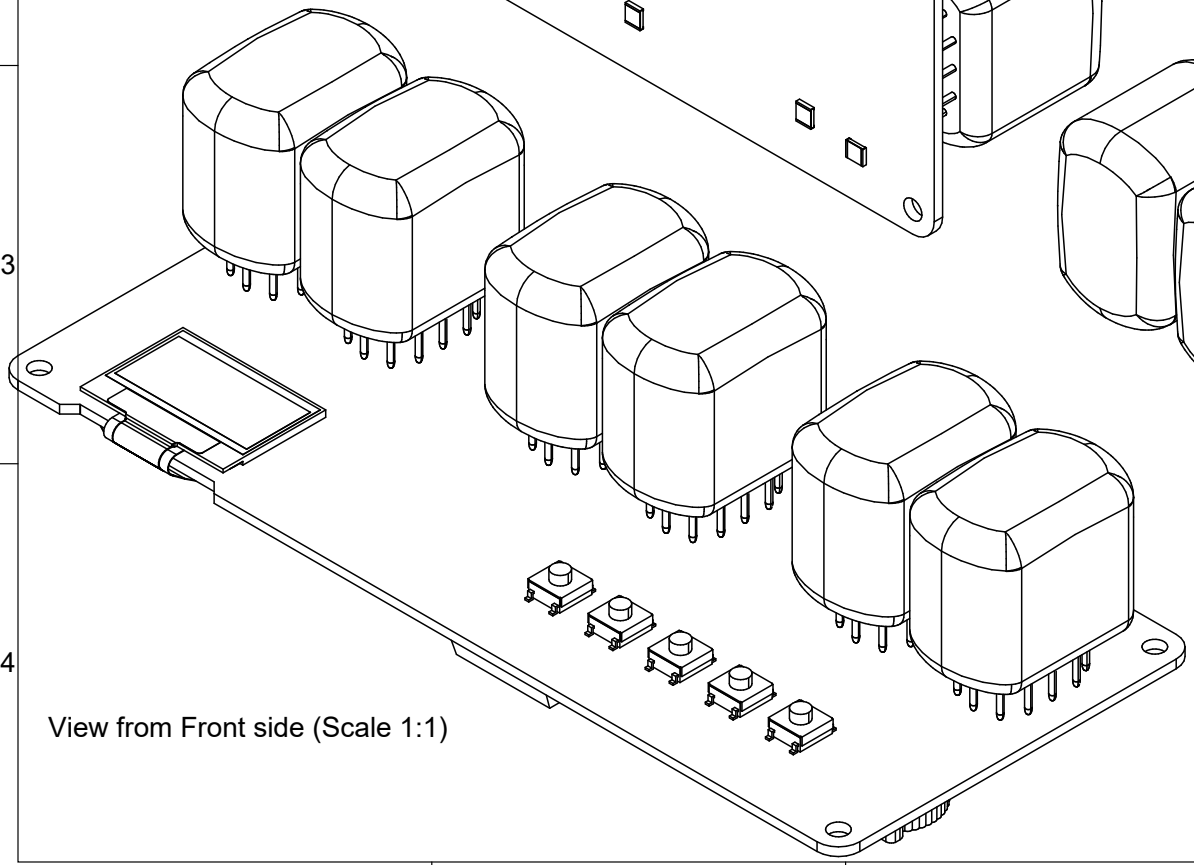

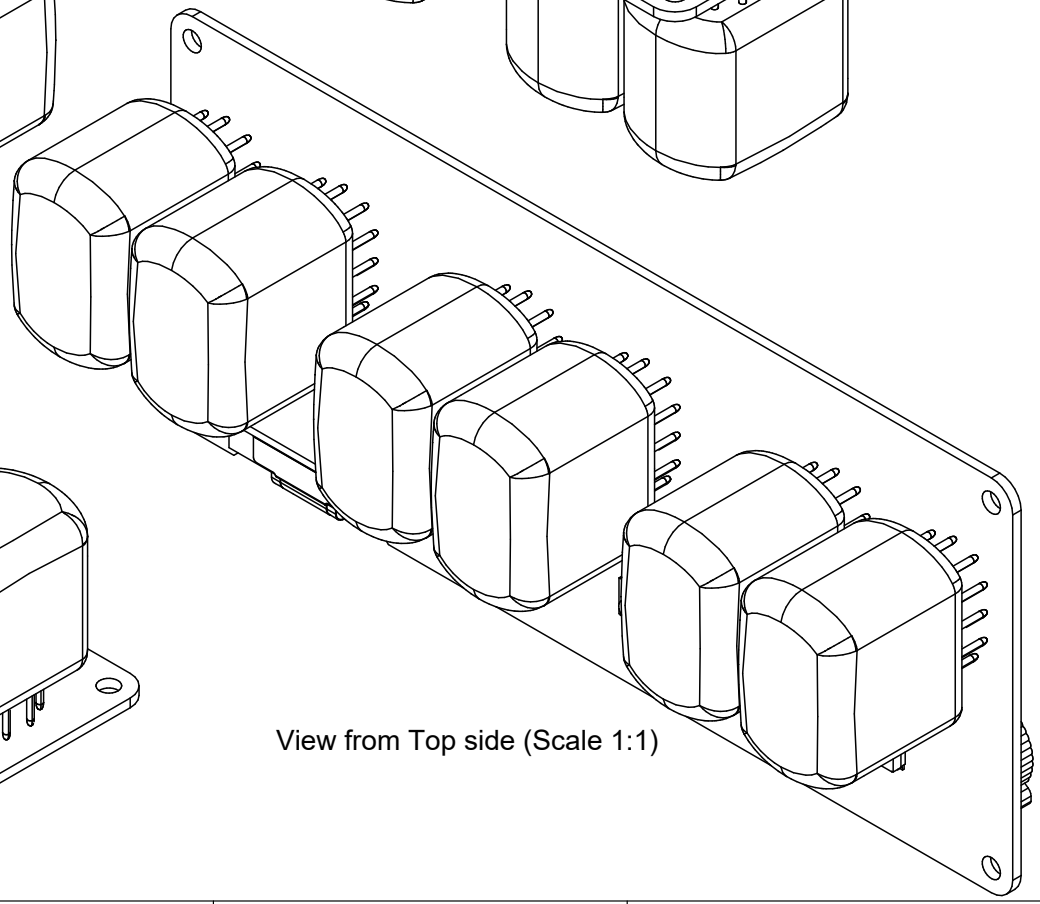

Assembly Bottom

Display U7 solder so when its flipped display side will sit on top layer. Photo as reference *

Expectation of display on Top side

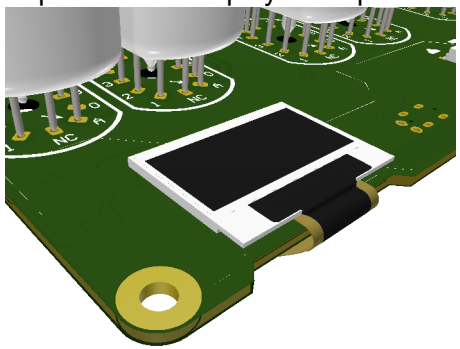

Bottom Side soldering display

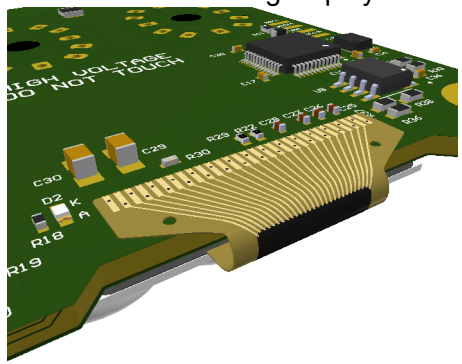

View from Bottom side (Scale 1:1)

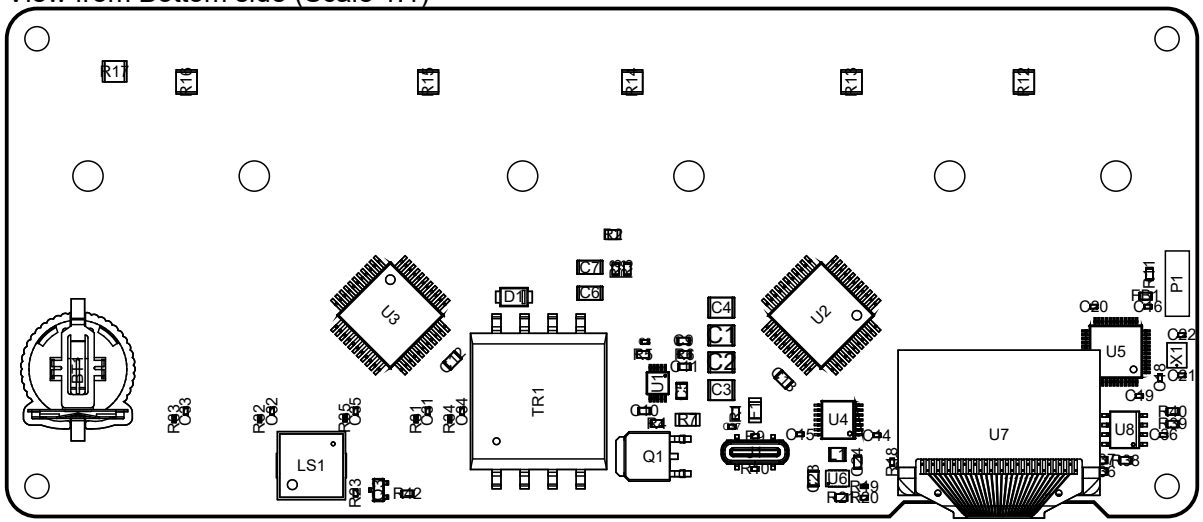

View from Top side (Scale 1:1)

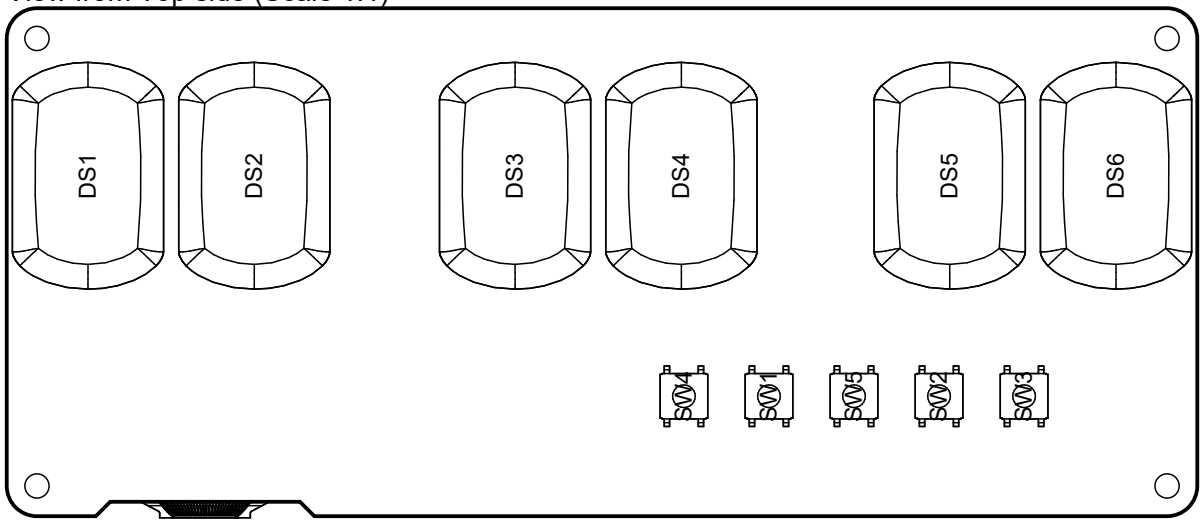

Layer Stack Legend

Use common 2 Layer PCBWAY Stackup 1Oz 1.6mm

Layer Stack Legend

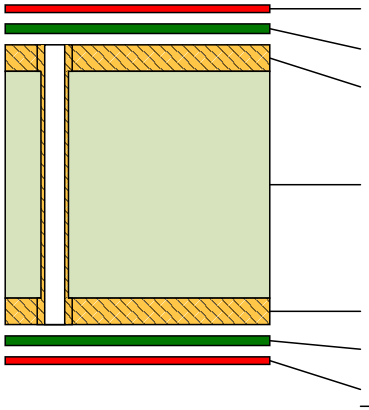

Material	Layer	Thickness	Dielectric Material	Type	Gerber
	Top Overlay			Legend	GTO
Surface Material	Top Solder	0.01mm	Solder Resist	Solder Mask	GTS
Copper	Top Layer	0.04mm		Signal	GTL
Core		*1.50mm*	*FR-4*	*Dielectric*	
Copper	Bottom Layer	0.04mm		Signal	GBL
Surface Material	Bottom Solder	0.01mm	Solder Resist	Solder Mask	GBS
	Bottom Overlay			Legend	GBO

Total thickness: 1.60mm