Title			
Size A	Number		Revision
Date:	3/12/2026	Sheet of	
File:	C:\Users\..\[1]_Nixie_Clock_V1_Overview.SchDoc	Drawn By:	

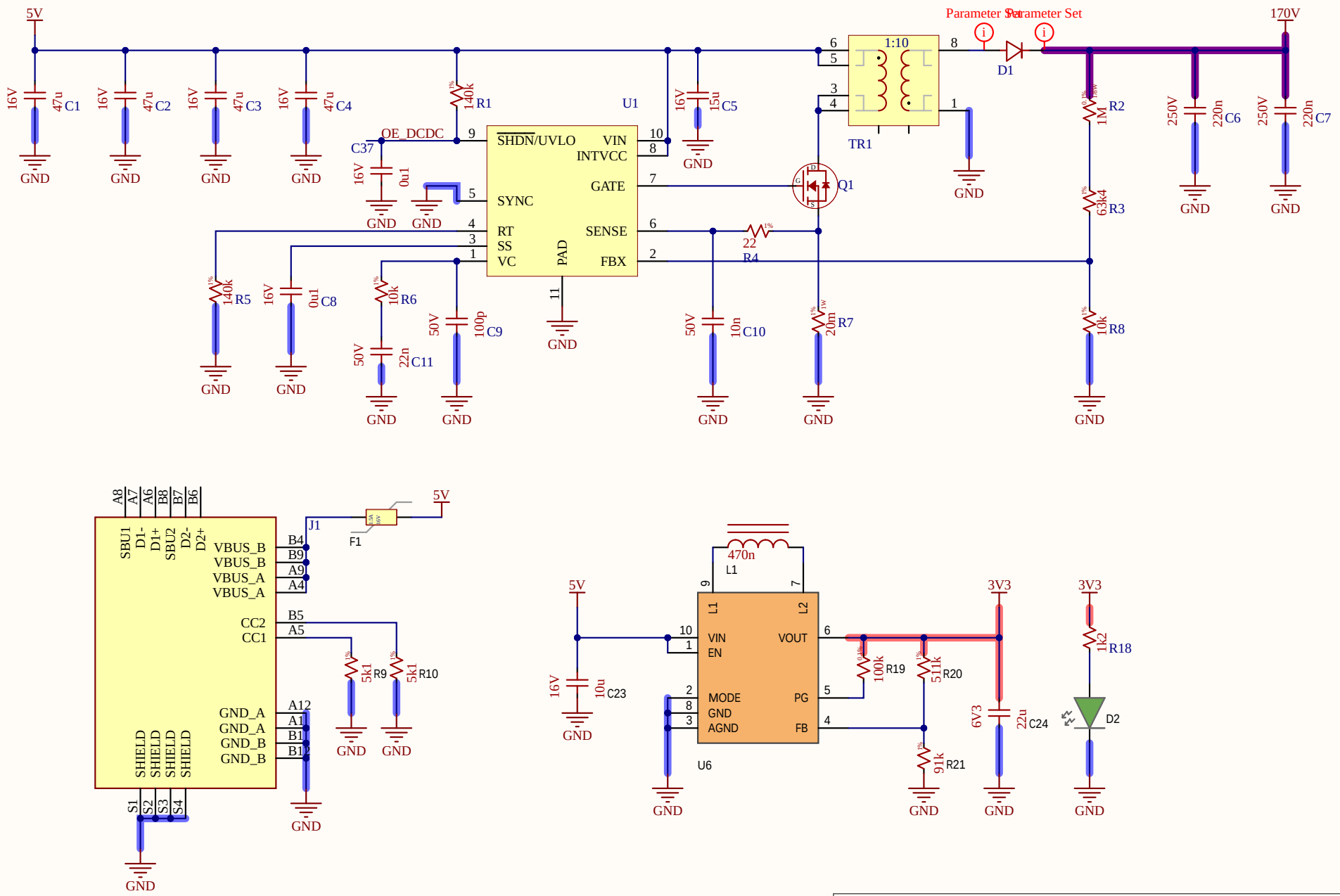

Title		
Size A	Number	Revision
Date: 3/12/2026	Sheet of	
File: C:\Users\..\[2]_Nixie_Clock_V1_Power.SchDoc	Drawn By:	

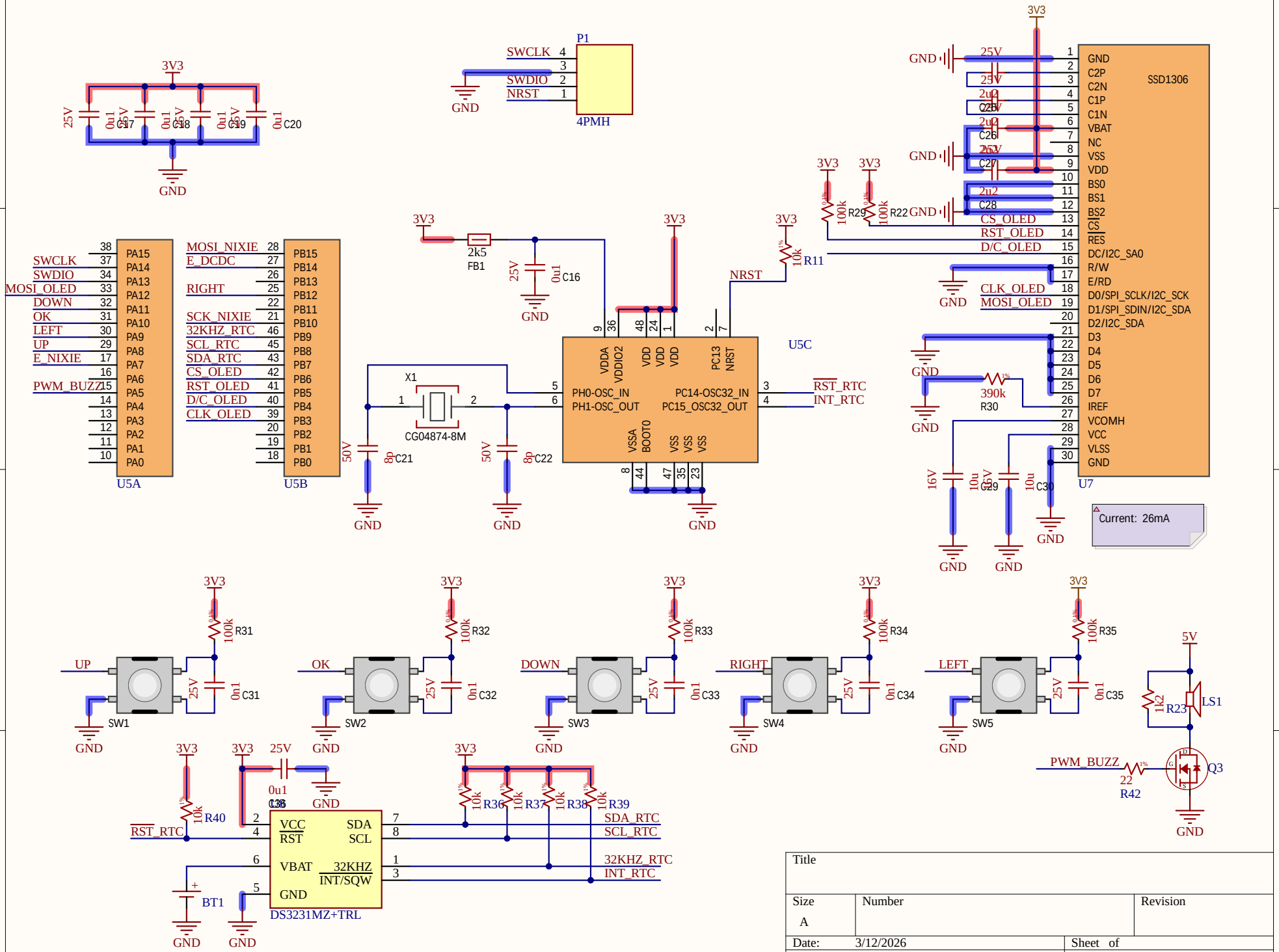
P1
SWCLK
SWDIO
NRST
4PMH
U5A
U5B
U5C
U7
SSD1306
X1
CG04874-8M
FB1
2k5
C16
C17
C18
C19
C20
C21
C22
R11
R22
R29
R30
R31
R32
R33
R34
R35
R40
R42
R23
LS1
Q3
SW1
SW2
SW3
SW4
SW5
UP
OK
DOWN
RIGHT
LEFT
PWM_BUZZ
CS_OLED
RST_OLED
D/C_OLED
CLK_OLED
MOSI_OLED
RST_RTC
INT_RTC
SDA_RTC
SCL_RTC
32KHZ_RTC
BT1
DS3231MZ+TRL
Current: 26mA
Title
Size
A
Number
Revision
Date: 3/12/2026
Sheet of
File: C:\Users\..\[3]_Nixie_Clock_V1_Driver.SchDoc
Drawn By:

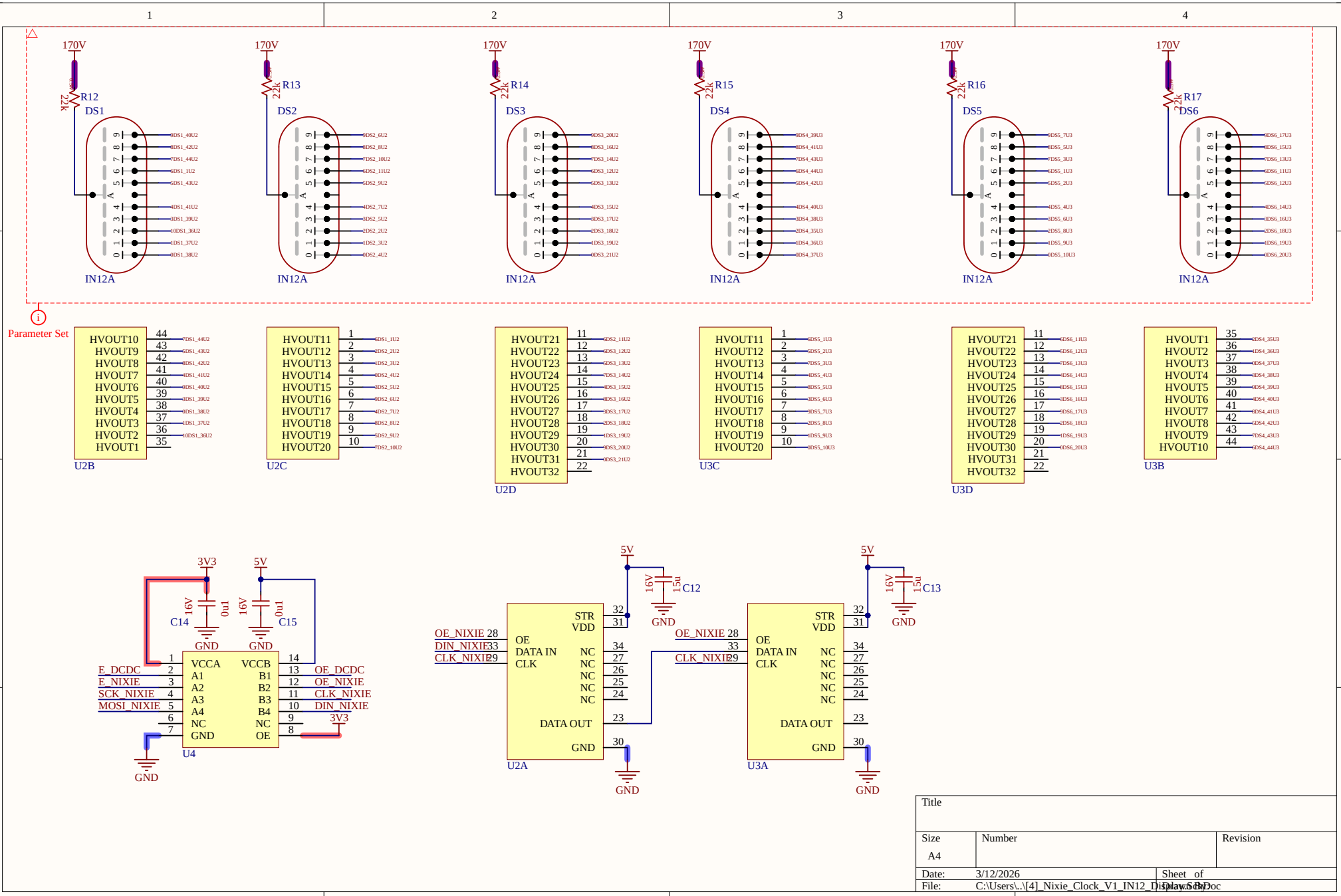

Title		
Size A4	Number	Revision
Date: 3/12/2026	Sheet of	
File: C:\Users\..\[4]_Nixie_Clock_V1_IN12_Display.SchDoc	Drawn by:	

Board Stack Report