Nuclear Instruments and Methods in Physics Research A 607 (2009) 432–438

Contents lists available at ScienceDirect

Nuclear Instruments and Methods in Physics Research A

journal homepage: www.elsevier.com/locate/nima

Temperature behavior of NaI(Tl) scintillation detectors

K.D. Ianakiev [a,*], B.S. Alexandrov [a,b], P.B. Littlewood [c], M.C. Browne [a]

[a] Los Alamos National Laboratory, P.O. Box 1663, Los Alamos, NM 87545, USA
[b] University of New Mexico, Albuquerque, NM 87131, USA
[c] Cavendish Laboratory, Cambridge University, Cambridge, CB30HE, UK

ARTICLE INFO

Article history:
Received 14 May 2006
Received in revised form
29 January 2009
Accepted 3 February 2009
Available online 26 February 2009

Keywords:
NaI(Tl)
Inorganic scintillators
Two decay components
Temperature dependence
Light yield
Linear dependence of light output
Temperature redistribution
Light pulse
Temperature-dependent shape
Step response
Rise-time compensation

ABSTRACT

It is a familiar fact that the total measured light yield of NaI(Tl) detectors is a nonlinear function of temperature. Here we present new experimental data for the temperature behavior of doped NaI(Tl) scintillators that instead shows a linear dependence of the light output over a wide temperature range—including that for outdoor applications. The shape of the light pulse shows, in general, two decay processes: a single dominant process (one decay-time constant) above the room temperature and two processes (two decay-time constants) below the room temperature. We show that the redistribution of the intensities between the two processes is temperature dependent; the second (slow) decay component is negligible at room temperatures, but by −20 °C, it contributes up to 40% of the total light and has a duration of several microseconds. We discuss the profound effect this new understanding of the light output has on the pulse-height analysis instrumentation. We introduce a theoretical model to explain the experimental results. In addition, we describe a unique technique for correcting both amplitude and shape temperature changes inside the NaI(Tl) detector package.

Published by Elsevier B.V.

1. Introduction

The NaI(Tl) scintillator was one of the first gamma detectors used for spectroscopy. Even now, many decades after its establishment, it continues to be the first choice for outdoor gamma spectroscopy because of its combination of modest cost and high reliability. The very complicated process of converting the ionizing energy into an electrical signal causes a complex temperature dependence of the scintillator's light output. Its properties were intensively studied in the 1960s and described in major textbooks and monographs [1,2].

It is a common practice to consider the luminescent response of NaI(Tl) scintillators as a single dominant process with a temperature-dependent decay constant and complex temperature (T) dependence of the fluorescent yield. Typical data for the light-yield temperature dependence are the famous data in the Harshaw catalog [3] and more recent data [4]. The classic understanding of the temperature behavior comes from the three-level theoretical model [1,2,5], which explains the temperature dependence as a consequence of nonradiative transitions between activator levels.

The experimental data for the temperature dependence of the light decay-time constant, presented by different authors [2,4,6], have been fitted to a single component, whose temperature dependence becomes very steep below the room temperature. This is not in agreement with the theoretical model [1], which predicts a smooth change of the time constant over the whole temperature range. The disagreement between the experimental data and the model for the scintillator light yield is even greater. The model calls for a weak monotonic exponential temperature dependence; yet the experimental data for all doped halide scintillators show a broad maximum at room temperature and a steep decline of the light yield below 0 °C. Furthermore, the experimental data from different authors has been inconsistent. To explain the observed nonlinear behavior of the light output for NaI(Tl), an additional function $f(T)$ that represents the probability of occupation of the activation centers has been introduced [2].

The developers of the original detector technology, in fact, observed a secondary light component with a longer time constant [2]. The time dependence of the NaI(Tl) fluorescence was measured precisely at room temperature with the delayed coincidences method [7], and two dominant decay-time

* Corresponding author.
E-mail address: ianakiev@lanl.gov (K.D. Ianakiev).

0168-9002/$ - see front matter Published by Elsevier B.V.
doi:10.1016/j.nima.2009.02.019

components were observed. Because 95% of the total light yield is collected within the first 800 ns, the influence of the second component has been neglected, and the use of shapers with about 1 μs peaking time has been recommended. It is our belief that this recommendation and the desire for higher throughput made a short shaping time (1 μs and below) the common choice for NaI(Tl) detectors.

In recent years, awareness of the impact of signal processing on the temperature drift has increased [8]. Those measurements using a very long shaping time, in fact, showed a nearly linear *T*-dependence of the light output [8], although this attracted no comment, and the physical reasons were not discussed.

The light output of another typical two-component halide scintillator – CsI(Tl) – was extensively studied experimentally and theoretically both in the past [9] and more recently, in light of its use with a photodiode light sensor [10]. The relative intensities and time constants of both fast and slow components were measured over a wide temperature range, and an explanation of the origin of the two components was given [11].

One of us observed the slow component at room temperatures long ago and found it to be a limiting factor for high count-rate applications (e.g., for the spent-fuel attribute test) using NaI(Tl) detectors [12]. A unique preamplifier circuitry with rise time equal to the rise time of the photomultiplier tube (PMT) current pulse and a single-exponential decay-time constant were developed to allow operation at input count rates up to 10^6 cps [13]. Later, the temperature dependence of the light yield of NaI(Tl) scintillators was measured in 1998 in support of work to install a scintillation-detector monitoring system in a BN-350 breeder reactor at Aktau, Kazakhstan. The first public disclosure of the results was a patent application [14] because of increased interest in that problem after the events of September 11, 2001 in the US

In this paper, we present comprehensive experimental data and an outline of a qualitative model explaining the temperature behavior of doped NaI(Tl) scintillators. We outline technical solutions for overcoming the deleterious effects of that behavior. Our study shows linear *temperature* dependence of the NaI(Tl) light output over a wide temperature range, including that for outdoor applications. The normalized shape of the light pulse shows a dual character as follows:

i) A single dominant time constant for the fluorescent decay above the room temperature.
ii) The appearance of a second (slow) component below the room temperature, with a temperature-dependent redistribution of the intensities between the two components.

The second decay component is negligible at room temperatures, but at −20 °C, it produces up to 40% of the total light and lasts for several microseconds. We believe that not taking into account the correct time shape of the light pulse has misled users and developers over the decades. The artificially broad maximum in the light yield comes from a convolution between the finite width of the shaper response function and the temperature-dependent shape of the light pulse. That convolution causes profound temperature dependence of all the characteristics of NaI(Tl) spectrometers.

2. Experimental results

The temperature dependence of the duration of the NaI(Tl) light pulse [6] and the shaping with a peaking time shorter than the total light pulse led us to the idea that the previously reported [3] nonlinear temperature dependence does not describe the total light output. Here we prove that this temperature dependence is an artificial result of the convolution of the light pulse and shaper response. It depends on duration of the PMT current pulse that varies with temperature, and on the finite duration of the shaper response. Therefore, the shaper will not "see" an increasing fraction of the light pulse when the temperature is reduced below 0 °C. This effect is the opposite of the negative temperature coefficient of the light yield caused by nonradiative transitions and thus will cause a temperature dependence with a broad maximum. A shaper with a flat top equal to or longer than the duration of the light pulse will eliminate effects resulting from changes in the temporal dependence of the light emission. The gated integrator (GI) is the simplest and most convenient shaper that can provide a signal proportional to the integrated light emitted. To demonstrate the effect of shaping, we have compared the NaI(Tl) spectrum obtained with semi-Gaussian and GI shapers using a broad range of shaping time constants. In a simple experiment, we placed a standard 2 in. diameter × 2 in. thickness NaI(Tl) detector, Bicron model 2M2/2 with PMT model EMI 9266 in an environmental chamber with the electronics outside the chamber and at room temperature. Thus, the measured temperature effect is the result of temperature dependences of both the scintillation crystal and the PMT. Fig. 1 shows the block diagram of the experimental setup. Standard NIM electronics have been used for the shapers and the multichannel analyzer (MCA), with the exception of the following modifications that provide accurate integration of PMT pulses with microsecond duration:

- The time constant of the anode and the preamplifier decoupling network was increased to more than 50 ms. (The typical value provided by most scintillation detectors' manufacturers is a couple of hundred microseconds.)
- The gate time-out circuitry of the GI (Ortec, mod. 673) was disabled to integrate the whole prefilter pulse. The duration of prefilter pulse is determined by the shaping time of semi-Gaussian prefilters with shaping time constants 0.25 and 3 μs.

The chamber temperature was varied from +50 to −30 °C in increments of 10 °C at a rate of 3 °C/h, and each set of measurements at a given temperature was taken after 8 h of hold time to allow excellent thermal equilibration. We digitized the PMT current pulses with a Tektronix digital scope for each temperature. The response corresponds to excitation around 662 keV with a ^{137}Cs source. To study the effect on pulse shape alone, we normalized all pulses to a unit area as shown in Fig. 2. The pulse-height spectra for each shaper and temperature were recorded and the 662 keV peak position and the full width at half maximum (FWHM) was calculated. The temperature dependence of the light pulse can be explained by redistribution between prompt and delayed components, as measured in [7], rather than

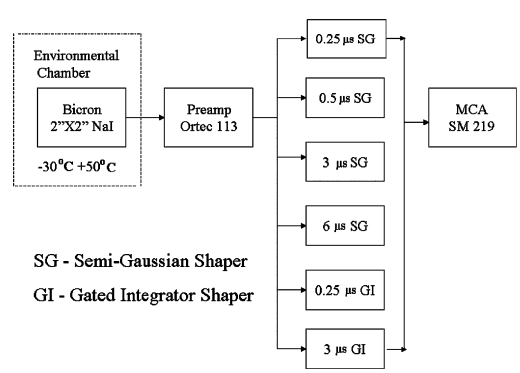

Fig. 1. Block diagram of the experimental setup for measuring the temperature dependence of NaI(Tl) scintillator light output with different shapers.

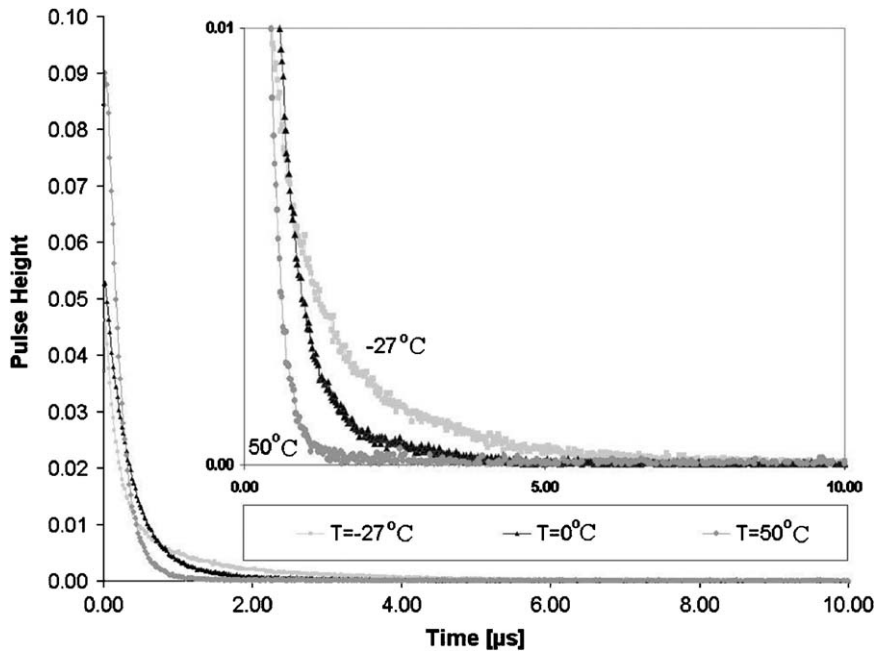

Fig. 2. Current pulses normalized to the total area of the PMT anode for different ambient temperatures. A temperature-dependent redistribution between a fast and a slow component is evident. In the inset, we have expanded the vertical scale.

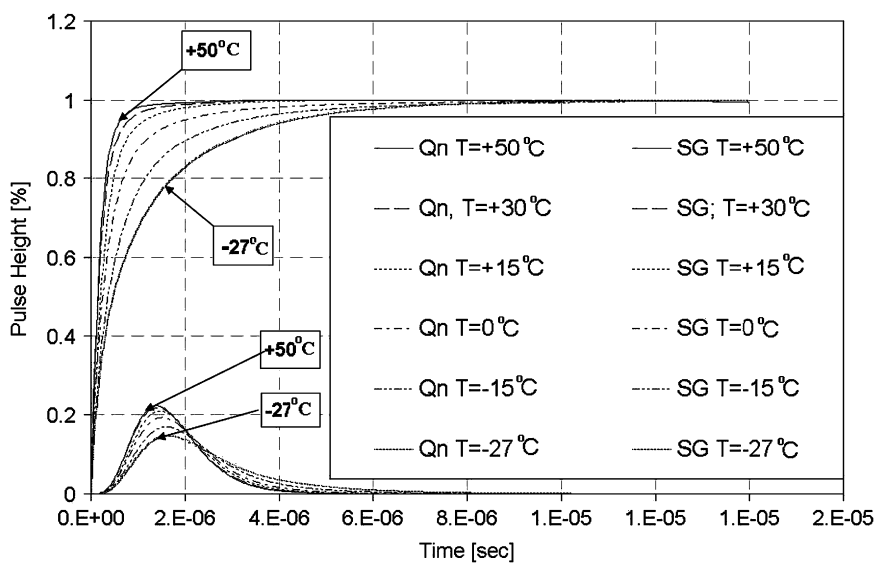

Fig. 3. Simulated responses of the preamplifier (upper) and the 0.5 μs semi-Gaussian shaper (lower) to the normalized charge pulses (integrated current pulses of Fig. 2) for different temperatures. The lower temperatures lead to a longer light response and a longer rise time of the PMT's charge pulse. As a result, the shaper "sees" a smaller and smaller fraction of the light pulse as the temperature decreases. Even with strong temperature dependency of the pulse amplitude, the area under the pulse remains constant. Therefore the gated integrator "sees" the whole light pulse.

by a single temperature-dependent time constant. The slow component is negligible above room temperatures and increases for lower temperatures. Even though the amplitude of the PMT current in the slow component is a negligible fraction of the fast component, the integral contains a substantial part of the total light emission because of its duration. At a temperature of −20 °C, the slow component contains 40% of the total light and lasts many microseconds.

The convolution process is illustrated in Fig. 3 as a numerical simulation of the normalized light pulses in Fig. 2 and the 0.5 μs semi-Gaussian shaper pulse response. The gated integrator response is omitted to simplify the drawing.

Based on the above considerations for effect of the shaper with temperature we consider the data taken with the gated integrator to be the most representative of the scintillator's light output. In order to compare with data published Rozsa et al. [8], we have used the same normalization (to the value corresponding to the middle of measured temperature range). These experimental results, plotted in Fig. 4, represent the combined effect of the temperature dependency of the PMT and the scintillation crystal.

In order to compare the results with those obtained by Rozsa, we have to take into account the temperature drift of the PMT. The Bicron scintillation-detector model 2M2 uses a EMI 9266 PMT with a bi-alkali photocathode and SbCs dynode material with a near constant (total photocathode sensitivity and gain) temperature coefficient for a 420 nm wavelength of about −0.3%/°C [21]. This constant temperature coefficient reduces the calculated slope of the experimental data presented in Fig. 4 down to −0.259%/°C,

which is in good agreement with the quantitative measurements of Rozsa et al. [8]. Valentine et al. [1] obtained a linear temperature dependence for another halide scintillator, CsI(Tl), over an even wider temperature range by measuring the average DC current from the PMT anode. In both of these experiments the PMT was kept at a constant temperature outside the environmental chamber, and therefore they can be used as a quantitative reference.

The effect of using a shaper on the temperature dependence of the 662 keV peak is shown in Fig. 5 where the results of all shapers are plotted together. Here we chose normalization to the maximum temperature (+50 °C) of the measured temperature range because all of the shapers see all of the light at this temperature (95% of the light is collected in first 800 ns at room temperature [7]). Therefore the response of all shapers converges at higher temperatures. The GI plots in Figs. 4 and.5 were generated from the same set of data, but have different slopes because of the different normalization points.

Based on the experimental data in Fig. 5 it is possible to explain the discrepancy between the light output temperature dependency of the old experimental data [3] and the dependency predicted by the Gurney–Mott model [5] as a convolution between the temperature-dependent duration of the scintillator's light pulse and pulse response of the shaper. The measured nearly linear temperature dependency in the higher temperature range is in good agreement with the temperature dependency of the radiative and nonradiative transitions of total light output predicted by Mott and Gurney [5]. The gated integrator being a filter with flattop equal to or greater than the duration of the light pulse integrates the whole light pulse independent of temperature changes in its shape and duration, and thus represents the total light output. We would stress that the response of the GI shaper practically does not depend on the time constant of the semi-Gaussian prefilter (both 0.25 and 3 μs GI have almost identical responses). All other semi-Gaussian shapers will integrate a fraction of the light pulse corresponding to their peaking time and will miss the light released after the pulse maximum. The temperature-dependent redistribution of the light components shown in Fig. 4 bends down the linear dependency toward negative temperatures and causes a broad maximum in the experimental data for 6, 3, 0.5 and 0.25 μs Gaussian shapers. With decreasing shaping time, the temperature characteristic becomes less linear, and its maximum is shifted toward positive temperatures. The peak shift for the 0.25 μs semi-Gaussian shaper with a maximum around +15 °C has the closest shape to the widely used Harshaw data [3]. Based on the above considerations we believe that other curves besides the GI curves have a maximum as a result of the convolution between the scintillator and the instrumental response, and therefore cannot be identified as a property of the scintillator material. This limitation applies also to other type of shapers with flat tops shorter than the duration of the total light pulse and specifically to the bipolar shaper, which is very wide used with scintillation detectors.

The FWHM temperature dependency is much weaker that the pulse-height dependency for two reasons. First, the FWHM for 662 keV energy is determined mainly by the nonlinearity of the NaI(Tl) light output rather than by photoelectrons statistics. Second, the photoelectrons statistics depend on the square root of the light amplitude. We have observed a small dependence of the FWHM on the shaping time for negative temperatures, but it is not important for most applications. While this effect is negligible for medium and high energies, at low energies it is more significant because of spectral interferences and the dominant effect of photoelectrons statistics on the FWHM.

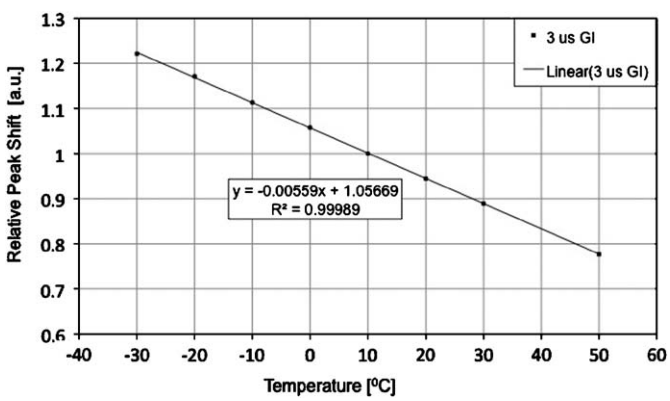

Fig. 4. Combined effect of the temperature dependency of the PMT and the scintillation crystal. The data are normalized to the peak position at +10 °C. The error bars are smaller than the data points. The −0.559%/°C temperature drift is the slope of the linear fit through the data points, and the R^2 factor shows that this is a very good approximation.

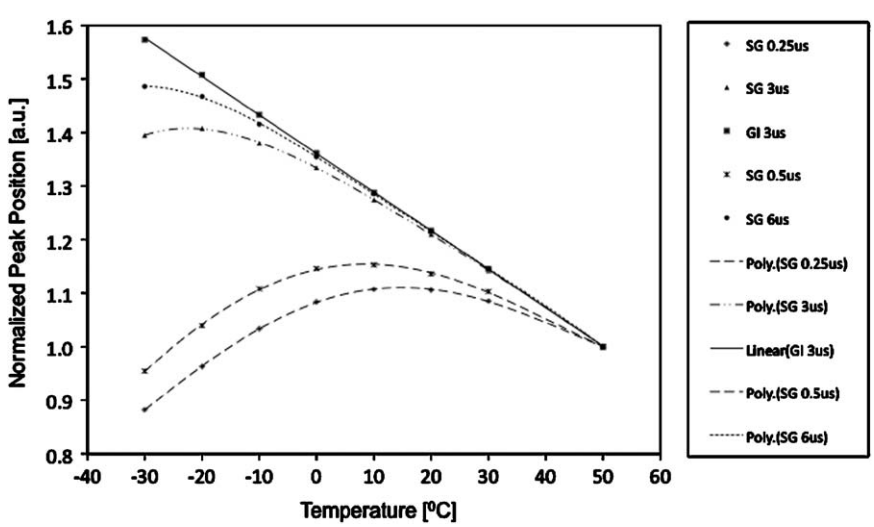

Fig. 5. Temperature dependence of the 662 keV peak of ^{137}Cs measured with different shaping time constants. All of the data is normalized to the 662 keV peak position at +50 °C. The data points for the GI are fitted with straight line, and the data points for the SG shaper, with a fourth-order polynomial.

3. Theoretical model

We introduce a theoretical model for the temperature-dependent behavior of the NaI(Tl) scintillator, based on two dominant pathways of reaching the Tl level in the scintillator, which leads to two effective main components of the light pulse we measured. One can fit the current pulses with 5% accuracy with two effective exponents—one fast, with a time constant of 230 ns; and one slow, with a time constant of about 1 μs. These two effective exponents correspond to the two different processes in the crystal. Both of them are nonexponential by their nature, being compositions of different lifetimes and mechanisms. The physical picture of the processes is explained here briefly on a qualitative level.

In the very beginning of the process, we have the production of electron-hole pairs along the path of the ionizing particle. Because of the very strong coupling between the electron and holes in alkali halide crystals [15], excitons are formed in a mobile exciton band, followed by rapid conversion into self-trapped excitons (STEs) because of the interaction with the ions of the crystal lattice [16]. The fast component of the light emission results from the prompt capture of the STEs by the (Tl^+) level [17].

Note that all of the light emitted (from both slow and fast processes) comes from the same optical transition from the activator level. In our model, the redistribution of the light output arises from a competition between different mechanisms for reaching the activator levels. This redistribution occurs by temperature dependence of the population of the STEs [18]. The temperature dependence exists because the STEs can reach the (Tl^+) levels by thermal-assisted hopping [16] followed by capture and recombination. This process competes with the multiphonon-assisted dissociation of the STEs [19] and transport to the activator level by binary diffusion of independent electrons and holes. In this way, a part of the STEs can "feed" the population of excitons responsible for the fast component of the light output at every temperature. The rest of the STEs, through multiphonon-assisted dissociation, dissociate into electrons and holes. After this multiphonon-assisted dissociation, the separate carriers, by binary diffusion, can reach and be captured by the (Tl^0) center and then recombine [17]. This second mechanism is responsible for the amplitude of the slower component of the light output of the NaI(Tl) scintillator. Fig. 5 shows a schematic of the model, which gives rise to a set of coupled rate equations. A more detailed analysis of this model will appear elsewhere [20].

4. Signal processing of NaI(Tl) light pulses

We have shown that the temperature changes the light-pulse shape and duration in a very wide range, from 1 μs to more than 10 μs at negative temperatures. The variable shape of the signal is much more difficult to handle than the changed amplitude. We have implemented a temperature correction using a GI for linearization of the temperature characteristics [18]. Therefore, we have developed a proprietary technology for the correction of the temperature changes for both the amplitude and shape of PMT current pulses [14]. It is based on the unique property that the weighted sum of a prompt and integrated exponential function is a step function. The solution for a single-exponential component is rather intuitive: a resistor connected in series with the integrating capacitor. The output signal is a sum of the voltages across the resistor–capacitor (*R–C*) network:

$$U_{out} = \frac{Q}{C}\left[1 - e^{-\frac{t}{\tau}}\right] + R\frac{Q}{\tau}e^{-\frac{t}{\tau}}. \tag{1}$$

When $R = \frac{\tau}{C}$, then $U_{out} = \frac{Q}{C}h(t)$, where $h(t)$ is a Heaviside step function. A similar scheme can be applied to two-exponential components' light signals, shown in Fig. 6, where the feedback circuitry consists of two parallel *R–C* networks:

$$I_{SC} = \frac{Q_1}{C}e^{-\frac{t}{\tau_1}} + \frac{Q_2}{C}e^{-\frac{t}{\tau_2}}, \tag{2}$$

where Q_1 and Q_2 are the charges corresponding to two-exponential components; τ_2,τ_1 are the time constants of the fast and slow components. The second network, C–R_2, is connected through a voltage divider providing fraction m of output voltage.

Note that a similar technique has been used to simulate the light response of CsI(Tl) for calibration purposes [22]. The Laplace transformation of the PMT current pulse $I_{sc}(s)$ can be presented as

$$I_{SC}(s) = \frac{Q_1}{\tau_1}\left(\frac{\tau_1}{1+s\tau_1}\right) + \frac{Q_2}{\tau_2}\left(\frac{\tau_2}{1+s\tau_2}\right). \tag{3}$$

The configuration of Fig. 6 provides a step response to the two-exponential-component PMT current pulse.

The Laplace transform of the preamplifier output voltage can be written as

$$U(s) = \frac{Q_1+Q_2}{sC(1+m)}\frac{(1+(Q_1\tau_1+Q_2\tau_2)/(Q_1+Q_2)/(1+s\tau_1)(1+s\tau_2))}{(1+s(R_2C+mR_1C)/(1+m)/(1+sR_1C)(1+sR_2C))}. \tag{4}$$

By selecting the divider value m proportional to the ratio of the light components Q_1, and Q_2 and by selecting R–C values equal to the time constants τ_1,τ_2, we have

$$U(s) = \frac{Q_1+Q_2}{sC(1+m)} \text{ or } U(t) = \frac{Q_1+Q_2}{C}h(t). \tag{5}$$

The technique described above can be used for simultaneous compensation of the two time constants or only one of them. By

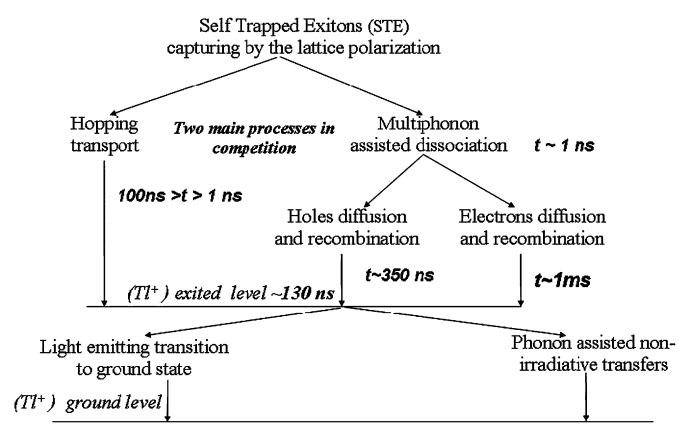

Fig. 6. Scintillation mechanism arising from two pathways for reaching the activator centers.

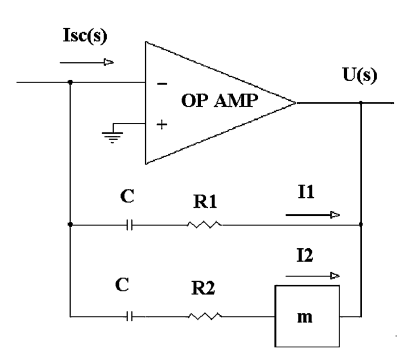

Fig. 7. Step-response preamplifier for two-exponential-component PMT pulse (Q_1,Q_2,τ_1,τ_2).

compensating only the slow component ($R_1 = 0$), the shape of the signal is constant with a rise time less than 1 μs over the temperature range:

$$U(s) = \frac{Q_1 + Q_2}{sC(1+m)} \frac{1}{(1+s\tau_1)}. \tag{6}$$

This allows the use of any MCA and implementation of simple temperature correction in the detector package (14). The exact value of the second component can be measured by using only the first R–C network ($R1$, $C1$), thus compensating the fast component only. This scheme is applicable also for pulse-shape analysis in other two-component scintillators for gamma–neutron separation.

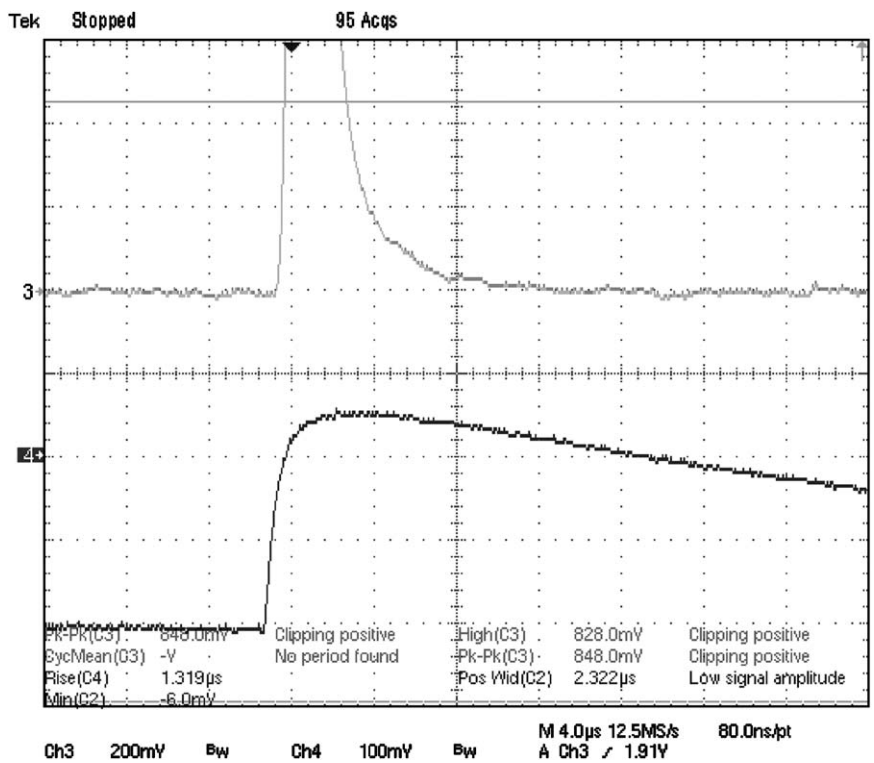

Fig. 8. Pulse from a standard preamplifier and 0.5 μs Gaussian shaper. The horizontal scale is 4 μs per division.

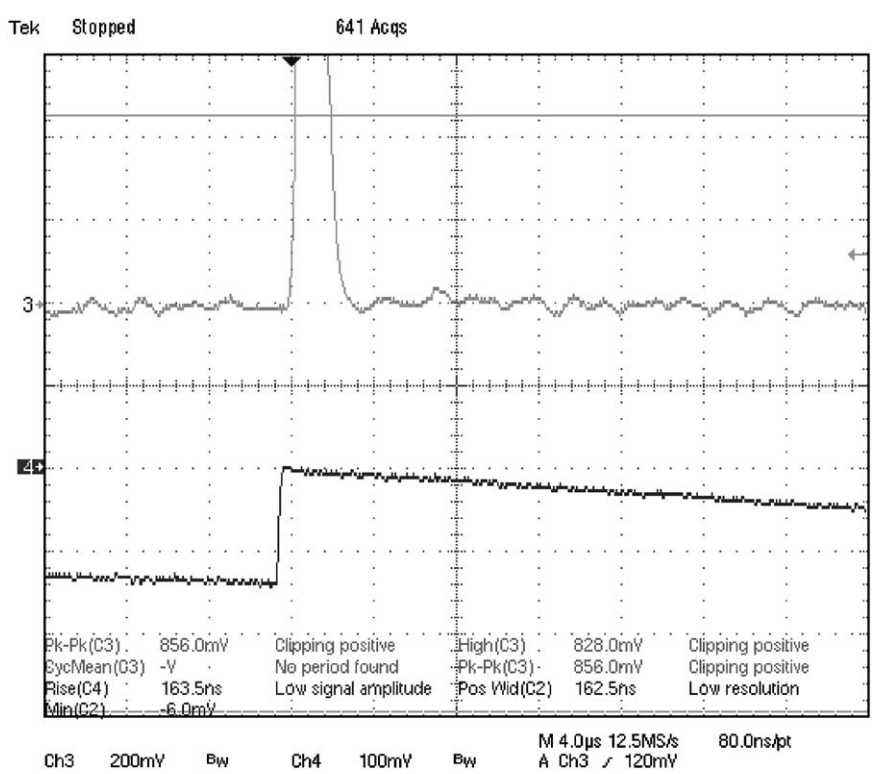

Fig. 9. Pulse from a step-response preamplifier with rise-time correction for pulse at $T = -20\,^{\circ}$C and with a 0.5 μs Gaussian shaper. The horizontal scale is 4 μs per division.

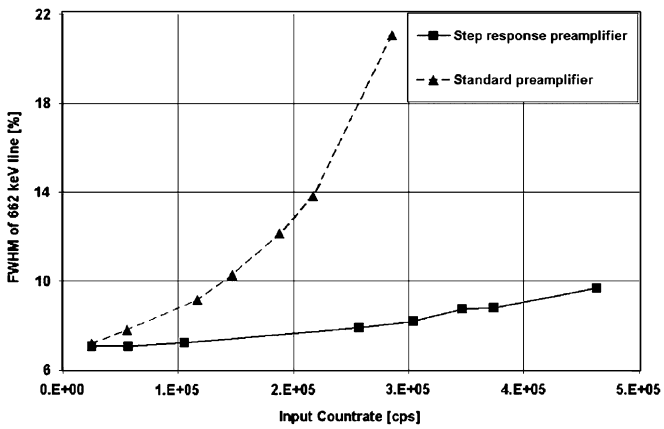

Fig. 10. Count-rate dependence of the 662 keV peak FWHM for standard and step-response preamplifiers. MCA setting: $T_r = 1.2\,\mu s$; $T_f = 0.8\,\mu s$.

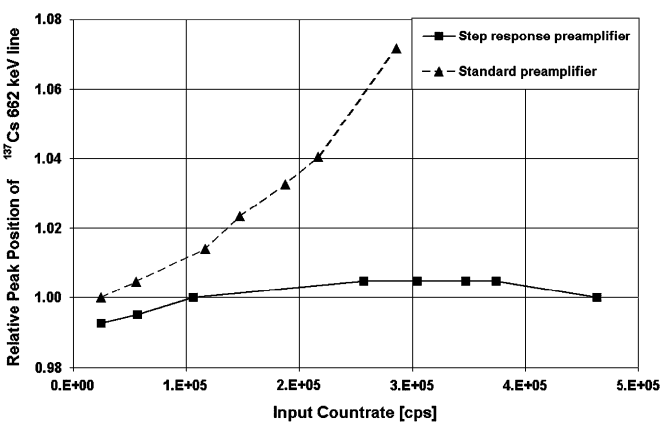

Fig. 11. Count-rate dependence of the 662 keV peak position for standard and step-response preamplifiers. MCA setting: $T_r = 1.2\,\mu s$; $T_f = 0.8\,\mu s$.

As we have mentioned, the most severe temperature effects occur at negative temperatures. Therefore, we present the pulse shapes for corrected and uncorrected preamplifiers taken from a 4 in. × 2 in. × 16 in. Bicron NaI(Tl) detector placed at a temperature of −20 °C, taken with a standard preamplifier (Fig. 7) and a step-response preamplifier with compensated components (Fig. 8)(Fig. 9).

The effect of the rise-time correction on a ^{137}Cs pulse-height spectrum was tested in comparison mode with a standard Ortec 113 preamplifier and a step-response preamplifier connected to a Canberra 2000 DSP MCA. The peak position and FWHM dependence of the count rate are presented in Figs. 9 and 10, respectively. The spectrum deterioration with a standard preamplifier starts at moderate count rates and leads to baseline collapse at count rates above 250,000 cps (Fig. 11).

Providing a temperature-compensated correction of both components over the whole temperature range is complicated and not practical. A simpler compensation of only one of the components, depending on application needs, is more practical. For example, a temperature compensation of the long component could prevent collapsing of the baseline restorer. A temperature compensation of the fast component, and thus the elimination of the temperature dependence of the counting information due to unrecognized pileup, are critical for UF_6 enrichment measurements and will be presented elsewhere.

5. Conclusions

We have observed the temperature dependence of NaI(Tl) light output as a temperature-dependent redistribution between fast and slow components. The slow component is negligible at room temperature, but it includes a substantial fraction of the total light output at temperatures below 0 °C. We measured a linear temperature dependence of the fluorescent yield of NaI(Tl) scintillators in the outdoor temperature range when the total light pulse is integrated. The broad maximum in the previously published data is thus explained as a convolution between the temperature-dependent shape of the light pulse and the shaper response; therefore, only the linear temperature dependence can be considered as a property of the scintillator material. Our theoretical model explains the above behavior as arising from two competing processes (exciton hopping and binary diffusion) to reach the activation centers. A proprietary technique that compensates for the temperature dependence of the light pulse has been developed. It provides a step response or single-exponential rise time of the preamplifier output, thus compensating for the redistribution between the slow and fast components. This technique will improve the high count-rate performance of NaI(Tl) scintillation detectors and mitigate the temperature effect on the shape of the light pulse.

Acknowledgments

The authors would like to thank Cal Moss for many constructive discussions and suggestions.

References

[1] Glenn F. Knoll, Radiation Detection and Measurement, Wiley, New York, 1999.
[2] J. Birks, The Theory and Practice of Scintillation Counting, Pergamon Press, Oxford, UK, 1964.
[3] The Harshaw Catalog of Optical Crystals, Harshaw Chemical Company, Solon, Ohio, 1967.
[4] C.L. Melcher, IEEE Trans. Nucl. Sci. NS-35 (1) (1988).
[5] N.F. Mott, A. Gurney, Trans. Faraday Soc. 35 (69) (1939).
[6] J.S. Schweitzer, et al., IEEE Trans. Nucl. Sci. NS-30 (1) (1983).
[7] L.M. Bollinger, G.E. Thomas, Rev. Sci. Instrum. 32 (1961).
[8] C. Rozsa, C. Grodsinsky, D. Penn, P. Raby, R. Schreiner, Bicron, Newbury Nuclear Science Symposium, 1999. Conference Record. (1999) IEEE.
[9] R. Gwin, R.B. Murray, Phys. Rev. 131 (1963) 501.
[10] J. Valentine, et al., Nucl. Instr. and Meth. A 325 (1993) 147–157C.L.
[11] R.B. Murray, IEEE Trans. Nucl. Sci. NS 22 (1975).
[12] K. Ianakiev, R. Arlt, personal communication on improving pile-up rejecter of PMCA Davidson 2054-4k.
[13] K. Ianakeiv, T. Grigorov, IAEA consultant agreement for upgrade of PMCA NaI(Tl) spectrometer. Final Report, February 1992.
[14] K.D. Ianakiev, M.C. Browne, J. Audia, W. Hsue, Apparatus and method for temperature correction and expanded count rate of inorganic scintillation detectors, US Patent no. 7, 081, 626, July 2005.
[15] W.J. Van Sciever, 1955 High Energy Physics Report, 38, Stanford University, 1955.
[16] H. Nishimura, S. Nagata, J. Lumin. 4041 (1988) 429.
[17] H.B. Dietrich, A.E. Purdue, R.B. Murray, R.T. Williams, Phys. Rev. B 8 (1973) 5894.
[18] B.S. Alexandrov, J. Audia, M.C. Browne, K. Ianakiev, H. Nguyen, P. Reass, R. Parker, in: Proceedings of the INMM 46th Annual Meeting, Phoenix, Arizona, July 2005, Los Alamos National Laboratory document LA-UR-05-4933.
[19] B. Goodman, O.S. Oen, J. Phys. Chem. Solids 8 (1959) 291.
[20] B.S. Alexandrov, K. Ianakiev, P. Littlewood, Nucl. Instr. and Meth. A 586 (3) (2008) 432.
[21] Electron Tubes Enterprises, Technical brochure "Understanding Photomultipliers," p 17.
[22] J. Valentine, V. Jordanov, D. Wehe, G. Knoll, Nucl. Instr. and Meth. A 325 (1992).