Nuclear Instruments and Methods in Physics Research A 607 (2009) 322–333

Contents lists available at ScienceDirect

Nuclear Instruments and Methods in Physics Research A

journal homepage: www.elsevier.com/locate/nima

Controlling FAMA by the Ptolemy II model of ion beam transport

R. Balvanović [a,*], B. Rađenović [b], P. Beličev [a], N. Nešković [a]

[a] Vinča Institute of Nuclear Sciences, P.O. Box 522, Belgrade 11001, Serbia
[b] Institute of Physics, Pregrevica 118, Belgrade 11080, Serbia

ARTICLE INFO

Article history:
Received 22 December 2008
Received in revised form
6 April 2009
Accepted 12 May 2009
Available online 31 May 2009

Keywords:
Model
Ion beam transport
Control
Hierarchical heterogeneity
Ptolemy II

ABSTRACT

FAMA is a facility for modification and analysis of materials with ion beams. Due to the wide range of ion beams and energies used in the facility and its future expansion, the need has arisen for faster tuning of ion beams transport control parameters. With this aim, a new approach to modeling ion-beam transport system was developed, based on the Ptolemy II modeling and design framework. A model in Ptolemy II is a hierarchical aggregation of components called *actors*, which communicate with other actors using *tokens*, or pieces of data. Each ion optical element is modeled by a composite actor implementing beam matrix transformation function, while tokens carry beam matrix data. A basic library of models of typical ion optical elements is developed, and a complex model of FAMA ion beam transport system is hierarchically integrated with bottom-up approach. The model is extended to include control functions. The developed model is modular, flexible and extensible. The results obtained by simulation on the model demonstrate easy and efficient tuning of beam line control parameters. Fine tuning of control parameters, due to uncertainties inherent to modeling, still has to be performed on-line.

© 2009 Elsevier B.V. All rights reserved.

1. Introduction

The facility for modification and analysis of materials using ion beams (FAMA) is situated in the Laboratory of Physics of the Vinča Institute of Nuclear Sciences, Belgrade, Serbia as described in Ref. [1]. Presently, it consists of the M1 machine and C2 channel for surface modification of materials, shown in Fig. 1. The future extension of the facility will comprise the light-ion source M2 and three more experimental channels, C1, C3, and C4. The machine M1 consists of an ECR ion source and 2 m long beam line with a solenoid lens, a magnetic quadrupole lens and an analyzing magnet. The channel C2 consists of an 8.5 m long beam line with two electrostatic quadrupole triplets and an analyzing magnet. The line ends with an interaction chamber IC.

The M1 machine was not yet commissioned at the time the channel C2 was designed, so the emittances of delivered beams were underestimated and did not match well the acceptance of C2 channel. This led to low overall coefficients of beam transmission, ranging from 10% to 30%. Biasing potentials of quadrupoles of the C2 transport line were afterwards numerically improved for 60 kV N^{4+} ions, as shown in Ref. [2]. Despite this improvement, the need existed for developing a new model of ion beam transport, for several reasons: (a) tuning of transport control parameters, such as the currents through magnetic elements and the potentials across electrostatic elements, (b) integration of beam parameters calculation, visual representation, and beam diagnostics in a single framework, and (c) operator training.

Our aim was to take a step towards the integration of the particle beam optics model into the control system. In developing control systems, the first task is to model the object to be controlled and then to model the controller that controls the object. The object model and the controller model are then integrated, if possible within the same software framework. Such models are generally complex and heterogeneous. This complexity is best dealt with using a hierarchical architecture, because it enhances flexibility, scalability and reliability of the model by combining its components in a disciplined manner. Using the Ptolemy II as the modeling framework of choice, we developed the charged particle beam optics model of FAMA, and integrated into it some of its control functions.

The object model is the part of the model that governs the particle beam optics of FAMA. The control functions integrated into the model are the basic commands used by the FAMA operator to transport the beam from the ion source to the target. They represent the settings of currents and voltages across electromagnetic optics elements, to control their respective electromagnetic fields that in turn control the actual beam transport. The entire model is executable and one execution

* Corresponding author. Tel.: +381 11 2447700; fax: +381 11 2447963.
E-mail address: broman@vinca.rs (R. Balvanović).

0168-9002/$ - see front matter © 2009 Elsevier B.V. All rights reserved.
doi:10.1016/j.nima.2009.05.181

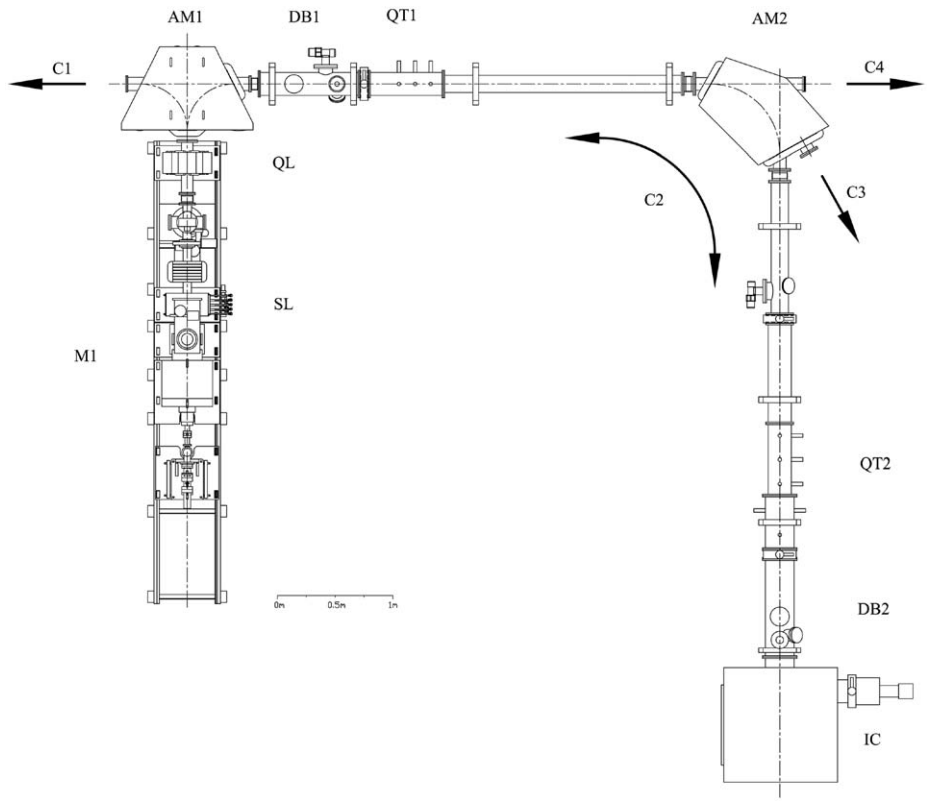

Fig. 1. FAMA, at present, consists of the machine M1 and the channel C2. SL—the solenoid lens, QL—the magnetic quadrupole lens, AM1—the analyzing magnet, QT1 and QT2—the electrostatic quadrupole triplets, AM2—the analyzing magnet, IC—the interaction chamber, DB1 and DB2—the diagnostic boxes.

displays the beam envelopes, phase-space ellipses and a single ray trace. All the displays are plotted immediately after the model execution.

What distinguishes our approach from the common beam modeling codes such as TRANSPORT, TRACE 3-D or TURTLE, is its intended use. The mentioned codes are primarily used for the design of particle beam transport systems and the characterization of particle beams. The Ptolemy II approach is intended for the integration of the particle beam transport modeling into the control systems used to control particle beam transport facilities. The other major distinctive feature of the used modeling framework and the resulting model is its inherent heterogeneity, or the possibility to implement different models of computation within the same model.

2. Ptolemy II modeling framework

Most modeling frameworks are not flexible in the sense that they fix a single model of computation (MoC). The model of computation is an abstraction of computational execution. Evolution of a model is potentially restricted by this inability to change the MoC. It is also useful to have heterogeneous models, i.e. models that simultaneously implement different MoCs. Ptolemy II enables building heterogeneous models with different MoCs by mixing them in a hierarchical structure. Since modeling ion beam transport systems can, in principle, present a complex and heterogeneous problem, Ptolemy II was the selected modeling framework of choice.

Ptolemy II is a software environment developed as a part of the Ptolemy Project at the University of California, Berkeley, USA. It is a framework intended for modeling concurrent, heterogeneous systems. Its key feature is the use of different models of computation and mixing them using hierarchical abstraction, as explained in Ref. [3]. Ptolemy II is a well-suited environment for modeling, simulation and development of concurrent, embedded real time systems. It is also used in a growing number of applied physics applications, notably in the IceCube neutrino experiment described in Ref. [4].

A model in Ptolemy II is composed of hierarchically aggregated components called *actors*, the basic building blocks of a model. These actors are executable concurrent modules. They can be either *atomic*, which lie at the bottom of the hierarchy, or *composite*, which contain other actors. The composite actor can be contained by other composite actor. This nested compositionality enables a hierarchy of models. The actors communicate through their *ports*. A port can be input, output, or both. By linking ports together, communication channels are created.

The way actors execute and communicate is defined by their *domain*. In Ptolemy II, the domain is the implementation of the model of computation associated with a composite actor. The domain is implemented by *director* and *receiver* classes [5]. Directors define a set of component execution and communication rules, giving the model its *semantics*. Receivers define the communication mechanism, and are contained in input ports. Each communication channel contains one receiver representing, for example, FIFO queues, mailboxes or rendezvous points. The composite actor that does not have a director is called a *transparent composite actor*, and the one that has a director is called an *opaque composite actor*.

Ptolemy II implements a rich and growing library of domains suitable for a variety of applications. Continuous time (CT), Discrete event (DE), Dataflow, Finite State Machines (FSM) and Real Time Operating System (RTOS) domain, are most often used

in modeling control applications, as discussed in Ref. [6]. Process Networks (PN) and Synchronous Dataflow (SDF) belong to Dataflow models. What makes these domains fundamentally different is their notion of time [7]. Time in these domains can be *continuous* (as in CT domain), *discrete* (DE), or *abstract* (PN, SDF).

A principle of the Ptolemy project is that the efficacy of a model depends on the choice of the model of computation selected for modeling. Liu at al. in Ref. [8] argue that dataflow models of computation are well suited for modeling control systems, because software processes and control algorithms can be conveniently specified in a dataflow paradigm. In dataflow models, actors compute their output data streams from input data streams. Their notion of time is abstract, and takes into account only the relative order of events in the system. Dataflow models are well suited for modeling signal processing. A Synchronous Dataflow domain is a special case of a Process Network domain. While PN domain processes communicate through buffered messages using asynchronous message passing, the actors in SDF consume a fixed amount of data on each firing. This restriction results in a useful property of SDF models allowing deadlock and boundedness to be computed statically, before the model execution.[1] Consequently, SDF models have a predictable and efficient execution for models with fixed structure. The model of FAMA is for these reasons implemented in a SDF domain. The model is built using Vergil, a Graphical User Interface (GUI) for Ptolemy II.

3. Model of FAMA

3.1. Transfer matrices and hierarchical structure of the model

The ion beam transport described by first-order transfer matrix formalism with no space charge effect is implemented in the model. Six-dimensional phase space is reduced to four-dimensional x, x', y, y' phase space. A right-handed coordinate system (x, y, z) is used, where xy is the transverse plane to the particle propagation. In the phase space, x and y are the horizontal and vertical displacements of the arbitrary trajectory with respect to the reference trajectory. In the paraxial approximation used in the model, $x' = \mathrm{d}x/\mathrm{d}z$ and $y' = \mathrm{d}y/\mathrm{d}z$ are the angles in horizontal and vertical planes the arbitrary trajectory makes with the reference trajectory.

The position of an arbitrary particle in four-dimensional phase space is represented by a four-dimensional coordinate vector

$$\mathbf{X} = \begin{bmatrix} x \\ x' \\ y \\ y' \end{bmatrix} \tag{1}$$

The position of the particle after passing through an ion optical element is given by

$$\mathbf{X}(1) = \mathbf{R}\mathbf{X}(0) \tag{2}$$

where $\mathbf{X}(0)$ and $\mathbf{X}(1)$ are the initial and the final coordinate vectors of the particle passing through the ion optical element, respectively. The transfer matrix $\mathbf{R}$ describes the transformation of particle trajectory passing through the element.

A group of particles, or an ion beam, is represented in a four-dimensional phase space by its four-dimensional beam ellipsoid. The equation of the beam ellipsoid is given by the formula

$$\mathbf{X}^T\boldsymbol{\sigma}^{-1}\mathbf{X} = 1 \tag{3}$$

where $\mathbf{X}^T$ is the transpose of the vector $\mathbf{X}$ and $\boldsymbol{\sigma}$ is a symmetric, real, positive-definite 4×4 matrix called the beam matrix. After the beam passes through the ion optical element, the beam matrix transforms into

$$\boldsymbol{\sigma}(1) = \mathbf{R}\boldsymbol{\sigma}(0)\mathbf{R}^T \tag{4}$$

In the Synchronous Dataflow domain, actors communicate by sending and receiving fixed amount of tokens, or pieces of data. Actors read input tokens, process them, and send them over communication channels to other actors for processing. In our model, an ion optical element is viewed as a transformer of the beam $\boldsymbol{\sigma}$ matrix; so it is modeled by an actor that makes the relevant transformation of the beam $\boldsymbol{\sigma}$ matrix. The actor receives a $\boldsymbol{\sigma}(0)$ matrix on its input, transforms it according to Eq. (4), and produces a transformed $\boldsymbol{\sigma}(1)$ matrix as its output. This implies that tokens that are processed by the model have to encapsulate the beam $\boldsymbol{\sigma}$ matrix.

In addition to this basic functionality of the ion optical element model, the coordinate vector calculation is integrated in the same actor implementing Eq. (2), to facilitate modeling the trajectory. The ion optical element model thus simultaneously calculates propagation of the defined beam and the selected particle within it.

The complex hierarchical model of ion beam transport system is built as a two-stage process. In the first stage, each type of ion optical element is modeled by a dedicated actor. In the second stage, these basic models are integrated hierarchically bottom-up and interconnected by links representing the actual beam line configuration. The completed model forms a hierarchical aggregation of actors where tokens, representing $\boldsymbol{\sigma}$ matrices, travel from actor to actor experiencing transformations according to the specific transfer matrix. Model execution can be viewed as a dataflow of a $\boldsymbol{\sigma}$ matrix token and a coordinate vector token through an array of transforming actors representing ion optical elements.

The hierarchy of the model is used as a syntactic rather than as a semantic tool, so that actors are aggregated into conceptual abstractions such as ion optical elements and parts of beam line. This means that the model is built using transparent composite actors, because the inner actors need not have their own directors inside that would provide them with different semantics. The exception to this is the *IterateOverArray* actor, which requires a director inside. If a composite actor is transparent, a port parameter will never read a token provided unless the actor is made opaque by adding the director in the composite. For this reason, actors in the model containing the *IterateOverArray* actor are also opaque. The director of these opaque composite actors is the SDF director.

3.2. Building elementary models

The structure and functioning of the elementary model of an ion optical element is described on the magnetic quadrupole lens model, shown in Fig. 2. The model is an opaque composite actor with three levels of hierarchy. The upper level represents the element model container. The middle level is used for parameter definition and for 'slicing' the modeled element along the z-axis. The bottom level performs the actual matrix calculation.

[1] Deadlock is a condition where two (or more) processes are waiting for the other to do something, so neither can proceed. Bounds checking prevents accessing of array elements that are beyond their array bounds.

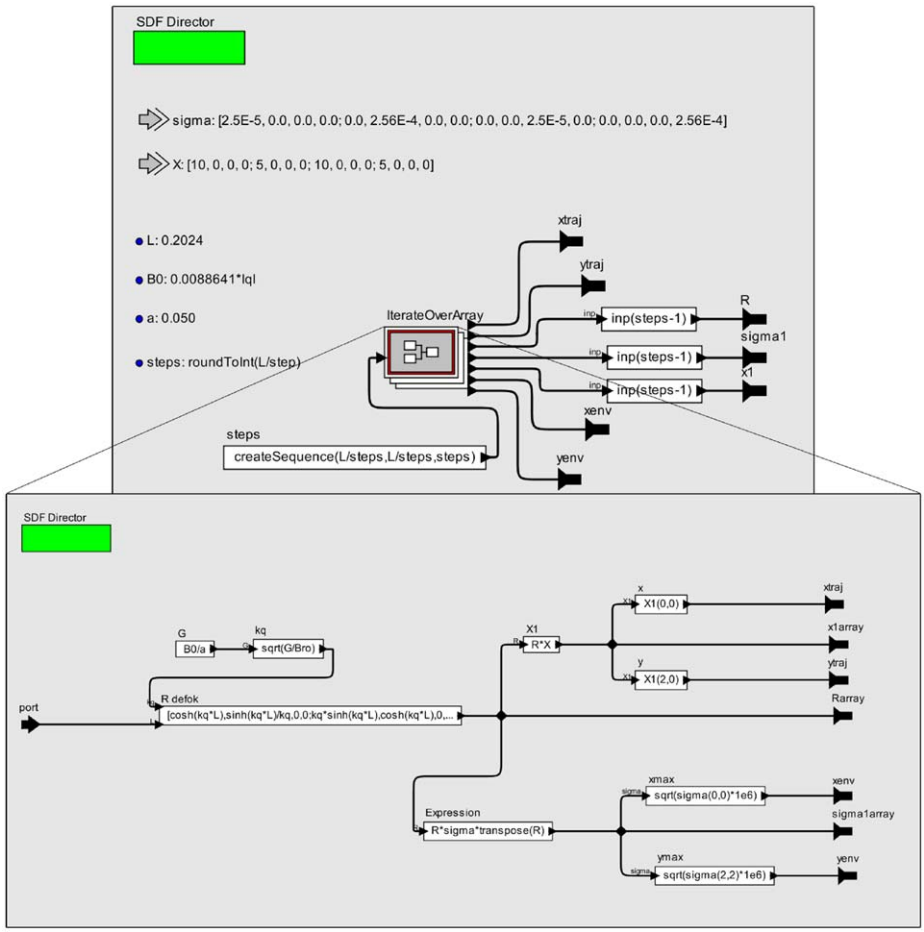

Fig. 2. The middle and bottom layers of the quadrupole lens model.

In the highest level of hierarchy, the model has two input ports, **sigma** and **X** port.[2] On its **sigma** port, the model receives the beam matrix token upon entrance into the element model. On its **X** port, it receives the position vector token of the selected particle upon entrance into the element model. On its output ports, **sigma1**, **x1**, **xenv**, **yenv**, **xtraj**, **ytraj**, and **R** port, the model produces tokens for transformed beam matrix, transformed position vector, horizontal and vertical beam envelopes, horizontal and vertical particle trajectory positions, and transfer matrix of the modeled optical element, respectively.

In the middle level of hierarchy, the parameters relevant to the particular model are defined. The **L** parameter defines the length of the lens. The parameter **steps** defines the number of steps into which the element will be divided to track the beam and particle propagation. It is calculated from the global parameter **step** defining the size of the step, and the length of the element. Magnetic field at the pole tip is defined as parameter B_0, which is calculated from the value of the current through the quadrupole lens coils. The current through the coils is set as topmost parameter $\mathbf{I}_{ql}$, and it is used as the control parameter of the lens. The radius of the aperture is defined as parameter **a**.

The lowest level of hierarchy, the inside of the *IterateOverArray* actor, contains the code for the calculation of beam and particle propagation. It implements the four-dimensional transfer matrix for magnetic quadrupole lens, which is given by the formula

$$\mathbf{R_Q} = \begin{pmatrix} \cosh k_q L & \frac{1}{k_q}\sinh k_q L & 0 & 0 \\ k_q \sinh k_q L & \cosh k_q L & 0 & 0 \\ 0 & 0 & \cos k_q L & \frac{1}{k_q}\sin k_q L \\ 0 & 0 & -k_q \sin k_q L & \cos k_q L \end{pmatrix} \tag{5}$$

where L is the length of an ion optical element characterized by the transfer matrix $\mathbf{R_Q}$. The transfer matrix is implemented with the expression actor *R defok*. The value of k_q is calculated by the expression actor *kq* from the parameterized values of magnetic field at pole tip B_0, the radius of the aperture a, and the magnetic rigidity of the central trajectory $(B\rho)$, using

$$k_q^2 = \frac{B_0}{a(B\rho)} \tag{6}$$

The magnetic rigidity of the central trajectory is calculated from the beam input parameters, using the relativistic expression

$$(B\rho) = \frac{T}{Zec}\sqrt{1+\frac{2mc^2}{T}} \tag{7}$$

where T is the kinetic energy of the particle, Ze the particle charge, c the speed of light, and m the particle rest mass. The value of $(B\rho)$ is calculated and set as the model topmost parameter **Bro**, common for the entire model.

In order to track the beam propagation inside an ion optical element, the element is parametrically 'sliced' along the z-axis

[2] In the paper, model parameter and port names are bolded, while actor names and expressions are italicized. The difference between port names and matrices should be clear from the context.

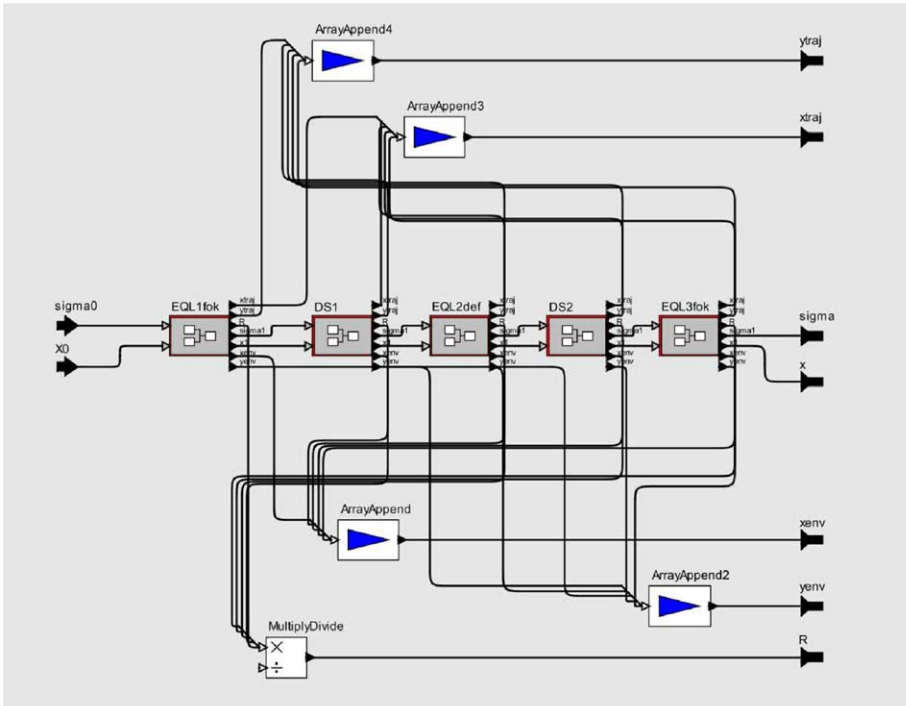

Fig. 3. Electrostatic quadrupole triplet model is composed of three electrostatic quadrupole lenses models EQL1, EQL2 and EQL3, and two models of drift spaces, DS1 and DS2.

into an arbitrary number of equal 'slices'. The beam propagation for the first slice is calculated starting from the beginning of the ion optical element, for the length of one slice. The beam propagation is then calculated starting also from the beginning of the ion optical element, but this time for the length of two slices. The procedure is repeated until the entire length of the optical element is covered. This is done so in order to avoid cumulative errors that would generate the calculation performed on successive elements of equal width.

The function *createSequence* of the expression actor *steps*, generates a sequence of the z-axis values, from 0 to the size of the element. The *IterateOverArray* high order actor executes the exact number of times needed to process the entire sequence of the z-axis values, which is the defaulted action on input arrays when the SDF director iteration counter is set to the value of 0. On each execution of the *IterateOverArray* actor, the thickness of the modeled element slice grows on each step of the iteration by the step size, until it reaches the length **L**. For each slice, the corresponding transfer matrix is calculated. The iterative values of transfer matrices are used for calculation of beam matrix ($R \times sigma \times transpose(R)$ expression actor) and coordinate vector ($R \times X$ expression actor) at the exit of each slice. From the diagonal elements of $\boldsymbol{\sigma}$ matrices, values of beam size are then calculated by $x_{max} = (\sigma_{11})^{1/2}$ and $y_{max} = (\sigma_{33})^{1/2}$ and sent to corresponding output ports as arrays of tokens.[3] In similar fashion, the particle coordinates are extracted from X matrices. Thus, one execution of the *IterateOverArray* actor calculates beam sizes and trajectory positions for one slice along the z-axis, while the complete iteration calculates these parameters for the entire length of the ion optical element. The approach is analogous for other beam line elements.

[3] In the Vergil, matrices and arrays are indexed from 0.

It should be noted that each input port of the *IterateOverArray* actor expects an array, so $\boldsymbol{\sigma}$ and **X** matrices cannot be directly connected to its input ports. Thus, they are connected to the so-called *port parameters* in the actor enclosing the *IterateOverArray* actor. Port parameter is a parameter with a port associated with it, and it can be used to update the current value of the parameter. After adding port parameters, the enclosing actor is made opaque by adding a director. The *IterateOverArray* inside model is then in the scope of these port parameters.

A simple derivative of the magnetic quadrupole model is the electrostatic quadrupole model. The bottom level of the electrostatic quadrupole model is the same as the model for magnetic quadrupole, with the difference that equivalent magnetic field at a pole-tip is given by

$$B_0 = \frac{2V}{av} \tag{8}$$

where V is the potential of electrostatic quadrupole electrode set as topmost parameter **V**, and used as the control parameter of the lens. The speed of the reference particle in the beam, v, is given by

$$v = \sqrt{\frac{2T}{m}} \tag{9}$$

Both values are calculated on the bottom level of hierarchy, using the beam parameters set on the topmost level.

Using electrostatic quadrupole and drift space models, a quadrupole triplet model can be integrated in a straight forward fashion. The electrostatic quadrupole triplets QT1 and QT2, each consist of three electrostatic quadrupole lenses and two drift spaces in between. The quadrupole triplet composite actor *QT*, shown in Fig. 3, thus consists of three electrostatic quadrupole models, and two drift spaces models placed in between. Output from one component actor is fed into the input port of the next actor in line. Electrostatic lenses EQL1, EQL2 and EQL3 are

focusing, defocusing, and focusing in horizontal plane, respectively. Four *ArrayAppend* actors append the data generated by component actors into single arrays, while *MultiplyDivide* actor calculates the transfer matrix of the entire electrostatic quadrupole triplet.

The composite actor for graphically depicting beam ellipses is implemented as the opaque composite actor *BeamEllipses*. The data for displaying the beam phase ellipses in xx' and yy' planes, and the beam profile in xy plane, are calculated from the beam $\boldsymbol{\sigma}$ matrix, with all the necessary scaling. The ellipse actor can be placed on any desired place inside the model, provided it is fed by a $\boldsymbol{\sigma}$ matrix token on its input port. The hierarchical compositionality of the model enables user to place diagnostics composite actor *BeamEllipses* in just any place inside the model where the $\boldsymbol{\sigma}$ matrix token is available.

3.3. Model integration

The model is integrated bottom-up graphically by inserting developed library models, linking them together and setting values of their respective parameters. The model of the M1 beam line (Fig. 4) is built from the composite actor modeling the ion beam (actor *ECR ion source*), and a consecutive array of models, each modeling the corresponding part of the beam line: a solenoid lens (SL), quadrupole lens (QL) and analyzing magnet (AM), with

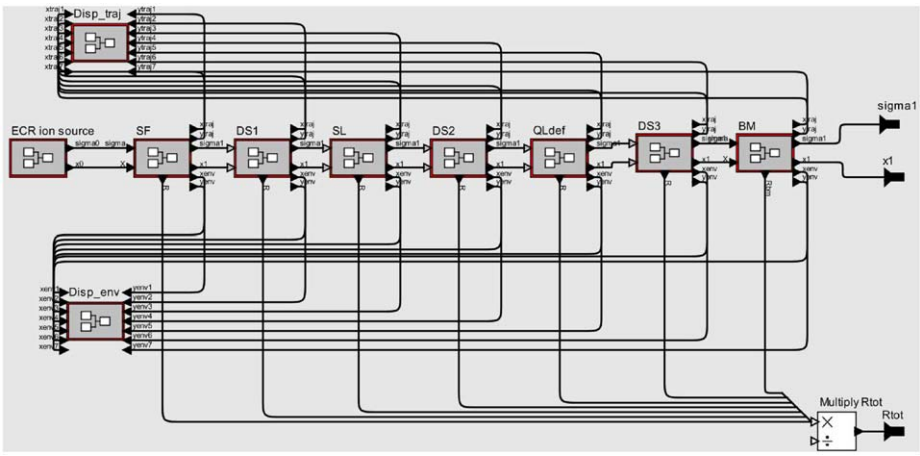

Fig. 4. M1 beam line model. The beam matrix token, exiting *ECR Ion Source* actor, cascades through the array of actors modeling individual beam line elements. The analyzing magnet AM1 is modeled using the bending magnet model (BM).

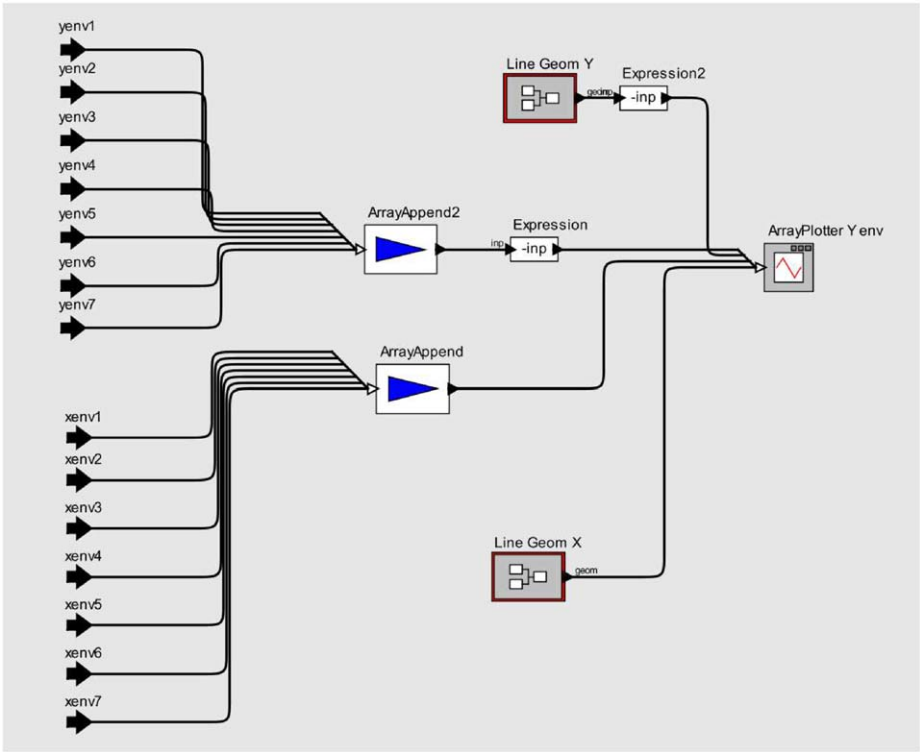

Fig. 5. Composite actor *Disp_env* displays beam envelopes in x and y planes, by appending strings of values from individual beam line models and displaying them across beam line geometry generated by *Line Geometry* composite actors.

Table 1
Physical dimensions of M1 beam line ion optical elements.

Optical element	Model actor name	Length L (m)	Aperture a (m)/ab (m × m)	Bending radius R (m)	Bending angle ϕ (deg)	Oblique entry β1 (deg)	Oblique exit β2 (deg)
Stray field SF	SL1	0.035	0.09				
	SL2	0.035	0.09				
Drift space 1	DS1	0.2186	0.035				
Solenoid lens	SL	0.1648	0.45				
Drift space 2	DS2	1.0648	0.048				
Quadrupole lens	QL	0.2024	0.050				
Drift space 3	DS3	0.2062	0.048				
Analyzing magnet	BM		0.1 × 0.05	0.4	90	0	26.6

Table 2
Physical dimensions of C2 beam-line ion optical elements.

Optical element	Model actor name	Length L (m)	Aperture a (m)/ab (m × m)	Bending radius R (m)	Bending angle ϕ (deg)	Oblique entry β1 (deg)	Oblique exit β2 (deg)
Drift space 1	DS1	0.52	0.110				
Quadrupole triplet	EQL1	0.075	0.035				
QT1	DS1	0.029	0.110				
	EQL2	0.150	0.035				
	DS2	0.029	0.110				
	EQL3	0.075	0.035				
Drift space 2	DS2	2.455	0.070				
Analyzing magnet	BM		0.1 × 0.05	0.6	90	26.6	26.6
Drift space 3	DS3	2.370	0.070				
Quadrupole triplet	EQL1	0.135	0.035				
QT2	DS1	0.025	0.110				
	EQL2	0.235	0.035				
	DS2	0.025	0.110				
	EQL3	0.135	0.035				
Drift space 4	DS4	1.275	0.125				

intervening drift spaces DS1, DS2 and DS3, and an ECR stray magnetic field model located at the beginning of the beam line (SF). The ion beam model generates beam matrix and coordinate vector tokens. The stray field is modeled by the composite actor containing two consecutive solenoid lenses models.

The model M1 has two additional sub-models, *Disp_env* and *Disp_traj*, for displaying beam envelope and particle trajectories (Fig. 5). These composite actors append beam and particle-tracking data from individual optical element models and superimpose them on the x and y graphics of the beam line itself. The graphics is generated by the sub-models *Line Geom X* and *Line Geom Y*, using data shown in Tables 1 and 2. The total or cumulative transfer matrix for the M1 beam line is calculated by the actor *MultiplayRtot* as

$$\mathbf{R}_{tot} = \mathbf{R}_n \times \mathbf{R}_{n-1} \times \cdots \times \mathbf{R}_1 \tag{10}$$

and it is output to the $\mathbf{R}_{tot}$ port.

The beam line C2 model is built in the same fashion. The composite actor C2 has sub-models of two electrostatic quadrupole triplets QT1 and QT2, one bending magnet (BM) and four drift intervening spaces DS1, DS2, DS3 and DS4. Both models, of M1 and of C2 beam lines, are then aggregated so that output from the model M1 is fed into the input of the model C2, and represented by a single composite, multilayered actor *FAMA* on the top most level of the hierarchy (Fig. 6).

The model has six levels of hierarchy. The top level defines universal constants, beam parameters, ion parameters and extraction voltage, size of the slice step along the z-axis, and control parameters such as currents and voltages across optical elements. It also defines the magnetic rigidity parameter, whose value is calculated from beam parameters. Parameters of optical lenses, such as the length and aperture of lens and magnetic field at its pole tip, are defined inside the models of corresponding elements.

An ion optical element stray field is modeled by substituting its physical length with its effective length. The dependencies of these effective lengths of current through their coils are neglected, being sufficiently small.[4] The effective lengths for the median values of current ranges are used in the model. The drift spaces lengths in front and behind solenoid and quadrupole lenses are adjusted to take into account the difference between the physical and effective length of the lenses.

The model is executable. Every execution of the model displays beam envelopes and the projections of the trajectory of the selected particle in horizontal and vertical planes, for the M1 and the C2 beam lines, separately. It also outputs calculated values of the total transfer matrix for the entire model, magnetic rigidity of the central trajectory, and set currents for bending magnets, calculated from the magnetic rigidity. The model displays beam ellipse in xy plane, and beam phase ellipses in the horizontal and vertical planes at the exit of FAMA.

4. Simulation results

The physical dimensions of ion optical elements are summarized in Table 1 and 2. All the apertures within FAMA are circular, except in the analyzing magnets, where they are rectangular.

[4] The effective length of the solenoid lens varies 1.2 mm for the current range of 100–500 A.

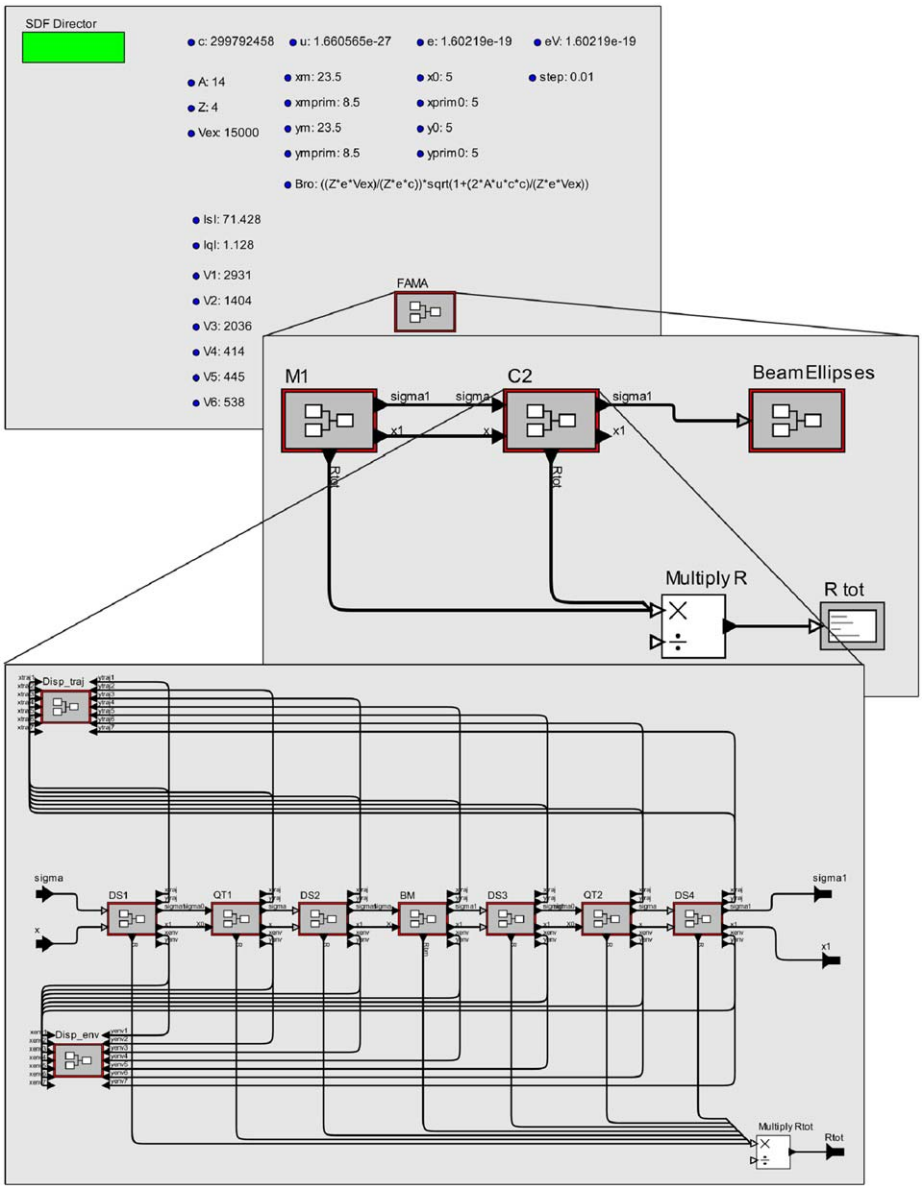

Fig. 6. Integration of the FAMA model. Beam matrix and coordinate vector tokens output from M1 are fed into C2 beam line model. Universal constants, extraction, beam and control parameters, and the 'slicing' step of the model, act as global variables for the entire model. The analyzing magnet AM2 is modeled using the bending magnet model (BM).

The ion beam used in simulation is 60 keV N^{4+}. The starting emittances of the beam are assumed to be $\varepsilon_{xx'} = \varepsilon_{yy'} = 200$ [π mm × mrad]. The starting beam is considered to have a double waist with maximal half width $x_m = y_m = 23.5$ mm, and maximal half divergence $x'_m = y'_m = 8.5$ mrad. The particle with arbitrary coordinates $x_0 = y_0 = 5$ mm, and $x'_0 = y'_0 = 5$ mrad within starting beam phase ellipsoid is selected.

The dependency of the solenoid lens magnetic field of current through its coils is calculated from the magnetic field distribution and excitation curves given in Ref. [9]. The dependency is given by the formula

$$B_0(T) = 0.0014 I_{sl}(\mathrm{A}) \tag{11}$$

Similarly, for the quadrupole lens the relationship is given by

$$B_0(T) = 0.0088641 I_{ql}(\mathrm{A}) \tag{12}$$

The model is at first run using the experimentally determined control parameters, shown in Table 3. The control parameters are currents through magnetic optical elements and voltages of electrostatic optical elements, V_1–V_6. The M1 and C2 beam envelope output from the model for experimentally determined

Table 3
Experimental, calculated, and tuned control parameters.

Optical element control parameter	Experimental values	Calculated values	Tuned values
I_{SL} (A)	221	Not calculated	71.428
I_{QL} (A)	2.35	Not calculated	1.128
V_1 (V)	1905	2831	2931
V_2 (V)	1300	1404	1404
V_3 (V)	1905	1986	2036
V_4 (V)	460	414	414
V_5 (V)	440	445	445
V_6 (V)	460	492	538

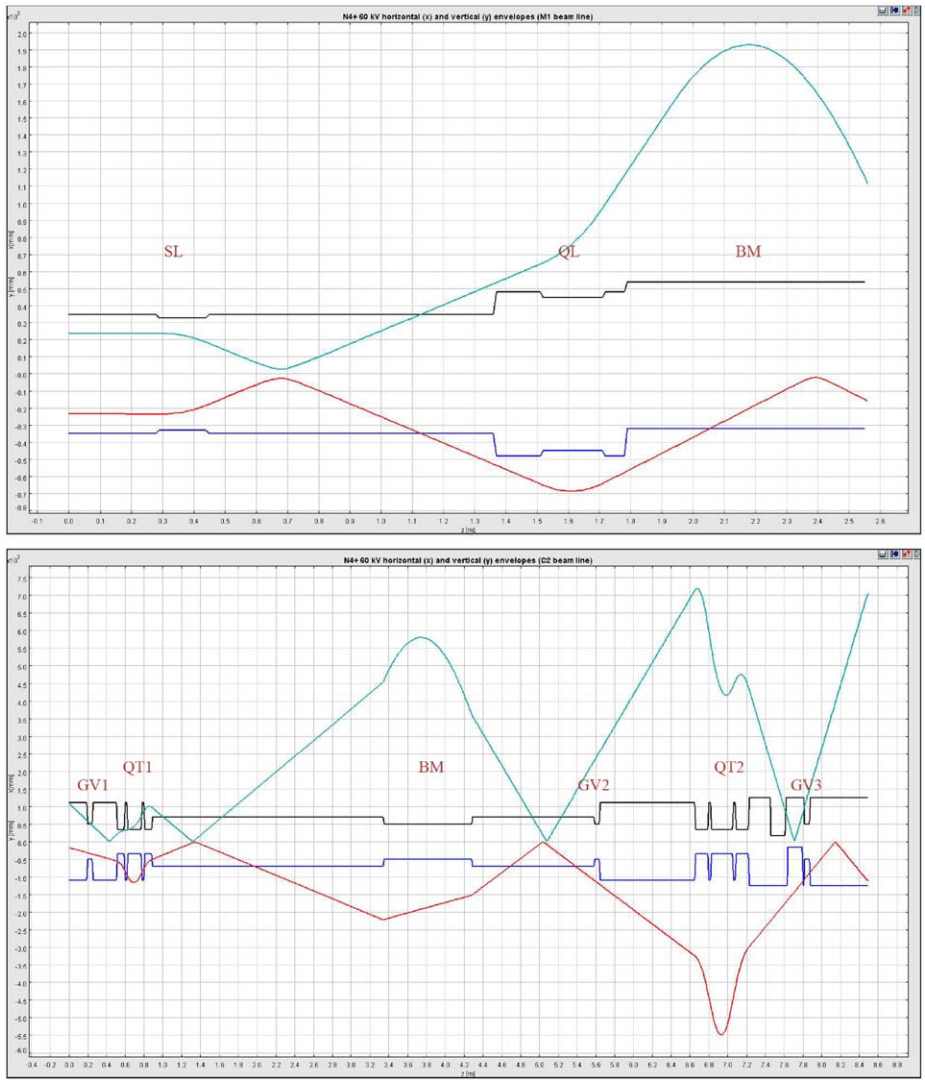

Fig. 7. M1 and C2 horizontal and vertical beam envelopes for experimentally determined control parameters for N^{4+} 60 kV beam.

control parameters, shown in Fig. 7, depict the fact of the low coefficient of ion beam transmission.

The model is then used to tune the control parameters. As the first step, all the control parameters are set to the values that are previously experimentally determined in order to increase the beam transmission as much as possible. The exception to this are the values of biasing potentials of the quadrupoles QT1 and QT2, which are set to the values suggested in Ref. [2]. These numerically optimized values significantly increase the beam transmission, although beam losses do remain.

From this point on, the tuning procedure performed on the model simulates the real control procedure. The control parameters are set and the model is executed to assess the effect of new parameters settings on the beam envelopes. The criteria used for the tuning are that the beam envelope touches the edges of the transport line on as few places as possible. The procedure was reiterated until satisfactory results were achieved, roughly 10 times. The tuned control parameter values obtained by the simulation on the model are listed in Table 3. The M1 and C2 beam envelopes for tuned control parameters are shown in Fig. 8. The horizontal and vertical trajectory projections of the particle with arbitrary coordinates, for tuned M1 and C2 beam lines, are shown in Fig. 9. The beam profile ellipse, and the horizontal and vertical phase ellipses at the exit of C2, are shown in Fig. 10.

The values calculated numerically in Ref. [2] are also given in Table 3, for comparison reasons. The numerical calculation did not take into account control parameters of M1 beam line, but rather assumed the beam characteristics upon entry into the C2 beam line. The emittances assumed in the calculation were two and a half times smaller than the emittances used in the simulation, hence the difference between the experimentally determined and the simulated values of solenoid and quadrupole lens currents.

The magnetic rigidity calculated by the model is $(B\rho) = 0.0329Tm$. Analyzing and bending magnets set currents calculated from the magnetic rigidity are $I_{am} = 118.34$ A, and $I_{bm} = 39.31$ A. The cumulative transfer matrix for the entire transport line is

$$R_{tot} = \begin{pmatrix} -0.0209 & 5.6380 & -0.0059 & 1.6128 \\ -0.1900 & 7.0110 & -0.0543 & 2.0056 \\ 0.0857 & 0.4821 & -0.2996 & 1.6854 \\ 0.0527 & 1.1789 & -0.1843 & 4.1211 \end{pmatrix} \tag{13}$$

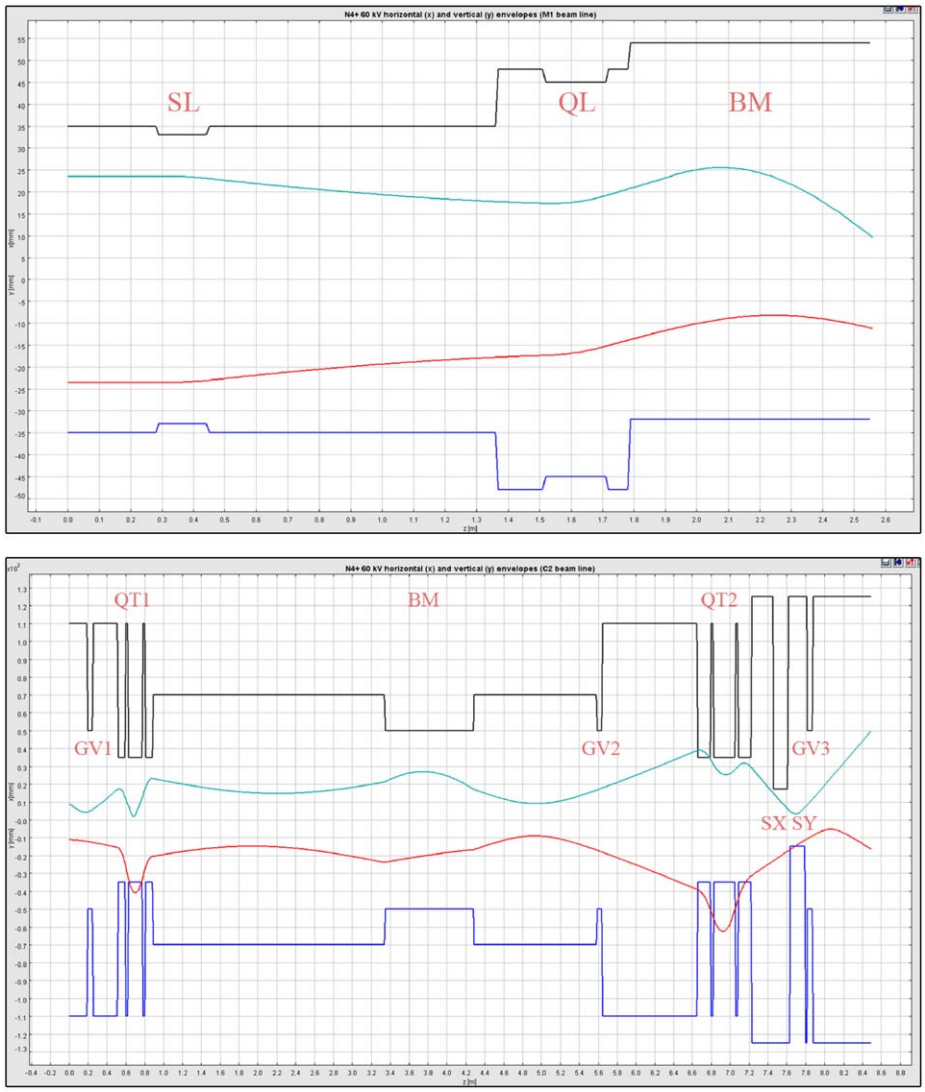

Fig. 8. M1 and C2 horizontal and vertical beam envelopes for tuned control parameters for N^{4+} 60 kV beam.

5. Conclusion and discussion

The model of the FAMA facility ion beam transport has been developed using the Ptolemy II modeling framework, for the purpose of optimization of control parameters for different beams and working regimes. The model is built as a hierarchical aggregation of actors that model individual ion optical elements, forming a library of ion optical element models. The tokens in the model carry beam matrix data or particle coordinate vector. The composite actors that model individual ion optical elements transform beam matrices according to their transfer matrices. The data flow of tokens through the model emulates transport of ion beams through the modeled system.

The resulting model enables an easy and efficient simulation of ion beam transport and fast optimization of its control parameters. The approach is modular and flexible, enabling fast modification of existing models and integration of bigger models, using already built aggregate models and the existing and extensible library of ion optical models.

The developed model is tested in tuning the control parameters of optical elements of the FAMA facility. The simulation produced improvements of transmission coefficients with a reasonably small simulation effort and model development time.

It is important to stress that the values of control parameters calculated by a model typically do not match exactly real beam emittance with beam line acceptance ellipses, because of uncertainties related to initial beam parameters, beam emittances, approximations in magnet modeling, etc. This is also true of this model. Hence, the operator still has to do some adjustments of control parameters on-line, a process that cannot be entirely rationalized, as explained in Ref. [10]. However, the model developed in this approach can reduce the time needed for the optimization of control parameters, and can be a useful tool in operator training.

The model can be further adapted from the beam envelope calculating to the multi-particle ray-tracing program. As it is now, each execution of the model plots a single ray trace of a particle with arbitrary coordinates within the beam initial phase space. By making the model execute iteratively an arbitrary number of times starting each time from a different, statistically distributed position within the beam initial phase space, each execution

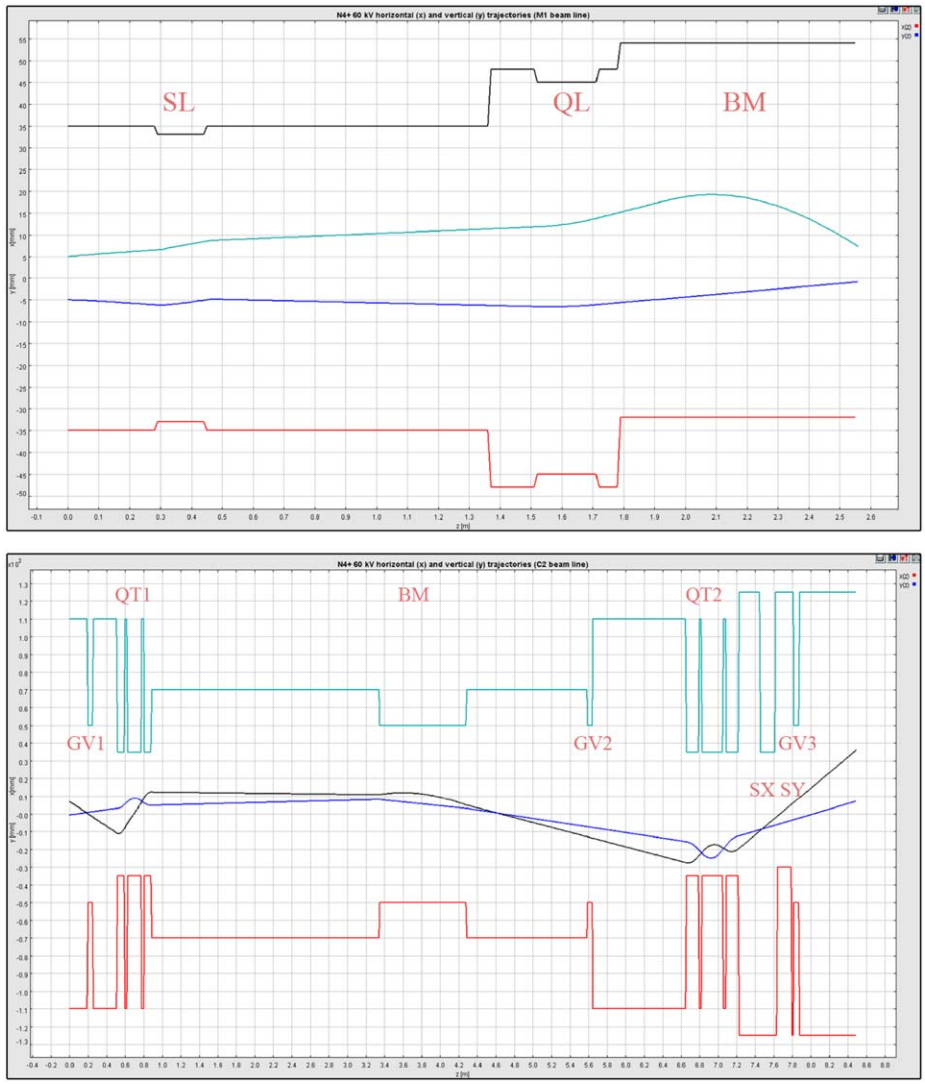

Fig. 9. M1 and C2 horizontal and vertical trajectories of a particle with arbitrary coordinates within starting beam phase ellipsoid.

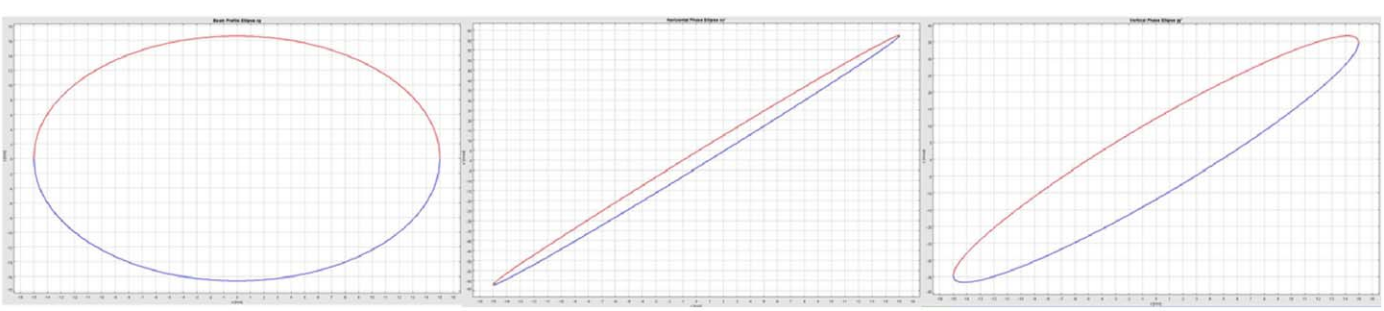

Fig. 10. Beam profile in the *xy* plane, and the horizontal and vertical phase ellipses at the exit of C2.

would plot a separate trace of the particle within the beam. This would allow the inclusion of the models of Faraday cup and beam profile monitor into the model.

Due to the heterogeneity of the model, it is possible to replace the matrix-based calculation of the beam transport through individual optics elements (in SDF domain) with differential equation solver-based calculation (in CT domain), without disturbing the upper levels of the model. This way the model would become more precise.

The hierarchical structure of the model can grow both horizontally and vertically, allowing for the expansion of the object model and the control system model. By gradually adding new control features to the model, we expect to move closer to the implementation of the control system.

Acknowledgments

The present work has been supported by the Ministry of Science and Technological Development of the Republic of Serbia, through the projects Physics and Chemistry with Ion Beams, and MNTRS 141025.

References

[1] A. Dobrosavljević, N. Nešković, P. Beličev, J.J. Čomor, V. Vujović, R. Balvanović, J. Ristić-Đurović, Nuclear Instruments and Methods A 597 (2008) 136.
[2] P. Beličev, M. Šiljegović, A. Dobrosavljević, N. Nešković, Review of Scientific Instruments 75 (2004) 1678.
[3] A. Goderis, C. Brooks, I. Altintas, E.A. Lee, C. Goble, Heterogeneous composition of models of computation, U.C. Berkeley, Technical Report No. UCB/EECS-2007-139, 2007.
[4] J. Ludvig, J. Mccarthy, S. Neuendorffer, S.R. Sachs, Design Automation for Embedded Systems 7 (2002) 341.
[5] J. Eker, W. Janneck, E.A. Lee, J. Liu, X. Liu, S. Neuendorffer, S. Sachs, Y. Xiong, Taming heterogeneity—the Ptolemy approach, in: IEEE Proceedings, Special Issue on Modelling and Design of Embedded Software, 2002.
[6] J. Eker, C. Fong, J.W. Janneck, J. Liu, Design and simulation of heterogeneous control systems using Ptolemy II, in: Proceedings of the IFAC Conference on New Technologies for Computer Control, 2001.
[7] E.A. Lee, Computing for embedded systems, in: IEEE Instrumentation and Measurement Technology Conference, Budapest, 2001.
[8] J. Liu, S. Jefferson, E.A. Lee, Motivating hierarchical run-time models in measurement and control systems, in: Proceedings of the American Control Conference, Arlington, VA, 2001.
[9] Technical report on testing the focusing and bending elements of the mVINIS Ion Source, for the TESLA Accelerator Installation, Joint Institute for Nuclear Research, Dubna, 1997.
[10] E. Schuster, C. Xu, N. Torres, E. Morinaga, C. Allen, M. Krstic, Nuclear Instruments and Methods A 581 (2007) 799.