Nuclear Instruments and Methods in Physics Research A 607 (2009) 334–339

Contents lists available at ScienceDirect

Nuclear Instruments and Methods in Physics Research A

journal homepage: www.elsevier.com/locate/nima

Development of a movable synchrotron-radiation mask for the Photon Factory Advanced Ring (PF-AR)

Takeshi Takahashi [a,*], Tohru Honda [a], Yoichiro Hori [a], Masaaki Izawa [a], Takashi Nogami [a], Shogo Sakanaka [a], Yasunori Tanimoto [a], Takashi Uchiyama [a], Junko Watanabe [b]

[a] Accelerator Laboratory, High Energy Accelerator Research Organization (KEK), 1-1 Oho, Tsukuba, Ibaraki 305-0801, Japan
[b] Toshiba Corporation, Yokohama 235-8523, Japan

ARTICLE INFO

Article history:
Received 15 April 2009
Accepted 18 May 2009
Available online 28 May 2009

Keywords:
Movable mask
Synchrotron radiation
Parasitic mode loss
SiC
Absorber

ABSTRACT

In order to protect 3.4-m-long rf cavities from impinging intense synchrotron radiation (SR), we developed a unique SR mask for use in the Photon Factory Advanced Ring (PF-AR). To obtain a wide aperture that is required for beam injection, we designed the mask so that the head of the mask can be moved over a horizontal range of 30 mm. To avoid the harmful excitation of resonance modes in this mask structure, a microwave absorber was built into it. Two of the designed masks were installed in the PF-AR, and they showed satisfactory performance during routine single-bunch operations under beam currents of up to 60 mA. We report the design of this movable mask and its performance during operations.

© 2009 Elsevier B.V. All rights reserved.

1. Introduction

In many electron storage rings, synchrotron-radiation (SR) masks are used to protect components such as rf cavities against irradiation by intense SR from bending magnets or insertion devices. If the aperture limited by the mask is too narrow for beam injection, the mask is designed such that it is movable. Similar masks [1–4] are used at B-factories to cutoff halo electrons and positrons, and thus, to reduce the background particles in high-energy physics detectors.

The Photon Factory Advanced Ring (PF-AR) [5] is a 6.5 GeV synchrotron light source at the High Energy Accelerator Research Organization (KEK). The PF-AR is routinely operated with single-bunch electron beams that have maximum beam currents of up to 60 mA. The principal parameters of the PF-AR are shown in Table 1. Because of high single-bunch currents, it is very important to manage the high parasitic mode losses in rf cavities or other vacuum-chamber components.

An accelerating system [6] for the PF-AR comprises six multi-cell cavities, two 1-MW klystrons, and rf distribution networks. Four cavities are located in the east straight section and the other two are located in the west straight section. These cavities can provide a total rf voltage of 15 MV at a frequency of 508.57 MHz. Each cavity, which is 3.4 m long, has an alternating periodic structure (APS) [7] with eleven accelerating cells that are coupled with each other by coupling cells that are present between them. In 2003, we experienced a trouble in one of the cavities [8]; this was suspected to be due to a damage caused by an irradiation by SR. This trouble prompted us to install SR masks for the cavities. The mask for the cavity that is most upstream in each straight section should be movable, while those for the other cavities can be fixed.

Another important topic concerning the masks is the excitation of electromagnetic fields in the mask structure. Electromagnetic simulations indicate that the mask structure has some resonance modes. The high single-bunch current of the PF-AR can generate powerful parasitic mode losses [9,10] in the APS cavities, and some of these losses (microwaves) can propagate through beam ducts and excite the resonance modes in the mask. If the resonant excitation occurs, the rf contacts in the movable mask may be damaged or beam instabilities may be induced during beam injections. In order to avoid such problems, a microwave absorber was built into the mask structure.

In this paper, we describe the design of the movable mask, the results of the high-power testing of the mask on a test bench, and the performance of the mask during beam operations.

2. Design of the movable SR mask

2.1. Concept

The movable masks were designed for installation in the east and the west straight sections to protect each of the cavities that

* Corresponding author. Tel.: +81 29 864 5585; fax: +81 29 864 2801.
E-mail address: takeshi.takahashi@kek.jp (T. Takahashi).

0168-9002/$ - see front matter © 2009 Elsevier B.V. All rights reserved.
doi:10.1016/j.nima.2009.05.132

Table 1
Principal parameters of the PF-AR.

Beam energy	6.5 GeV
Circumference	377 m
Bending radius	23.2 m
Natural emittance	293 nm rad
RF frequency	508.57 MHz
Energy loss per turn	6.66 MeV
Total rf voltage	15 MV
Injection energy	3 GeV
Maximum beam current	60 mA
Natural bunch length	17 mm

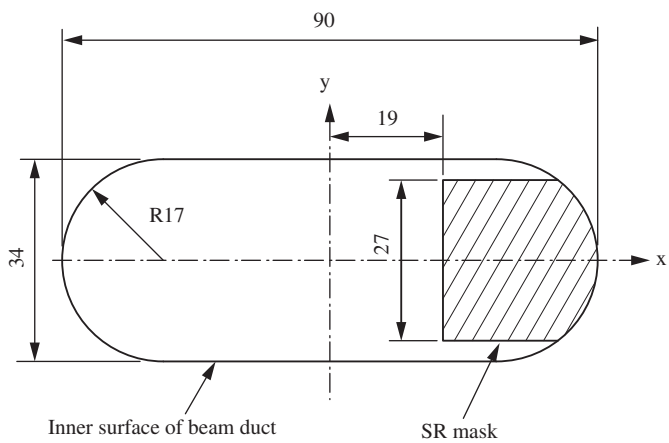

Fig. 1. Simplified model of an SR mask in a racetrack beam duct. The shape of the SR mask was assumed to be that of a metallic cylinder (Regular racetrack ducts for the PF-AR have a width of 90 mm, while those in the straight sections for the cavities are 10-mm wider).

were most upstream. Each vacuum port for the movable mask is located in the middle of a tapered transition region from the circular duct (100 mm diameter) of the rf cavity to a racetrack duct (100 mm wide, 34 mm high). The front edge of the cavity is located approximately 2.4 m downstream from the end of the bending magnet. In order to protect this cavity from SR irradiation, the tip of the mask should be inserted at a distance of 19 mm from the beam orbit. The horizontal aperture (measured from the orbit) required for beam injection was estimated to be approximately 25 mm at this location. To widen the aperture during injections, we designed the SR mask such that it is movable.

A fixed SR mask had been installed at 120 mm upstream from the port for the movable mask. A total SR power of 760 W has to be absorbed by these two masks at maximum beam current 60 mA and beam energy 6.5 GeV. The movable mask should absorb 59% (450 W) of this power. The body of the mask was cylindrical in shape (diameter: 26.9 mm), and the tip of the cylinder was diagonally cut in order to reduce the power density of the SR. Even with this configuration, the maximum power density on the tip of the mask was approximately 30 W/mm^2 in a 31.1-mm-wide, 0.48-mm-high area, where the height (FWHM) of the area was roughly estimated including the angular divergence of the SR, the vertical beam size and the vertical divergence of the beam, assuming 1% coupling for the vertical emittance. To manage such a high power density, we used alumina dispersion-strengthened copper (GlidCop® AL-15; SCM Metal Products, Inc.), which is strong at high temperatures, as the material for the mask body.

Another concern is the high parasitic mode losses due to high single-bunch currents. We first considered a simplified mask model, shown in Fig. 1, and analyzed its resonances. Electromagnetic analysis performed using MAFIA code indicated

Table 2
Principal parameters of a trapped resonance mode of the simple SR mask shown in Fig. 2.

Resonant frequency	2.96 GHz
$R_{sh}/Q^{*)}$	7.0 Ω
Q	3800

*)Shunt impedance (R_{sh}) is defined by V^2/P where V and P are the rf voltage and the dissipated power, respectively.

that there was a trapped resonance mode around the mask, even when the root of the mask was shortened. The parameters of the trapped mode are shown in Table 2, and corresponding field distributions are shown in Fig. 2. The resonant frequency (2.96 GHz) of the trapped mode is higher than the cutoff frequency (1.81 GHz) of the lowest propagation (TE-like) mode in the racetrack duct; however, the trapped mode does not couple to the lowest propagation mode because their field distributions have different symmetries.

High single-bunch currents in the PF-AR generate large parasitic mode losses in each cavity. Some of the microwaves that are generated by these losses and have frequencies higher than the cutoff frequency of the beam port of the cavity can propagate through the ports and can excite the trapped mode of the mask. We actually encountered heating problems in some taper ducts and in pumping slits located next to the cavities. The trapped mode in the mask can also be excited directly by beams because of longitudinal shunt impedance. Such resonant excitation can damage the rf contacts in the movable masks or induce beam instabilities during injections at a low energy of 3 GeV. To avoid resonant excitation and the related problems, we decided to install a microwave absorber in the mask structure. For this purpose, we utilized a microwave absorber similar to that used for damped accelerating cavities [11,12] and for higher-order mode couplers [13].

2.2. Structure of the movable mask

A schematic of a designed SR mask is shown in Fig. 3. The movable mask comprises a mask body, a microwave absorber, and a mechanism for moving the mask body. The mask body is made of GlidCop®. We formed a cooling water channel (diameter: 14 mm; depth: approximately 400 mm) by using a precise deep-drilling technique. To harden the mask surface around the sliding contact area, we joined a stainless-steel pipe to the periphery of the mask body by the hot isostatic pressing (HIP) technique. We also joined another stainless-steel cylinder at the other end of the mask body during the same HIP process and welded both inlet and outlet cooling-water pipes to that end. One of the advantages of this structure is that there are no joined paths from the cooling channel to the vacuum side; therefore, we can avoid the potential problem of water leakage to the ultrahigh vacuum side.

The body of the mask was designed to move precisely within a horizontal range of 30 mm using a stepping motor. Contact fingers, made of beryllium-copper, were installed to ensure the rf contact between the mask body and the inner surface of the port. To damp the resonance modes in the mask structure, we installed a cylindrical microwave absorber in a coaxial part of the structure. The microwave absorber is made of silicon carbide (SiC) (CERASIC®-B; Covalent Materials Corp). The SiC cylinder had an inner diameter of 37 mm and a thickness of approximately 20 mm, and it was brazed to the inner wall of a water-cooled copper cylinder. The gap between the mask body and the inner surface of the port was chosen as approximately 5 mm to avoid the

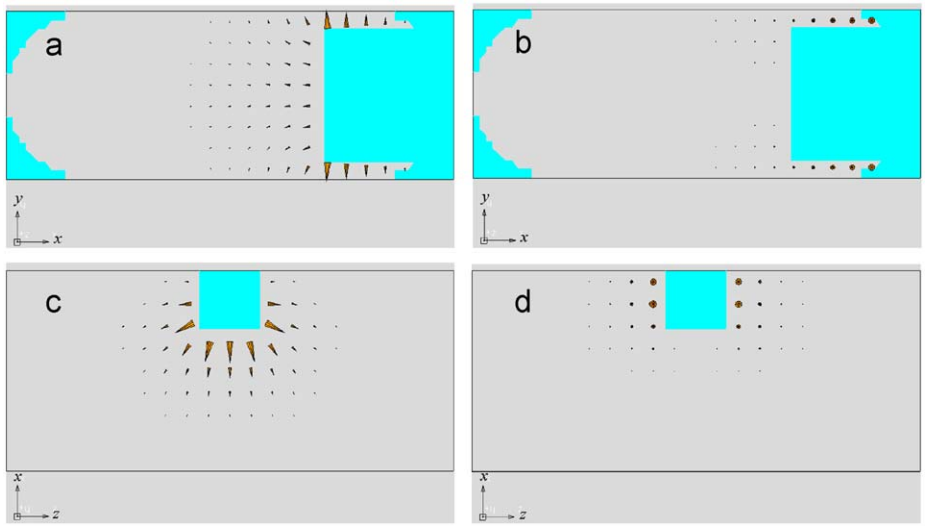

Fig. 2. Field distributions of a trapped resonance mode around the SR mask shown in Fig. 1. Resonant frequency: 2.96 GHz; (a) electric fields in the x–y plane, (b) magnetic fields in the x–y plane, (c) electric fields in the z–x plane, and (d) magnetic fields in the z–x plane.

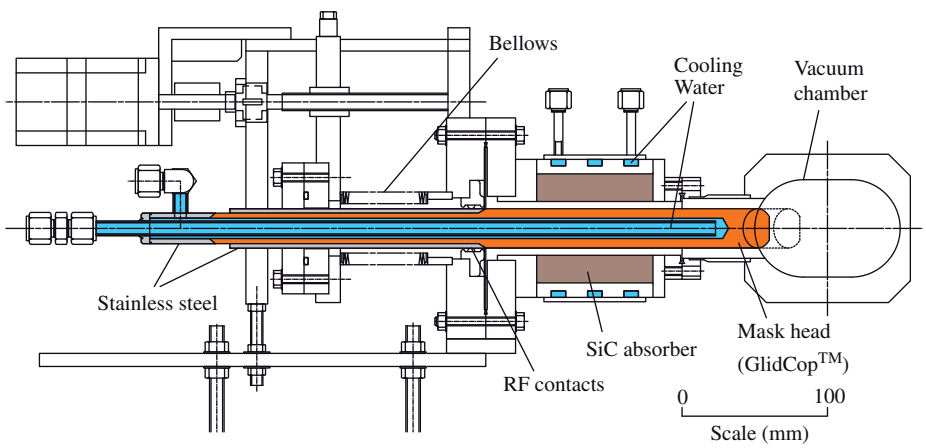

Fig. 3. Schematic of the movable SR mask.

occurrence of multipacting [14] by $\frac{1}{2}$ cycle due to damped trapped modes.

2.3. Estimation of dissipated microwave power in an absorber

The microwave absorber of the movable mask has to manage a high dissipated power during beam operations. In principle, we can predict the dissipated power using time-domain simulation codes. However, carrying out precise 3D modeling that includes the large APS cavity (3.4 m long, 465 mm in diameter) is not practical. Therefore, we estimated the dissipated power using a simplified model. First, we estimated the total microwave power that can propagate out of the cavity by using the loss parameters. Then, we assumed that the propagated microwaves had a smooth spectrum that was determined by the bunch length, and subsequently, we estimated the dissipated power in the microwave absorber using HFSS simulation code.

To calculate the loss parameters, we modeled the APS cavity using two-dimensional (r–z) simulation code, where the mesh size was chosen to be 1 mm, as shown in Fig. 4. By a time-domain simulation performed using the MAFIA T2 module, the loss parameter of the APS cavity was estimated to be 5.05 V/pC for an r.m.s. bunch length of 17 mm (57 ps). Next, we calculated all the resonance modes in the APS cavity that have resonant frequencies less than the cutoff frequency (2.30 GHz for the TM_{01} mode) of the beam ports. By using an eigenmode solver, we obtained 129 monopole modes below the cutoff frequency. Then, we estimated a loss parameter for the high-frequency (above cutoff) domain by [9,10]

$$k_{\text{high}} = k - \sum_{n=1}^{129} k_n \exp(-\sigma_t^2 \omega_n^2) \tag{1}$$

where k is the total loss parameter, $k_n(= (\omega_n/4)\ (R_{\text{sh}}/Q)_n)$ is the loss parameter for the n-th mode, ω_n is the angular resonant frequency for the n-th mode, and σ_t is the r.m.s. bunch length in time. Thus, we obtained $k_{\text{high}} = 0.705$ V/pC for $\sigma_t = 57$ ps. Subsequently, the parasitic mode loss ($P_{\text{pm, high}}$) for frequencies above the cutoff frequency was estimated by

$$P_{\text{pm,high}} = k_{\text{high}} I_{\text{b}}^2 / f_{\text{r}}, \tag{2}$$

where I_{b} is the beam current under single-bunch operation and f_{r} is the revolution frequency. At a beam current of 60 mA in the PF-AR, we estimated the loss power $P_{\text{pm,high}}$ as 3.2 kW. Since the beam ducts are connected to both sides of the cavity, the microwave power that can propagate through one of them was estimated to be 1.6 kW. It should be noted that the loss parameter

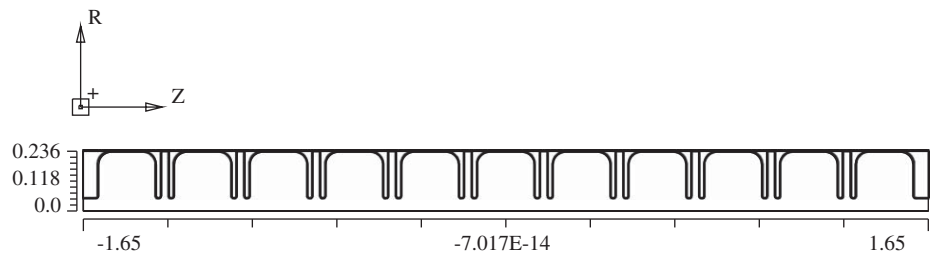

Fig. 4. A two-dimensional model of the APS cavity used for time-domain simulations. Unit: m.

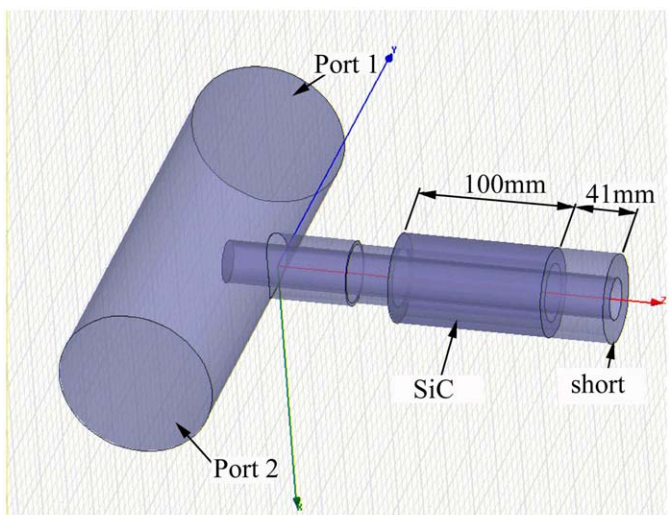

Fig. 5. Simple model of the SR mask for HFSS simulations. The tip of the mask is located at 33 mm inward from the inner surface of the duct.

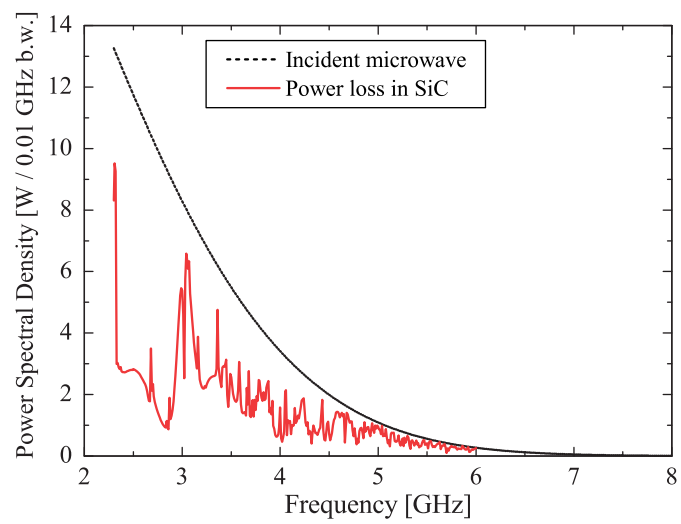

Fig. 6. Estimated spectral density (red line) for the power absorbed in a microwave absorber (SiC). The black line shows the assumed power spectral density of an incident microwave. For interpretation of the references to colour in this figure legend, the reader is referred to the web version of this article.

of the mask was estimated to be very small (approximately 0.01 V/pC for $\sigma_t = 57$ ps), which means that the parasitic losses due to the mask itself are much smaller than those from the cavity.

Although the power spectrum of the microwaves propagating in the beam ducts will generally have a complicated form, we assume that the power spectrum is roughly determined by the bunch length and is given by

$$P(\omega) \propto \exp(-\omega^2\sigma_t^2) \tag{3}$$

above the cutoff frequency and is zero below the cutoff frequency. Then, we estimated the dissipated power in the absorber using the simulation code HFSS, assuming a simplified model shown in Fig. 5. The beam duct was assumed to be a round pipe of diameter 100 mm. We assumed that the microwave in the TM_{01} propagation mode, whose power spectrum is given by Eq. (3), originated from Port 1, shown in Fig. 5, with a total power of 1.6 kW. Some of the microwaves are coupled to the mask structure, causing power consumption in the absorber, while the remaining microwaves pass through Port 2. In the simulation, we assumed that the dielectric constant ε_r and the loss tangent $\tan\delta$ of the SiC material are 25.9 and 1.13, respectively, which were taken from our data at a 2.45 GHz frequency. The simulation result is shown in Fig. 6, where the red line shows the estimated spectrum of the dissipated power in the absorber. The total power lost in the absorber is estimated to be 580 W by integrating the power spectral density in Fig. 6.

Considering that several simplified assumptions are made in the above-mentioned estimation, we designed an assembly of the microwave absorber so that it can manage a total power of up to 1 kW.

3. High-power testing for the movable masks

We manufactured two movable masks that were based on the above-mentioned design. A picture of a movable mask after it has been completely assembled is shown in Fig. 7. Before installation, we tested both masks in a high-power test stand, as shown in Figs. 8 and 9. Microwaves at a frequency of 1.296 GHz were generated using a 5 kW klystron in a coaxial line. The TEM mode in the coaxial line was then transformed into a TE_{10} mode in a rectangular waveguide. The movable mask was connected to the waveguide so that most of the incident microwaves were transferred to the mask. To evacuate the vacuum side of the mask assembly, a ceramic window was placed in the middle of the rectangular waveguide. Both incident and reflected powers were measured using a directional coupler that was placed after the circulator.

The movable mask was tested up to incident powers of 1.29 kW continuous wave (CW). The reflected power under this condition was approximately 215 W, and from these values, the dissipated power in the SiC absorber was estimated to be approximately 1.07 kW. We also estimated the dissipated power from the increase in the temperature of the cooling water for the absorber. By this estimation, we obtained a value of 0.945 kW, which almost agreed with the estimated power obtained using the directional coupler. The base vacuum pressure in the SR mask was 5.9×10^{-5} Pa, and it slightly increased up to 6.8×10^{-5} Pa at an incident power of 1.29 kW. During the high-power testing, we observed the interior of the mask through a viewport using a movie camera; no signs of discharges were observed. As a result of this test, we confirmed that both movable masks can manage microwave powers of up to 1 kW without any problems.

4. Installation and beam operations

Two movable masks were installed in the PF-AR during the summer shutdown in 2007. Fig. 10 shows a picture of the one installed in the east straight section. These masks were commissioned in October 2007. While positioning the head of the mask in a "stand-by" position (38 mm from the beam orbit), we conditioned the vacuum of the PF-AR up to an integrated stored current of 3.3 A h. Then, we inserted the mask head in a "mask" position (18 or 19 mm from the orbit) under a beam current of 1 mA at a beam energy of 3.0 GeV and accelerated the beam to 6.5 GeV. This conditioning procedure was repeated until the beam current reached 60 mA. Fig. 11 shows the beam current, the beam energy, and the pressure in the east straight section during the conditioning process. We observed only a slight pressure increase when we moved the mask, and the conditioning progressed very smoothly.

During beam operations, from the temperature increase and the flow rate of the cooling water, we measured both the absorbed SR power in the mask head and the dissipated power in the microwave absorber. The result of the measurement is shown in Fig. 12. We confirmed that the SR power entering the mask was approximately proportional to the beam current while the dissipated power in the microwave absorber was roughly proportional to the square of the beam current. The measured SR power absorbed in each movable mask was approximately 400 W at a beam current of 60 mA at 6.5 GeV. This is in agreement with the predicted SR power of 450 W (see Section 2.1). The typical dissipated power in the microwave absorber at both a beam current of 61.1 mA and a beam energy of 6.5 GeV was estimated to be approximately 710 W from the measured temperature rise of 3.4 °C and the flow rate of approximately 3 l/min. This almost agreed with that (580 W) predicted in Section 2.3. Even though several simplifying assumptions were made in predicting the dissipated power, the above-mentioned agreement was quite satisfactory.

We have been using the movable masks for more than a year, and we have not encountered any problem. During routine

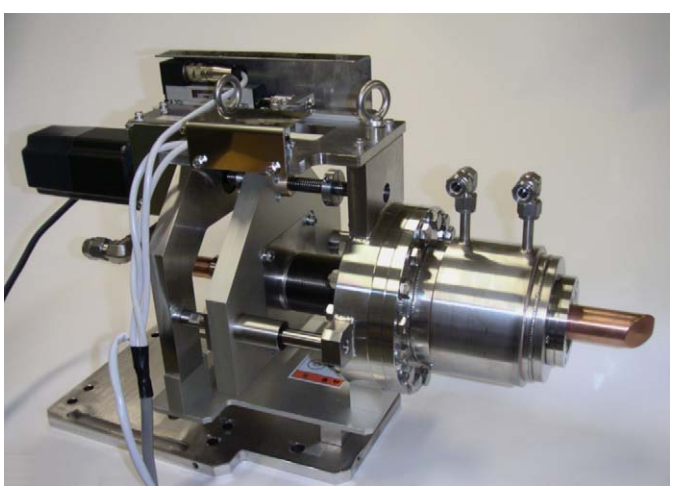

Fig. 7. Picture of the completed movable SR mask.

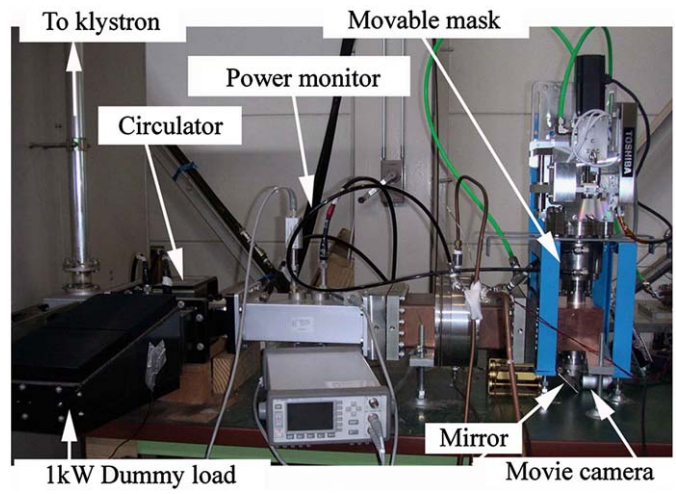

Fig. 9. Setup for high-power testing of the movable mask.

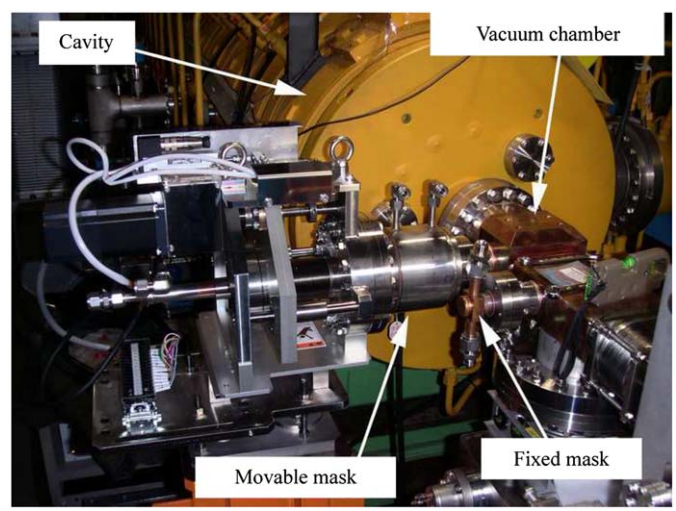

Fig. 10. Picture of the movable SR mask installed in the east straight section of the PF-AR.

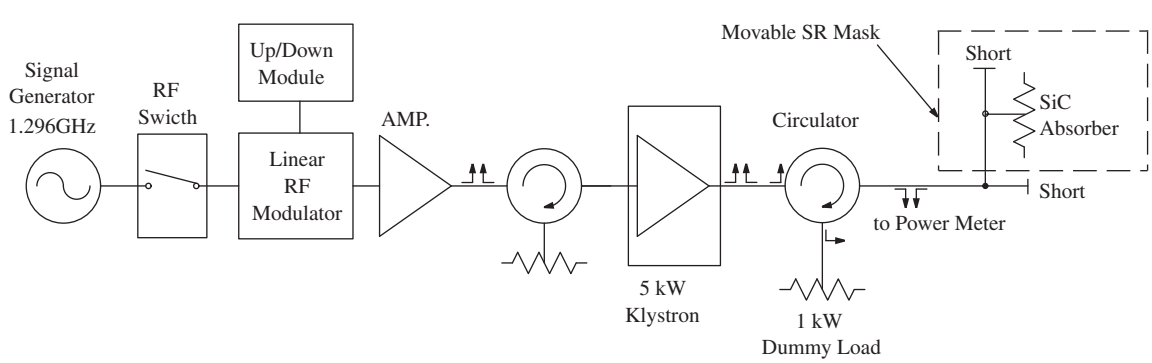

Fig. 8. Block diagram of a high-power test stand.

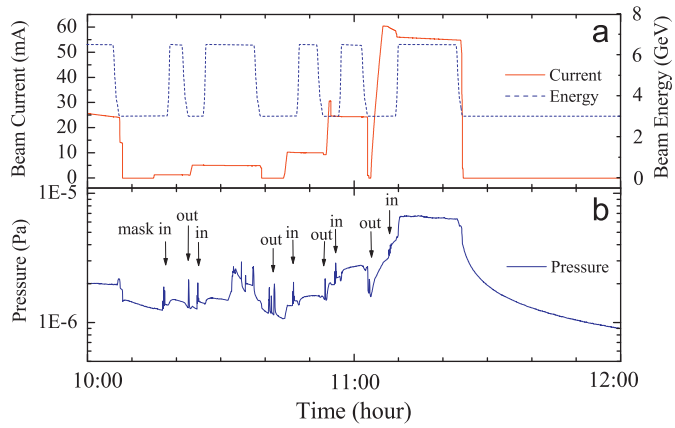

Fig. 11. Pressures in the east straight section during the conditioning process of the mask; (a) beam current and beam energy, (b) pressure near the mask in the east straight section.

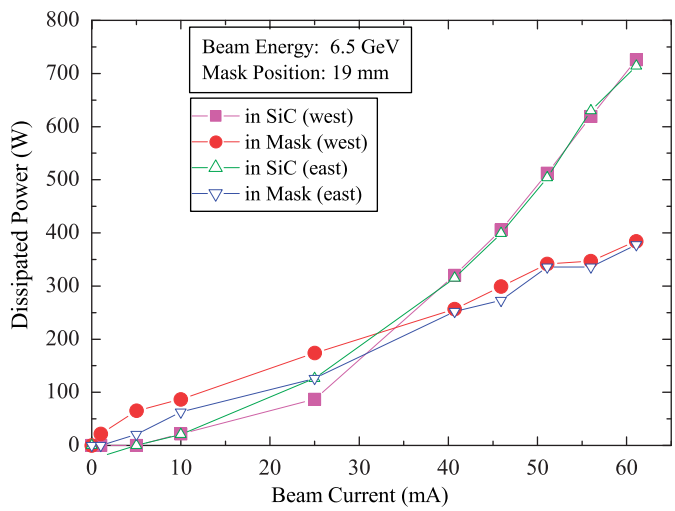

Fig. 12. Measured powers dissipated in the mask heads due to SR and the power dissipated in the microwave absorbers (SiC) due to parasitic losses in the east and the west straight sections. Abscissa: beam current under single-bunch operation; beam energy: 6.5 GeV; position of the mask head: 19 mm from the beam orbit.

operations, we move the mask head to the "stand-by" position and then inject beams. Subsequently, we insert the mask into an "intermediate" position (23 mm from the orbit), which enable us to accelerate beams without beam losses while masking some of the SR. After acceleration, we move the mask head to the "mask" position. These procedures have been automated.

5. Conclusions

In order to protect cavities from irradiation, we designed and manufactured movable SR masks for the PF-AR. These masks are equipped with microwave absorbers which can absorb high parasitic mode losses from the neighboring cavity or those in the masks themselves. The microwave absorber was designed to manage the maximum power consumption of 1 kW. Two movable masks were installed in the PF-AR, and during operations, they showed satisfactory performance without causing any problem. This device will be useful for high-intensity electron storage rings where the parasitic losses are very high.

Acknowledgments

The authors would like to thank Y. Takeuchi, T. Kageyama, and Y. Suetsugu for providing useful information on their movable beam masks for the KEK B-factory, and for useful discussions.

References

[1] J. Seeman, S. DeBarger, S. Metcalfe, M. Nordby, C. Ng, in: Proceedings of the 7th European Particle Accelerator Conference (EPAC 2000), Vienna, Austria, 2000, pp. 2298–2300.
[2] K. Kanazawa, K. Sato, N. Akasaka, T. Kageyama, Y. Suetsugu, Y. Takeuchi, in: Proceedings of the 7th European Particle Accelerator Conference (EPAC 2000), Vienna, Austria, 2000, pp. 2301–2303.
[3] Y. Suetsugu, T. Kageyama, K. Shibata, T. Sanami, Nucl. Instr. and Meth. A 513 (2003) 465.
[4] Y. Suetsugu, K. Shibata, A. Morishige, Y. Suzuki, M. Tsuchiya, Phys. Rev. ST Accel. Beams 9 (2006) 103501.
[5] Y. Kobayashi, et al., in: Proceedings of the 11th European Particle Accelerator Conference (EPAC'08), Genoa, Italy, 2008, pp. 2064–2066.
[6] S. Sakanaka, K. Ebihara, E. Ezura, S. Isagawa, T. Kasuga, H. Nakanishi, M. Ono, M. Suetake, T. Takahashi, K. Umemori, S. Yoshimoto, in: Proceedings of the 2003 Particle Accelerator Conference (PAC03), Portland, USA, 2003, pp. 1228–1230.
[7] T. Higo, Y. Yamazaki, T. Kageyama, M. Akemoto, H. Mizuno, K. Takata, IEEE Trans. Nucl. Sci. NS-32 (1985) 2834.
[8] S. Sakanaka, K. Ebihara, S. Isagawa, M. Izawa, T. Kageyama, T. Kasuga, H. Nakanishi, M. Ono, H. Sakai, T. Takahashi, K. Umemori, S. Yoshimoto, in: Proceedings of the 2005 Particle Accelerator Conference (PAC05), Knoxville, USA, 2005, pp. 1168–1170.
[9] P.B. Wilson, in: AIP Conference Proceedings No. 87, pp. 450–563.
[10] J.N. Weaver, PEP-NOTE-342, Stanford Linear Accelerator Center, 1981.
[11] M. Izawa, T. Koseki, Y. Kamiya, T. Toyomasu, Rev. Sci. Instrum. 66 (1995) 1910.
[12] F. Hinode, S. Sakanaka, in: Proceedings of the 1995 Particle Accelerator Conference (PAC95), Dallas, USA, 1995, pp. 1756–1758.
[13] J. Watanabe, K. Nakayama, K. Sato, H. Suzuki, A. Jackson, G.S. LeBlanc, K. Zingre, N. Nakamura, H. Sakai, H. Takaki, M. Izawa, T. Koseki, in: Proceedings of the 10th European Particle Accelerator Conference (EPAC'06), Edinburgh, Scotland, 2006, pp. 1325–1327.
[14] A.J. Hatch, Nucl. Instr. and Meth. 41 (1966) 261.