Nuclear Instruments and Methods in Physics Research A 607 (2009) 470–487

Contents lists available at ScienceDirect

Nuclear Instruments and Methods in Physics Research A

journal homepage: www.elsevier.com/locate/nima

Theory of edge radiation. Part II: Advanced applications

Gianluca Geloni *, Vitali Kocharyan, Evgeni Saldin, Evgeni Schneidmiller, Mikhail Yurkov

Deutsches Elektronen-Synchrotron (DESY), Hamburg, Germany

ARTICLE INFO

Article history:
Received 26 March 2009
Accepted 25 April 2009
Available online 8 May 2009

Keywords:
Edge radiation
Near-field
Electron-bunch diagnostics
X-ray free-electron laser (XFEL)

ABSTRACT

In this paper we exploit a formalism to describe edge radiation, which relies on Fourier optics techniques [G. Geloni, V. Kocharyan, E. Saldin, E. Schneidmiller, M. Yurkov, Theory of edge radiation. Part I: foundations and basic applications, submitted for publication]. First, we apply our method to develop an analytical model to describe edge radiation in the presence of a vacuum chamber. Such model is based on the solution of the field equation with a tensor Green's function technique. In particular, explicit calculations for a circular vacuum chamber are reported. Second, we consider the use of edge radiation as a tool for electron-beam diagnostics. We discuss coherent edge radiation, extraction of edge radiation by a mirror, and other issues becoming important at high electron energy and long radiation wavelength. Based on this work we also study the impact of edge radiation on X-ray Free-Electron Laser (XFEL) setups and we discuss recent results.

© 2009 Elsevier B.V. All rights reserved.

1. Introduction

It is the purpose of this article to conclude the discussion begun in Ref. [1] about the principles of production and properties for all applications of Edge Radiation (ER). In particular, in this paper we analyze a few advanced applications of our formalism.

In Ref. [1], a theory of near-field ER based on Fourier Optics (FO) techniques was developed within the framework of the more general Synchrotron Radiation (SR) theory, relying on the paraxial approximation. As has been demonstrated in that reference, any ER setup can be characterized, starting from the far-zone field, in terms of virtual sources. These sources exhibit a plane wavefront, and can be pictured as waists of laser-like beams. Using this kind of description one can use Fourier optics techniques to characterize the ER field at any distance, thus providing a tool for designing and analyzing ER setups.

Our previous study [1] made consistent use of both dimensional analysis and comparisons with outcomes from numerical simulation with the help of the computer code SRW [2].

There are, however, situations when existing computer codes cannot predict the radiation characteristics. One of these is the case when perturbations of the long-wavelength radiation by vacuum chambers are present, which may potentially affect the performance of ER setups. Since the diffraction size of THz radiation exceeds the vacuum chamber dimensions, characterization of far-infrared ER must be performed accounting for the presence of a waveguide. In order to deal with this situation we developed a theory of ER in a waveguide. The task to be solved differs from the unbounded-space case in the formulation of boundary conditions only. The paraxial approximation applies as in the unbounded-space case. However, on perfectly conducting walls the electric field must be orthogonal to the vacuum chamber surface. As in the unbounded-space case, one can use a Green's function approach to solve the field equations. The presence of different boundary conditions complicates the solution of the paraxial equation for the field, which can nevertheless be explicitly found by accounting for the tensorial nature of the Green's function. Here we take advantage of a mode-expansion approach to calculate ER emission in the metallic waveguide structure. We solve the field equations with a tensor Green's function technique,[1] and we extract figure of merits describing in a simple way the influence of the vacuum chamber on the radiation pulse as a function of the problem parameters. We put particular emphasis on a vacuum chamber with circular cross-section, which is natural for future linac-based sources (X-ray Free-Electron Lasers (XFELs) and Energy Recovery Linacs (ERLs) [3]).

Finally, we address the long-standing interest of electron-beam characterization for linac-based sources and laser-plasma accelerators. One possibility to perform electron-beam diagnostics in these kind of facilities is to use coherent ER. This is an attractive tool, because it can provide valuable and detailed information on the electron-beam. In principle, by detecting coherent ER, 3D distributions, divergence and microbunching may be measured. Usually, electrons in accelerators are highly collimated and monochromatic. In this case, coherent ER can be used for

* Corresponding author. Tel.: +49 40 8998 5450; fax: +49 40 8998 1905.
E-mail address: gianluca.aldo.geloni@desy.de (G. Geloni).

[1] It should be noted that one may provide an alternative formulation of the emission problem (in a waveguide or free-space) in terms of radiation modes [4,5].

0168-9002/$ - see front matter © 2009 Elsevier B.V. All rights reserved.
doi:10.1016/j.nima.2009.04.039

longitudinal and transverse beam-size monitoring. In contrast to this, electrons generated in laser-plasma interactions have different properties compared with those in conventional accelerators. Namely, in this case electrons have both divergence angle and energy distribution. We address applications of coherent ER by studying, first, the relatively simple case when only the influence of longitudinal and transverse structure factor of the electron bunch is accounted for. In particular, we give particular attention to the case when microbunching at optical wavelengths is imprinted onto an electron bunch, and we analyze the more complicated case of a bunch produced in a laser-plasma accelerator, i.e. accounting for divergence angle distribution of the beam. Energy distribution can be easily accounted for, based on this analysis. The problem of extraction of ER by a mirror, strictly related to diagnostics applications, is included too.

Since we will use the same notation in Ref. [1], here we will only briefly define the meaning of symbols, and we refer the reader to Ref. [1] for more exhaustive explanations.

2. Edge radiation in a waveguide

In Ref. [1] we considered edge radiation propagating in unbounded space. Here we extend our considerations to account for the presence of metallic surroundings (like e.g. the electron vacuum chamber), which effectively act like a waveguide.

The need to account for guiding structures in edge radiation setups arises when one wants to operate in the sub-millimeter wavelength range. Emission of edge radiation in the presence of metallic boundaries has been a much less-treated subject in literature, compared to the unbounded-space case. To the best of our knowledge, there is only one article reporting on edge radiation from electrons in a planar overmoded metallic waveguide [6]. The analysis in Ref. [6] is based on Lienard–Wiechert fields, modified by the presence of finite metallic boundary. To account for perfectly conducting plates, the author of Ref. [6] uses a generalization of the method of images, well-known from electrostatics [7]. Instead of this approach, here we prefer to use a mode-expansion technique. We characterize radiation from particles in guiding structures with the help of the proper tensor Green's function, automatically accounting for boundary conditions. The Green's function itself and the field are then conveniently expressed in terms of the natural modes of the guiding structure. This approach is shown to provide a convenient and methodical way to deal with the vectorial character of our problem. We apply our method to the case of a homogeneous waveguide with circular cross-section. This configuration approximates the vacuum chamber to be used at XFEL and Energy Recovery Linac facilities. Our approach, however, is very general and may be applied to other geometries, e.g. to rectangular waveguides, which approximate vacuum chambers used at SR facilities.

2.1. Definition of setup and position of the problem

To fix ideas we focus our attention on the setup in Fig. 1. Electrons travel through a typical edge radiation setup. We account for the presence of a waveguide with typical cross-section dimension ρ along a straight section of length L, delimited by bending magnets of radius R. Since electrons are bent away, one may assume that the vacuum chamber ends at the downstream bend position $z = L/2$. Our goal in this section is to calculate the field distribution at that position. The field distribution should be subsequently propagated up to the experimental station.

In Ref. [1] we introduced two dimensionless parameters controlling the characteristics of the radiation: $\delta = \sqrt[3]{R^2 \lambda\!\!\!^{-} L}$, related

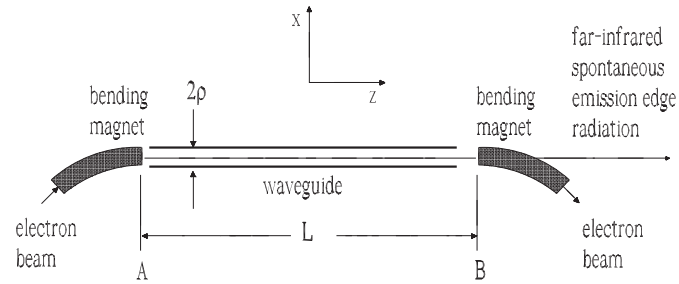

Fig. 1. Setup for edge radiation emission includes the presence of a waveguide with circular cross-section of radius ρ along the straight section.

with the sharp-edge approximation, and $\phi = L/(\gamma^2 \lambda\!\!\!^{-})$, γ being the relativistic factor and $\lambda\!\!\!^{-}$ the reduced wavelength, related to collimation of ER. Under the assumption $\delta \ll 1$, which is always considered valid, one can then extend the ER theory from unbounded space to the case when a waveguide is present. In unbounded space, the assumption $\delta \ll 1$ allowed us to apply the ER theory with given constraints on the angular region of observation: in fact, at large angles the SR contribution from bends is dominant compared to the ER contribution to the field. In other words, as we have seen, ER is a more collimated form of radiation, compared to bending magnet radiation. The presence of a waveguide seems at first glance to radically modify this viewpoint, because both SR from bends and ER is collected and guided into the vacuum chamber. However, we will see that this situation still carries a strong analogy with the unbounded-space case: while in unbounded space ER theory can be applied within a given angular region dependent on δ, in the waveguide case ER theory can be applied within a given wave-number range dependent on δ. As said above, after the field distribution is calculated at $z = L/2$, it has to be propagated up to the experimental station. Radiation will be collected within a finite acceptance angle. This finite acceptance can be seen as a low-pass filter for spatial frequencies. If the acceptance angle is small enough (and this depends on the value of δ) only spatial frequencies where ER is dominant will be accepted. Thus, one can conclude that both in the case of unbounded space and vacuum chamber, ER theory can be applied with given constraints on the acceptance angle of the setup.

Despite the fact that equations for the edge radiation source are significantly complicated by the presence of a waveguide, we find that these complications result in the appearance of a single dimensionless extra-parameter, namely the waveguide diffraction parameter $\Omega = \rho^2/(\lambda\!\!\!^{-} L)$. When $\phi \ll 1$ and $\delta \ll 1$, Ω is the only parameter of the problem and has a simple interpretation as the ratio between the waveguide cross-section area and the square of the radiation diffraction size of the ER virtual source located in the middle of the straight section in unbounded space.

The general theoretical framework of our extended ER theory relies on the solution of Maxwell's equations with modified boundary conditions, and follows closely the approach proposed in Ref. [8]. We wish to describe, in the space–frequency domain, radiation from an ultrarelativistic electron moving on a given trajectory inside a metallic vacuum chamber of arbitrary cross-section, homogeneous along the z-axis. An example is depicted in Fig. 2, where $\vec{n}$ is a vector field defined on the boundary surface S, such that $|\vec{n}| = 1$. At any point, $\vec{n}$ is orthogonal to S and points outwards and at this stage the waveguide cross-section is still considered arbitrary.

Since the electron is ultrarelativistic, the Lorentz factor γ obeys $1/\gamma^2 \ll 1$, and paraxial Maxwell's equations can be used in unbounded space. The presence of a waveguide introduces the extra-limitation $\lambda\!\!\!^{-} \ll \rho$. Paraxial approximation can be used under

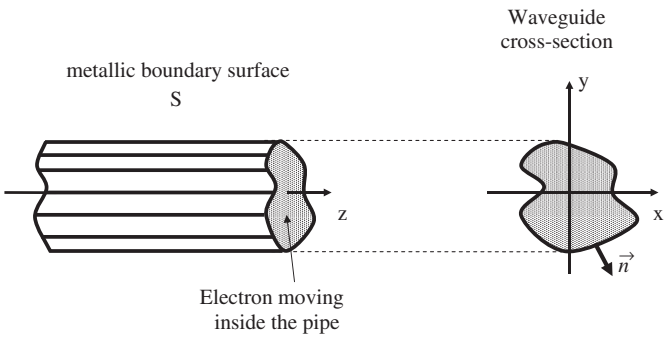

Fig. 2. Geometry of the problem. The electron is moving inside the vacuum chamber.

these two constraints. Then, the field equations read

$$\begin{cases} \left(\nabla_\perp^2 \vec{\tilde{E}} + \frac{2i\omega}{c}\partial_z \vec{\tilde{E}}\right) = \frac{4\pi e}{c}\exp\left[i\int_0^z d\bar{z}\frac{\omega}{2\gamma_z^2(\bar{z})c}\right] \\ \quad \times\left[\frac{i\omega}{c^2}\vec{v}_\perp(z) - \vec{\nabla}_\perp\right]\delta(\vec{r}-\vec{r}_0(z)) \\ (\vec{n}\times\vec{\tilde{E}})_{|s} = 0 \\ (\vec{\nabla}_\perp\cdot\vec{\tilde{E}})_{|s} = 0 \end{cases} \tag{1}$$

where $\vec{\tilde{E}}(z,\vec{r},\omega) = \vec{\tilde{E}}_\perp \exp[-i\omega z/c]$ is the slowly varying envelope of the Fourier transform $\vec{\tilde{E}}$ of the electric field at longitudinal position z and transverse position $\vec{r}$, with $\omega = c/\lambda\!\!\!^{-}$ and c the speed of light in vacuum. Here the second and the third equations define boundary conditions at the waveguide surface S. Functions $\vec{r}_0(z)$ and $\vec{v}_\perp(z)$ fix transverse position and velocity of the electron as a function of z, and $\gamma_z(\bar{z}) = [1-v_z(\bar{z})^2/c^2]^{-1/2}$, v_z indicating the longitudinal velocity of the electron.

As has been demonstrated in Refs. [8–10] the field $\vec{\tilde{E}}$ can be written in terms of Cartesian components as (compare with Eq. (11) of Ref. [1])

$$\begin{aligned} \tilde{E}^\alpha = \frac{4\pi e}{c}\int_{-\infty}^{z} dz' \Big\{ & \frac{i\omega}{c^2} v_\perp^\beta(z') G_\beta^\alpha(\vec{r},\vec{r}_0(z'),z-z') \\ & + [\partial'_\beta G_\beta^\alpha(\vec{r},\vec{r}',z-z')]_{\vec{r}'=\vec{r}_0(z')}\Big\} \\ & \times \exp\left[\frac{i\omega}{2c}\int_0^{z'}\frac{d\bar{z}}{\gamma_z^2(\bar{z})}\right] \end{aligned} \tag{2}$$

where derivatives ∂'_β are taken with respect to $\vec{r}'$, and $-\infty$ has to be taken as the point where the source harmonics begin to exist (in our case, at $z=-L/2$). Eq. (2) is the solution of the inhomogeneous field equation, describing the field from a single electron. We indicated with G_β^α the Cartesian components of a suitable tensorial Green's function for a homogeneous waveguide (along the z-axis):

$$\begin{aligned} G(\vec{r},\vec{r}',z,z') = & \frac{c}{2i\omega}\sum_j \Big\{ \exp\left[-\frac{ic\lambda_j^{\mathrm{TE}}}{2\omega}(z-z')\right] \\ & \times[\vec{e}_x\partial_y\psi_j^{\mathrm{TE}}(\vec{r}) - \vec{e}_y\partial_x\psi_j^{\mathrm{TE}}(\vec{r})] \\ & \otimes[\vec{e}_x\partial_{y'}\psi_j^{\mathrm{TE}}(\vec{r}') - \vec{e}_y\partial_{x'}\psi_j^{\mathrm{TE}}(\vec{r}')]\Big\} \\ & + \frac{c}{2i\omega}\sum_j \Big\{ \exp\left[-\frac{ic\lambda_j^{\mathrm{TM}}}{2\omega}(z-z')\right] \\ & \times[\vec{e}_x\partial_x\psi_j^{\mathrm{TM}}(\vec{r}) + \vec{e}_y\partial_y\psi_j^{\mathrm{TM}}(\vec{r})] \\ & \otimes[\vec{e}_x\partial_{x'}\psi_j^{\mathrm{TM}}(\vec{r}') + \vec{e}_y\partial_{y'}\psi_j^{\mathrm{TM}}(\vec{r}')]\Big\} \end{aligned} \tag{3}$$

where notation $\otimes$ indicates the tensor product. Here, $\vec{e}_x$ and $\vec{e}_y$ are unit vectors along Cartesian axes x and y, while $\psi_j^{\mathrm{TE,TM}}$ and $\lambda_j^{\mathrm{TE,TM}}$ are eigenfunctions and eigenvalues referring to the scalar problem:

$$\begin{cases} \nabla_\perp^2\psi_j^{\mathrm{TE,TM}}(\vec{r}) + \lambda_j^{\mathrm{TE,TM}}\psi_j^{\mathrm{TE,TM}}(\vec{r}) = 0 \\ \vec{n}\cdot(\vec{\nabla}_\perp\psi_j^{\mathrm{TE}})_{|s} = 0 \\ (\psi_j^{\mathrm{TM}})_{|s} = 0 \end{cases} \tag{4}$$

TE and TM, respectively, standing for Transverse Electric and Transverse Magnetic, with normalization condition

$$\int_s d\vec{r}|\vec{\nabla}\psi_j^{\mathrm{TE,TM}}|^2 = 1. \tag{5}$$

Note that here we derived Green's function Eq. (3) directly in paraxial approximation starting from Eq. (1) for the transverse components of the field.

Simplifications to Eq. (2) apply remembering that in our case $\vec{v}_\perp(z') = 0$ and $\vec{r}_0(z') = 0$. Setting $z = L/2$ one obtains

$$\tilde{E}^\alpha = \frac{4\pi e}{c}\int_{-L/2}^{L/2} dz'[\partial'_\beta G_\beta^\alpha(\vec{r},\vec{r}',z-z')]_{\vec{r}'=0}\exp\left[\frac{i\omega z'}{2c\gamma^2}\right]. \tag{6}$$

In a waveguide that is homogenous along the z-axis, only TM modes turn out to be driven by the uniform motion of the space-charge distribution. As a result, we can focus on TM modes only. This may be directly seen by calculating $\partial'_\beta G_\beta^\alpha$. A compact mathematical way proving this fact without cumbersome calculations is to note that TE modes appear in the expression for the tensorial Green's function, Eq. (3), through the combination $\vec{\nabla}\times(\psi_j^{\mathrm{TE}}\vec{e}_z) = \vec{e}_x\partial_y\psi_j^{\mathrm{TE}} - \vec{e}_y\partial_x\psi_j^{\mathrm{TE}}$. Then, TE modes contribute in $\partial'_\beta G_\beta^\alpha$ for $\vec{\nabla}\cdot[\vec{\nabla}\times(\psi_j^{\mathrm{TE}}\vec{e}_z)]$, which is the divergence of a curl and yields back zero. From a physical viewpoint this is a sound result. In fact, radiation is related with energy change of the particle, which happens through the scalar product $\vec{\tilde{E}}\cdot\vec{v}$. Since $\vec{v}_\perp(z') = 0$, TE modes cannot lead to any energy change of the electron. As a result, they are not excited. Note that $\vec{v}_\perp(z') = 0$ means that $\vec{r}_0(z') = \text{constant}$. Since the electron-beam trajectory should be centered, one recovers $\vec{r}_0(z') = 0$, leading to extra-simplifications in Eq. (6).

2.2. Theory of edge radiation in a circular waveguide

We now want to apply Eq. (6) to study the case of the setup in Fig. 1 in the presence of a circular waveguide with radius ρ. Therefore, we fix $z = L/2$ in Eq. (6). This allows us to calculate a field distribution at the end of the straight section, which acts as a source to be used for further propagation in unbounded space or through the beamline optics.

In order to explicitly compute the tensor Green's function in Eq. (3) we need to solve the problem in (4) with this particular choice of geometry. Because of the particular symmetry in the case of a circular waveguide, it is convenient to use transverse polar coordinates so that $\vec{r}$ is identified by radial distance $r = \sqrt{x^2+y^2}$ and angle $\varphi = \arctan(y/x)$.

Solutions of the equation set in (4) are

$$\psi_{mk1}^{\mathrm{TM}} = A_{mk}^{\mathrm{TM}} J_m(\nu_{mk}r)\sin(m\phi), \quad \psi_{mk2}^{\mathrm{TM}} = A_{mk}^{\mathrm{TM}} J_m(\nu_{mk}r)\cos(m\phi) \tag{7}$$

where ν_{mk} are defined as the roots of $J_m(\nu_{mk}) = 0$, and the normalization coefficients for TM modes, A_{mk}^{TM}, are given by

$$A_{mk}^{\mathrm{TM}} = \sqrt{\frac{a_m}{\pi}}\frac{1}{\nu_{mk}J_{m-1}(\nu_{mk})} \tag{8}$$

where $a_0 = 1$ and $a_m = 2$ for $m \geq 1$.

This leads to the following final result for the tensor Green's function components in Cartesian coordinates:

$$
\begin{aligned}
&G(\vec{r},\vec{r}',z-z')\\
&=\frac{c}{2i\omega}\sum_{m=0}^{\infty}\sum_{k=1}^{\infty}(A_{mk}^{TM})^2\left(\frac{\nu_{mk}}{2\rho}\right)^2\exp\left[-\frac{ic(z-z')}{2\omega\rho^2}\nu_{mk}^2\right]\\
&\times\left\{\begin{pmatrix}J_{m-1}(\nu_{mk}r/\rho)\sin[(m-1)\varphi]-J_{m+1}(\nu_{mk}r/\rho)\sin[(m+1)\varphi]\\ J_{m-1}(\nu_{mk}r/\rho)\cos[(m-1)\varphi]+J_{m+1}(\nu_{mk}r/\rho)\cos[(m+1)\varphi]\end{pmatrix}\right.\\
&\otimes\begin{pmatrix}J_{m-1}(\nu_{mk}r'/\rho)\sin[(m-1)\varphi']-J_{m+1}(\nu_{mk}r'/\rho)\sin[(m+1)\varphi']\\ J_{m-1}(\nu_{mk}r'/\rho)\cos[(m-1)\varphi']+J_{m+1}(\nu_{mk}r'/\rho)\cos[(m+1)\varphi']\end{pmatrix}\\
&+\begin{pmatrix}J_{m-1}(\nu_{mk}r/\rho)\cos[(m-1)\varphi]-J_{m+1}(\nu_{mk}r/\rho)\cos[(m+1)\varphi]\\ -J_{m-1}(\nu_{mk}r/\rho)\sin[(m-1)\varphi]-J_{m+1}(\nu_{mk}r/\rho)\sin[(m+1)\varphi]\end{pmatrix}\\
&\left.\otimes\begin{pmatrix}J_{m-1}(\nu_{mk}r'/\rho)\cos[(m-1)\varphi']-J_{m+1}(\nu_{mk}r'/\rho)\cos[(m+1)\varphi']\\ -J_{m-1}(\nu_{mk}r'/\rho)\sin[(m-1)\varphi']-J_{m+1}(\nu_{mk}r'/\rho)\sin[(m+1)\varphi']\end{pmatrix}\right\}
\end{aligned}
\tag{9}
$$

where we already dropped TE modes. Eq. (9) is valid in the case of a circular waveguide. These facts are demonstrated in Ref. [8]. As a result we have

$$
\begin{aligned}
\partial'_\beta G^1_\beta=&-\frac{c}{4i\omega}\sum_{m=0}^{\infty}\sum_{k=1}^{\infty}(A_{mk}^{TM})^2\left(\frac{\nu_{mk}}{\rho}\right)^3\exp\left[-\frac{ic(z-z')}{2\omega\rho^2}\nu_{mk}^2\right]\\
&\times J_m\left(\frac{\nu_{mk}r'}{\rho}\right)\\
&\times\left\{\left[J_{m-1}\left(\frac{\nu_{mk}r}{\rho}\right)\sin[(m-1)\varphi]-J_{m+1}\left(\frac{\nu_{mk}r}{\rho}\right)\sin[(m+1)\varphi]\right]\right.\\
&\times\sin(m\varphi')\\
&+\left[J_{m-1}\left(\frac{\nu_{mk}r}{\rho}\right)\cos[(m-1)\varphi]-J_{m+1}\left(\frac{\nu_{mk}r}{\rho}\right)\cos[(m+1)\varphi]\right]\\
&\left.\times\cos(m\varphi')\right\}
\end{aligned}
\tag{10}
$$

along $\vec{e}_x$ and

$$
\begin{aligned}
\partial'_\beta G^2_\beta=&-\frac{c}{4i\omega}\sum_{m=0}^{\infty}\sum_{k=1}^{\infty}(A_{mk}^{TM})^2\left(\frac{\nu_{mk}}{\rho}\right)^3\exp\left[-\frac{ic(z-z')}{2\omega\rho^2}\nu_{mk}^2\right]\\
&\times J_m\left(\frac{\nu_{mk}r'}{\rho}\right)\\
&\times\left\{\left[J_{m-1}\left(\frac{\nu_{mk}r}{\rho}\right)\cos[(m-1)\varphi]+J_{m+1}\left(\frac{\nu_{mk}r}{\rho}\right)\cos[(m+1)\varphi]\right]\right.\\
&\times\sin(m\varphi')\\
&-\left[J_{m-1}\left(\frac{\nu_{mk}r}{\rho}\right)\sin[(m-1)\varphi]+J_{m+1}\left(\frac{\nu_{mk}r}{\rho}\right)\sin[(m+1)\varphi]\right]\\
&\left.\times\cos(m\varphi')\right\}
\end{aligned}
\tag{11}
$$

along $\vec{e}_y$. A major simplification arises since $\vec{r}_0(z')=0$. Because of this, the only non-zero contribution to Eqs. (10) and (11) is for $m=0$, otherwise $J_m(\nu_{mk}r'/\rho)$ yields zero.

Substitution in Eq. (6) yields, therefore, the following result for the field at $z=L/2$:

$$
\vec{\tilde{E}}=-2ie\sqrt{\frac{\omega}{Lc^3}}\sum_{k=1}^{\infty}\mathscr{A}_k^\nu\left(\frac{L}{2}\right)J_1\left(\frac{\nu_{0k}r}{\rho}\right)\vec{e}_r
\tag{12}
$$

where

$$
\mathscr{A}_k^\nu(L/2)=\sqrt{\left(\frac{Lc}{\omega}\right)^3}\frac{\nu_{0k}\exp[-iC_k^\nu L/2]}{\rho^3J_1^2(\nu_{0k})}\operatorname{sinc}\left[\frac{L}{2}C_k^\nu+\frac{\phi}{4}\right].
\tag{13}
$$

Here we defined $C_k^\nu=\nu_{0k}^2c/(2\omega\rho^2)$ and $\vec{e}_r=\sin(\varphi)\vec{e}_x+\cos(\varphi)\vec{e}_y$. Eqs. (12) and (13) solve the problem of characterization of ER in the setup of Fig. 1 for $\delta\ll 1$.

It is interesting to show that the treatment of edge radiation in terms of virtual sources has a straightforward generalization for the case of a waveguide.

It is convenient to introduce the subject by first noting that Eq. (1), the non-homogenous Maxwell's equation with boundary conditions at the waveguide walls, admits a self-reproducing solution. Because of the circular cross-section of the waveguide, there is no preferential direction on the transverse plane. As a result, the transverse electric field must be radially polarized, and axially symmetric. We make the ansatz (i) $\vec{\tilde{E}}=E_r(r)E_z(z)\vec{e}_r$, and (ii) $E_z(z)=\exp[iz/(2\gamma^2\lambda\!\!\!^{-})]$. Note that (i) is already equivalent to postulating a self-reproducing field, meaning that the transverse shape of the field is independent of the longitudinal coordinate z down the waveguide. Substituting (i) and (ii) in Eq. (1) and shifting to polar coordinates we obtain the following problem for $E_r(\tilde{r})$:

$$
\begin{aligned}
&\tilde{r}\frac{d^2E_r}{d\tilde{r}^2}+\frac{dE_r}{d\tilde{r}}-\left(\tilde{r}+\frac{1}{\tilde{r}}\right)E_r=\frac{4\omega e}{c^2\gamma}\tilde{r}\frac{d}{d\tilde{r}}\left[\frac{\delta(\tilde{r})}{\tilde{r}}\right]\\
&\frac{d}{d\tilde{r}}(\tilde{r}E_r)_{|\tilde{r}=\tilde{\rho}}=0
\end{aligned}
\tag{14}
$$

where we introduced $\tilde{r}=r/(\gamma\lambda\!\!\!^{-})$ and $\tilde{\rho}=\rho/(\gamma\lambda\!\!\!^{-})$ ad hoc to simplify notations in Eq. (14). Solution of Eq. (14) yields the final result

$$
\vec{\tilde{E}}_{\text{s-rep}}=-\frac{2\omega e}{c^2\gamma}\exp\left[\frac{i\omega z}{2c\gamma^2}\right]\vec{e}_r\left[K_1\left(\frac{\omega r}{c\gamma}\right)+\frac{K_0\left(\frac{\omega\rho}{c\gamma}\right)}{I_0\left(\frac{\omega\rho}{c\gamma}\right)}I_1\left(\frac{\omega r}{c\gamma}\right)\right].
\tag{15}
$$

Eq. (15) is well-known (see e.g. Ref. [11]), and explicitly describes the self-reproducing nature of the field, because the transverse structure of the radiation field is fixed at any value z.

At each longitudinal coordinate z_i, the radiation field can be expanded in a series of modes of the passive (empty) waveguide. Although we have not calculated explicitly the coefficients in this expansion, these are independent of z, as $z=z_i$ has been fixed. This leads to a paradox. In fact, one can propagate each waveguide mode till another coordinate z_f. However, each mode of the passive waveguide has its own phase velocity. Therefore, one will not recover Eq. (15) at position z_f, because relative phases of modes have changed, at that position. The paradox is solved noting that the field in Eq. (15) represents a result for an active (loaded) waveguide. In other words, to obtain back Eq. (15), one should add to the propagated field the additional field radiated by the electron-beam between the points z_i and z_f, which is nothing but the edge radiation contribution from the setup in (1) with $A=z_i$ and $B=z_f$. In other words, in order to recover the self-reproducing field structure, we should add to the right-hand side of the propagation equation

$$
\tilde{E}^\alpha(z_f,\vec{r}_f)=-\frac{2i\omega}{c}\int d\vec{r}'\tilde{E}^\alpha(z_i,\vec{r}')G^\alpha_\beta(\vec{r}_f,\vec{r}',z_f-z_i)
\tag{16}
$$

where G is given in Eq. (9). Note that Eq. (16) generalizes Eq. (14) of Ref. [1]. It follows that

$$
\begin{aligned}
\tilde{E}^\alpha_{\text{s-rep}}(z_f,\vec{r}_f)=&-\frac{2i\omega}{c}\int d\vec{r}'\tilde{E}^\alpha_{\text{s-rep}}(z_i,\vec{r}')G^\alpha_\beta(\vec{r}_f,\vec{r}',z_f-z_i)\\
&+\frac{4\pi e}{c}\int_{z_i}^{z_f}dz'[\partial'_\beta G^\alpha_\beta(\vec{r}_f,\vec{r}',z_f-z')]_{\vec{r}'=0}\exp\left[\frac{i\omega z'}{2c\gamma^2}\right].
\end{aligned}
\tag{17}
$$

Note that the second term on the right-hand side of Eq. (17) is nothing but the edge radiation contribution from z_i to z_f (for $z_i=-L/2$ and $z_f=L/2$ one may compare with Eq. (6)). Eq. (17) can

be rewritten as

$$\vec{\tilde{E}}_{\rm ER}(L/2,\vec{r}) = \frac{4\pi e}{c}\int_{z_i}^{z_f} dz'[\partial'_\beta G^\alpha_\beta(\vec{r}_f,\vec{r},z_f-z')]_{\vec{r}'=0}\exp\left[\frac{i\omega z'}{2c\gamma^2}\right]$$
$$= \tilde{E}^\alpha_{s2,\vec{r}}(L/2) - \frac{2i\omega}{c}\int d\vec{r}'\tilde{E}^\alpha_{s1}(-L/2,\vec{r}')G^\alpha_\beta(\vec{r},\vec{r}',L) \qquad (18)$$

where we defined $\vec{\tilde{E}}_{s1}(-L/2) = -\vec{\tilde{E}}_{\text{s-rep}}(-L/2)$ and $\vec{\tilde{E}}_{s2}(L/2) = \vec{\tilde{E}}_{\text{s-rep}}(L/2)$. Having introduced this notation we are in the position to see that the treatment of edge radiation in terms of virtual sources has a straightforward generalization for the case of a waveguide. In fact, Eq. (18) means that the edge radiation field can be interpreted as the sum of a given field distribution $\tilde{E}^\alpha_{s2,\vec{r}}(L/2)$ at $z=L/2$ plus the field obtained propagating another field distribution, $\tilde{E}^\alpha_{s1}(-L/2,\vec{r}')$, from $z=-L/2$ up to $z=L/2$ according to Eq. (16). We thus straightforwardly interpret $\vec{\tilde{E}}_{s1,s2}$ as the generalized virtual sources at $z=-L/2$ and $z=L/2$, respectively. Note that in the limit for $\rho\longrightarrow\infty$, the self-reproducing field solution in Eq. (15) is related to the virtual source fields in Eq. (39) of Ref. [1] consistently with what has just been stated.

Also note that Eqs. (18) and (12) present the same field, and must coincide. This hints to the fact that the sum in Eq. (12) can be calculated analytically. Since the use of virtual sources provides conceptual insight and should facilitate the design of ER setups, it is instructive to explicitly demonstrate the equivalence of Eqs. (18) and (12). This is demonstrated in Appendix A.

2.3. Analysis of results (exemplifications)

We now analyze our main results, Eqs. (12) and (13). To this purpose, it is convenient to re-write these equations in normalized units, so that

$$\vec{\hat{E}} = -2i\sum_{k=1}^{\infty}\mathscr{A}^v_k(\hat{z})J_1\left(\frac{\nu_{0k}\hat{r}}{\sqrt{\Omega}}\right)\vec{e}_r \qquad (19)$$

with

$$\mathscr{A}^v_k(\hat{z}) = \frac{\nu_{0k}\exp[-i\hat{C}^v_k\hat{z}]}{\Omega^{3/2}J_1^2(\nu_{0k})}\,\text{sinc}\left[\frac{1}{2}\hat{C}^v_k+\frac{\phi}{4}\right] \qquad (20)$$

where we defined $\hat{C}^v_k = C^v_k L = \nu^2_{0k}/(2\Omega)$, we reminded $\Omega=\rho^2/(\lambda\!\!\!^{-}L)$, and normalized quantities $\vec{\hat{E}}$, $\hat{r}$ and $\hat{z}$ are defined as in unbounded space (see Ref. [1]), $\vec{\hat{E}} \equiv \vec{\tilde{E}}\sqrt{\lambda\!\!\!^{-}L}c/e$, $\vec{\hat{r}} = \vec{r}/\sqrt{\lambda\!\!\!^{-}L}$ and $\hat{z}=z/L$.

Note that, with reference to Fig. 1, we are assuming $\hat{z}<\frac{1}{2}$, because for $\hat{z}>\frac{1}{2}$ we are already in unbounded space. Using Green's function G^α_β we can formally propagate the field at $\hat{z}=\frac{1}{2}$, i.e. Eq. (12), up to positions $\hat{z}<\frac{1}{2}$. Note that, since Eq. (12) is presented as a sum of empty-waveguide modes, this propagation just modifies the exponential (phase) factor, so that instead of $\exp[-i\hat{C}^v_k/2]$ we find $\exp[-i\hat{C}^v_k\hat{z}]$ in Eq. (19). Then, Eq. (19) assumes the meaning of a virtual-field distribution in analogy with the unbounded-space case.

Also note that the sinc(·) function in the expression for $\mathscr{A}^v_k$ is a direct consequence of our model of the setup of sharp-edges at positions $\hat{z}=-\frac{1}{2}$ and $\frac{1}{2}$, respectively. In fact, the sinc(·) function is the Fourier transform of a rectangular function with respect to $\hat{C}^v_k+\phi/2$, modelling the sharp switch on and switch off of the bunch harmonics. The presence of high-frequency components in the rectangular function implies the presence of contributions with high values of k. In its turn, each contribution with large value of k in Eq. (19) can be interpreted as a superposition of plane waves propagating at angles $\nu_{0k}/\sqrt{\Omega}$ in units of the diffraction angle $\sqrt{\lambda\!\!\!^{-}/L}$. Thus, higher values of k correspond to the introduction of high spatial frequency components in the field.

However, we should account for the fact that our theory applies with a finite accuracy related to the value of the parameter δ. When using this approximation we neglect contributions to the field with an accuracy related with δ. This means that, in the analysis of our results, it does not make sense to consider high spatial frequency contributions due to abrupt switching of the bending magnet fields on a scale shorter than $\sqrt[3]{R^2\lambda\!\!\!^{-}}$, because these are outside of the accuracy of the sharp-edge approximation. We may then introduce a spatial frequency filter in our expression for the field by replacing Eq. (6) with

$$\tilde{E}^\alpha = \frac{4\pi e}{c}\int_{-\infty}^{z} dz' S(z')[\partial'_\beta G^\alpha_\beta(\vec{r},\vec{r}',z-z')]_{\vec{r}'=0}\exp\left[\frac{i\omega z'}{2c\gamma^2}\right] \qquad (21)$$

where the function $S(z')$ introduces some smoothing of the rectangular profile on a scale $\sqrt[3]{R^2\lambda\!\!\!^{-}}$. In normalized units Eq. (21) reads

$$\hat{E}^\alpha = 4\pi\int_{-\infty}^{\hat{z}} d\hat{z}' S(\hat{z}')[\partial'_\beta \hat{G}^\alpha_\beta(\vec{\hat{r}},\vec{\hat{r}}',\hat{z}-\hat{z}')]_{|\vec{\hat{r}}'=0}\exp\left[\frac{i\phi\hat{z}'}{2}\right] \qquad (22)$$

where derivatives are now calculated with respect to normalized quantities.

We model $S(\hat{z}')$ as a constant function along the straight section length with exponentially decaying edges[2] on a typical (normalized) distance Δ:

$$S(\hat{z}') = \begin{cases} \exp[-(\hat{z}'+1/2)^2/(2\Delta^2)] & \text{for } \hat{z}'<-1/2 \\ 1 & \text{for } -1/2<\hat{z}'<1/2 \\ \exp[-(\hat{z}'-1/2)^2/(2\Delta^2)] & \text{for } \hat{z}'>1/2. \end{cases} \qquad (23)$$

It follows that Eq. (20) should be replaced by

$$\mathscr{A}^v_k(\hat{z}) = \frac{\nu_{0k}\exp[-i\hat{C}^v_k\hat{z}]}{\Omega^{3/2}J_1^2(\nu_{0k})}\mathscr{F}\{S(\hat{z}'),(\hat{C}^v_k+\phi/2)\} \qquad (24)$$

where $\mathscr{F}\{S(\hat{z}'),(\hat{C}^{\mu,v}_k+\phi/2)\}$ is the Fourier transform of the function S with respect to $(\hat{C}^{\mu,v}_k+\phi/2)$. The introduction of the function $S(\hat{z}')$ introduces a suppression of higher frequency components of $\mathscr{F}\{S\}$, and corresponds to a suppression of higher spatial frequencies in the field distribution, i.e. to a smoother field distribution. For a fixed value of Ω and $\hat{z}$ we qualitatively expect finite and smooth field distribution for finite values of Δ. On the contrary, in the sharp-edge limit for $\Delta\longrightarrow 0$, the field must diverge for some value of $\hat{r}$, as a result of the already discussed divergence of the integrated flux and of the fact that the radius of the vacuum chamber is finite. Note that the level of high spatial frequencies depends in a complicated way on Ω, because the perfectly metallic waveguide effectively acts as a mirror. The value of Δ should be actually chosen to cut off high spatial frequencies that are outside the region of applicability of the sharp-edge approximation, i.e. $\Delta\sim\delta$. Thus, the correct value of Δ depends, case by case, on the type of setup considered. The Fourier transform of the function $S(\hat{z}')$ in Eq. (23) to be inserted into Eq. (24) reads

$$\mathscr{F}\left\{S(\hat{z}'),\left(\hat{C}^{v,\mu}_k+\frac{\phi}{2}\right)\right\}$$
$$= \text{sinc}\left[\frac{\hat{C}^{v,\mu}_k}{2}+\frac{\phi}{4}\right] + \sqrt{2\pi}\Delta\exp\left[-\frac{\Delta^2}{2}\left(\hat{C}^{v,\mu}_k+\frac{\phi}{2}\right)^2\right]$$
$$\times\left\{\cos\left[\frac{\hat{C}^{v,\mu}_k}{2}+\frac{\phi}{4}\right] - \sin\left[\frac{\hat{C}^{v,\mu}_k}{2}+\frac{\phi}{4}\right]\text{erfi}\left[\frac{\Delta}{\sqrt{2}}\left(\hat{C}^{v,\mu}_k+\frac{\phi}{2}\right)\right]\right\} \qquad (25)$$

[2] Formally, such model is in contrast with the previous statement that for $\hat{z}>\frac{1}{2}$ we are in unbounded space. However, we introduce Δ to account for a finite accuracy of the sharp-edge approximation. Thus, it does not make sense to specify where the unbounded space begins within a distance Δ.

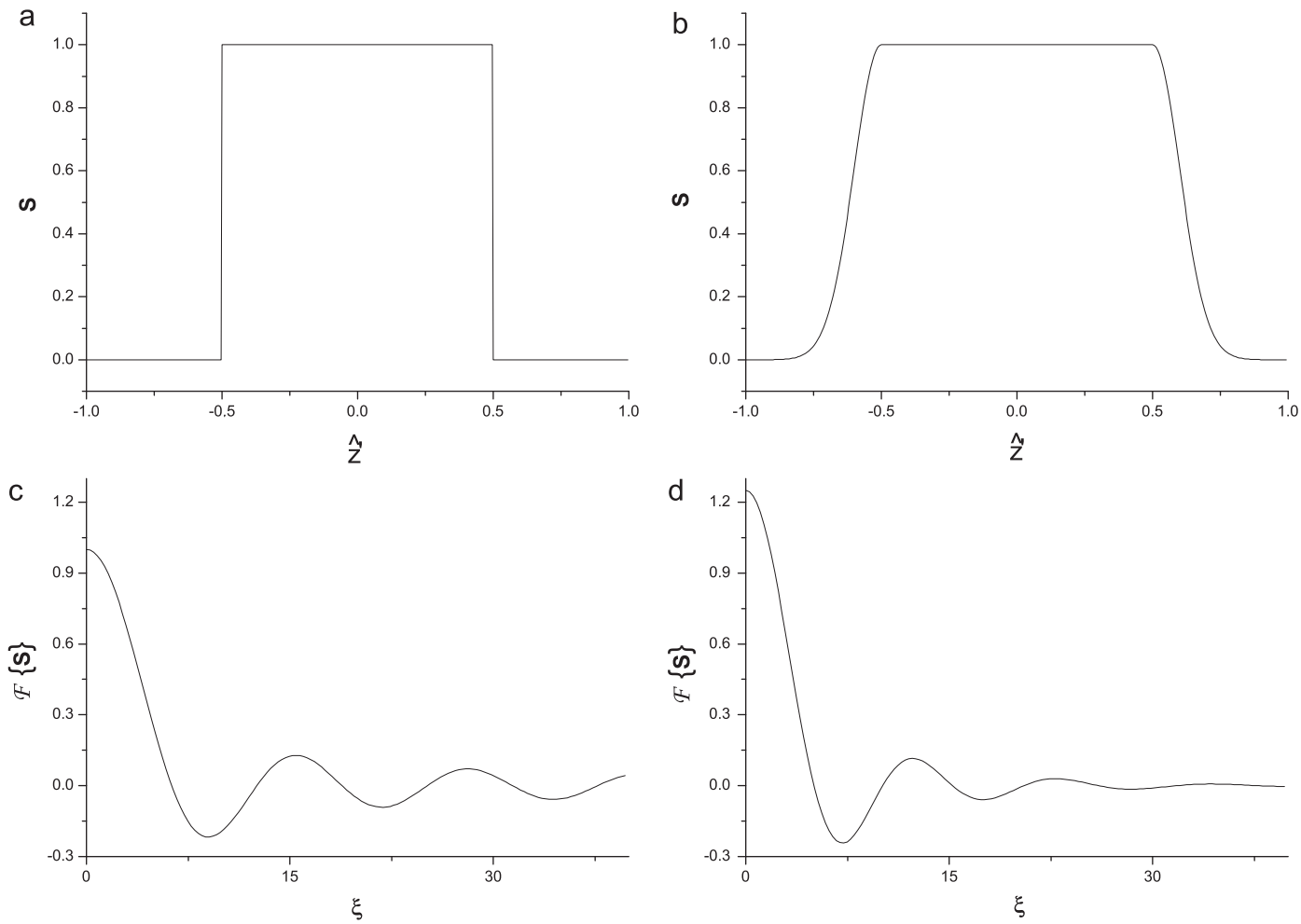

Fig. 3. Comparison between hard-edge case and high-frequency filtering. Function $S(\hat{z}')$ in the hard-edge case with $\Delta = 0$ (a) and in the case when filtering is applied with $\Delta = 0.1$ (b). Their Fourier transforms $\mathscr{F}\{S\}$ with respect to $\xi = \hat{C}_k^{\mu,\nu} + \phi/2 > 0$ are plotted in (c) for the hard-edge case and in (d) when filtering is present.

where the imaginary error function erfi(·) is defined as

$$\mathrm{erfi}(z) = \frac{1}{i}\mathrm{erf}(iz) = \frac{2}{i\sqrt{\pi}}\int_0^{iz} \exp[-t^2]\,dt. \tag{26}$$

Fig. 3presents a comparison between functions S and $\mathscr{F}\{S\}$ for $\Delta = 0.1$ and 0. A filtering effect can be clearly seen, suppressing higher frequency components of $\mathscr{F}\{S\}$.

Eqs. (19) and (20) completely describe ER in the presence of a circular waveguide. Position $\hat{z} = 0$ corresponds to the single virtual source description discussed before. In fact, as we have seen, the concept of laser-like radiation beam can be naturally extended to the case a waveguide is present. As said before one must carefully select the number of modes used for computation, according to $k \gg \sqrt{\Omega}$.

We further consider, as an example, the limit for $\phi \ll 1$. In Fig. 4 we show a comparison between the analytic expression for the intensity distribution $\hat{I}$ at the virtual source position, and numerical expressions obtained through Eq. (19) for different values of Δ at $\Omega = 1000$ and 100. Differences between results for $\Delta = 0.1$ and Eq. (31) of Ref. [1] should be taken as exemplification of the filtering process. A 3D view of the intensity profile of the virtual source for $\Omega = 5$ and $\Delta = 0.1$ is shown in Fig. 5, to be compared with Fig. 9 of Ref. [1] for the unbounded-space limit. The number of modes used in all plots is in all cases much larger than $\sqrt{\Omega}$. Furthermore, we verified that results do not change by changing the number of modes used in the computation, provided that condition $k_{\max} \gg \sqrt{\Omega}$ is fulfilled. We also checked that the same results obtained with the help of Eq. (19) can also be recovered by introducing apodization directly in Eq. (19) of Ref. [1]. This confirms that numerical evaluation of Eq. (19) is sound.

The behavior of the intensity profile at the virtual source when waveguide effects are important is shown in Fig. 6 for different values of Ω at $\Delta = 0.01$ and 0.1. Further on, in Fig. 7 we plot the intensity distribution $\hat{I} = |\hat{E}|^2$ as a function of the reduced radius $\hat{r}$ for the same values of Δ and Ω at $\hat{z} = \frac{1}{2}$. All plots are evaluated with the help of Eq. (19). It should be remarked that the wavefront at $\hat{z} = \frac{1}{2}$ is not plane (as at $\hat{z} = 0$) and the phase distribution carries important information when one needs to propagate the field from $\hat{z} = \frac{1}{2}$ to any other point. The derived analytical algorithm in Eq. (19) enables one to calculate all these information.

Comparison of the cases for $\Delta = 0.01$ and 0.1 clearly shows the effect of different edge dimensions, corresponding to filtering of high spatial frequencies. It should be reminded that when $\Delta = 0$ the angle-integrated spectral flux of ER is divergent in the unbounded space, as well as in a waveguide. Such divergency was motivated as an effect of the sharp-edge approximation, and depends logarithmically on Δ.

To sum up, knowledge of the field at $\hat{z} = \frac{1}{2}$ fulfills our goal for this section. Expression for the field at $\hat{z} = \frac{1}{2}$ can be interpreted as a virtual-field distribution. From this viewpoint, the presence of a finite parameter Δ corresponds to the presence of an angular filter,

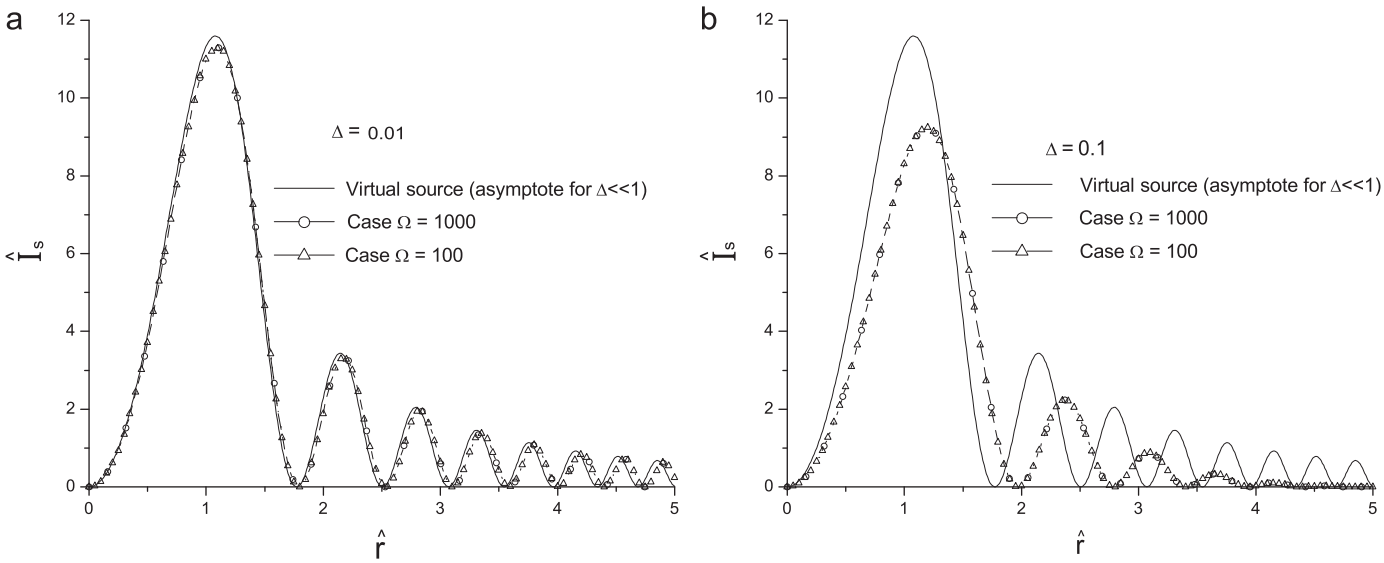

Fig. 4. Intensity profiles of the virtual source ($\hat{z}=0$) at large values of $\Omega = R^2/(\bar{\lambda}L_w)$ for different values of Δ in the limit for $\hat{\phi} \ll 1$. These plots are obtained from Eqs. (19) and (24), while the asymptotic limit for $\Delta \ll 1$ is found with the help of Eq. (31) of Ref. [1].

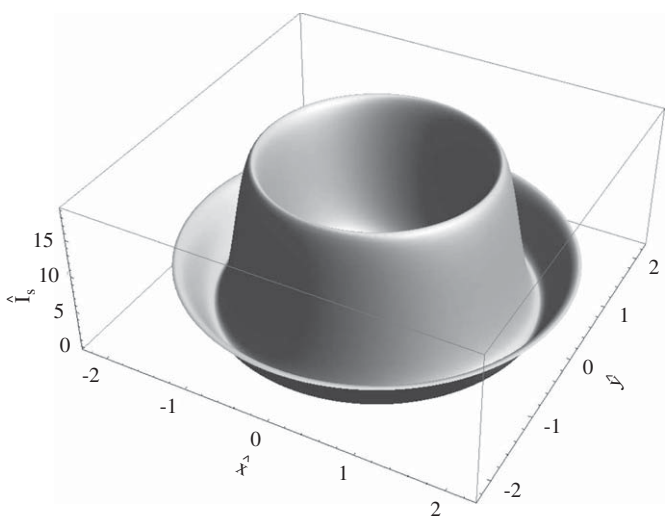

Fig. 5. Three-dimensional plot of the intensity profile of the virtual source ($\hat{z}=0$) at $\Omega = R^2/(\bar{\lambda}L_w) = 5$ for $\Delta = 0.1$ in the limit for $\hat{\phi} \ll 1$.

related to the violation of ER expression for angles comparable with the bending magnet radiation angle. The virtual-field distribution at $\hat{z}=\frac{1}{2}$ should be further propagated either in the unbounded space or through any other kind of vacuum chamber up to the experimental station. In other words, the knowledge of the field at the straight section exit constitutes the starting point for further propagation. Typically, a user-beamline vacuum chamber will be connected with the electron vacuum chamber (that follows the bending magnet after position $\hat{z}=\frac{1}{2}$). The user-beamline vacuum chamber has a typical characteristic size which is larger than the electron vacuum chamber. It follows that, after position $\hat{z}=\frac{1}{2}$, the field can usually be propagated as in unbounded space.

3. Coherent edge radiation

The physics of radiation processes from electron-beams critically depends on the ratio of the bunch length to the wavelength of the emitted radiation. We can thus define two opposite asymptotes for the electron-bunch length, corresponding to very different characteristics of radiation.

In the first limit, when the electron bunch is long compared to the radiation wavelength, one deals with the conventional case of spontaneous radiation. In this regime the electron phases are not correlated, i.e. distances between electrons are randomly distributed on a characteristic scale much longer than the radiation wavelength. Incoherent superposition of each electron contribution to the radiation field yields low-power emission, proportional to the charge in the bunch, with the usual incoherent phase-noise statistics.

In the second limit, when the electron bunch is short compared to the radiation wavelength, one deals with the case of coherent radiation. Electron phases are correlated, in the sense that random variations of distances between electrons are distributed on a characteristic scale shorter than the radiation wavelength. The bunch essentially behaves as a single point-charge, which coherently emits high-power radiation. In this case, the radiation power scales quadratically with the total electric charge in the bunch, rather than linearly as in the other limit. It is because of this quadratic effect that the radiation power can be greatly enhanced, because the bunch population is usually of order 10^{10} particles.

Coherent radiation is usually not emitted in electron storage rings, because the bunch length is of order of a centimeter. However, in linear accelerators, much shorter electron bunches of the order of 100 μm can be produced in magnetic bunch compressors. In this section we will discuss the physics of coherent ER distinguishing two cases, when coherent emission is due to an overall temporal bunch profile shorter than the wavelength or to short structures (microbunches of order of the radiation wavelength) superimposed to the temporal profile of the bunch.

When it comes to the use of ER as a diagnostic tool, the availability of a much larger number of photons constitutes an important advantage of coherent ER compared to the incoherent case. By detecting coherent ER, characteristics of the electron bunch such as their 3D distribution and divergence can be measured. Moreover, coherent radiation presents the unique feature that electron-beam microbunching can be investigated too.

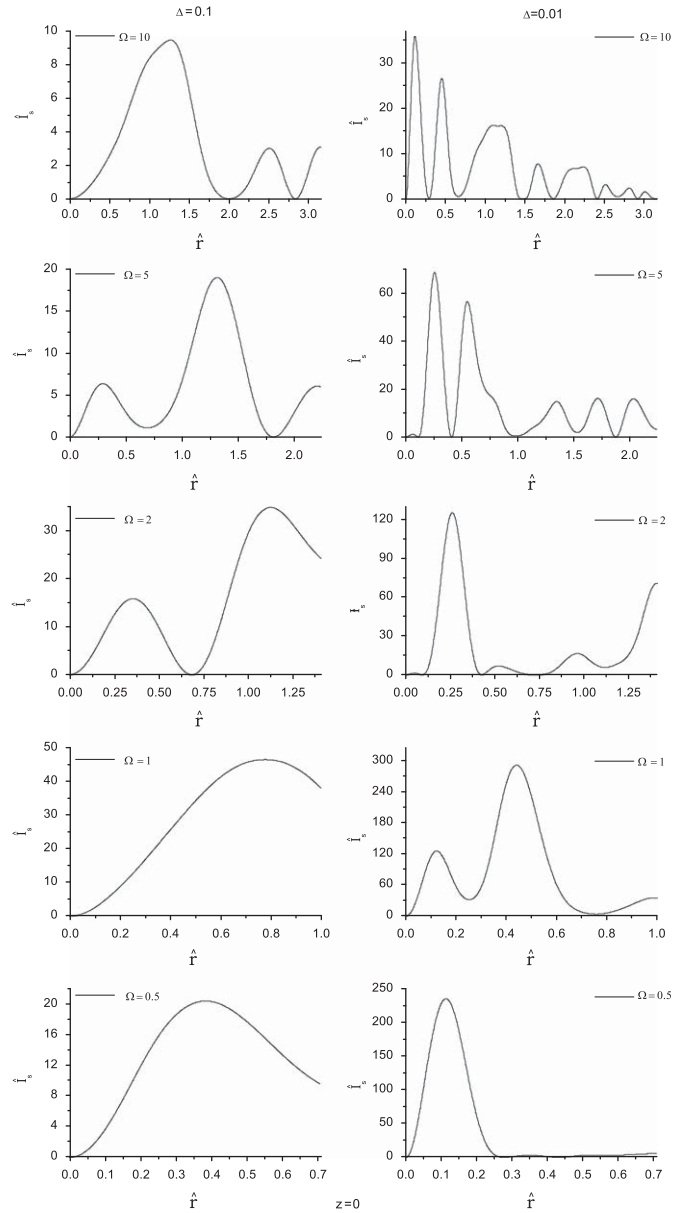

Fig. 6. Intensity profiles of the virtual source ($\hat{z}=0$) at different values of $\Omega = R^2/(\lambda\!\!\!^{-}L_w)$ for $\hat{\phi} \ll 1$ at two values $\Delta = 0.1$ and 0.01.

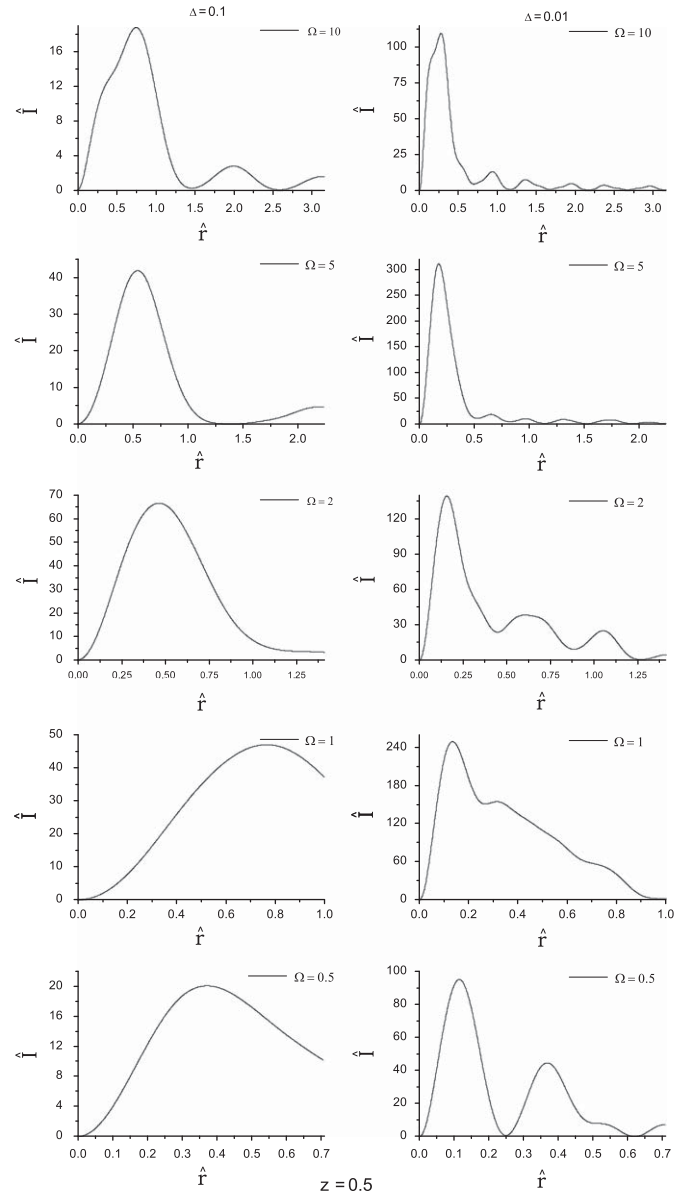

Fig. 7. Intensity profiles at $\hat{z}=\frac{1}{2}$ at different values of $\Omega = R^2/(\lambda\!\!\!^{-}L_w)$ for $\hat{\phi} \ll 1$ at two values $\Delta = 0.1$ and 0.01.

3.1. Review of known methods

There are two equivalent approaches to describe coherent SR in general: a Lagrangian approach and a Eulerian approach.

In the Lagrangian approach particles are labelled with a given index, and the motion of individual charges is followed through space. One follows the evolution of each particle as a function of energy deviation, angular direction, position and arrival time at a given reference (longitudinal) position. Knowing the evolution of each particle, individual contributions to the field are separately calculated and summed up.

In the Eulerian approach instead, one begins defining charge density $\rho(\vec{r},z,t)$ and current density $\vec{j}(\vec{r},z,t)$, i.e. particular field quantities, as a function of coordinates and time. One is no more interested in knowing the evolution of each single particle but only to observe charges passing through a given longitudinal position, in order to obtain information about ρ and $\vec{j}$. Once these two fields are determined, one can solve Maxwell's equations for the electric field, with ρ and $\vec{j}$ as macroscopic electromagnetic sources.

3.1.1. Lagrangian approach

We consider an electron bunch moving along a setup composed by a straight section delimited by two bends, in free-space.

Given a reference point (e.g. $z=0$ in the middle of the straight section) along the trajectory one may specify the phase-space coordinates of a given electron with the help of six data: position of the electron, $\vec{l}$, angular deflection $\vec{\eta}$, energy $\delta\gamma$, and arrival time, τ, all relative to the position of a reference electron with position $\vec{r}_0(0)$, transverse velocity $\vec{v}_{\perp 0}(0)$, nominal energy $\mathscr{E}_0$ and arrival time $t=0$, all given at position $z=0$. Using the index k to identify a certain particle one finds the temporal Fourier transform of the

radiation pulse at a given frequency ω as a sum of many independent contributions:

$$\vec{\tilde{E}}(\vec{r},z,\omega)=\sum_{k=1}^{N_e}\vec{\tilde{E}}_{(1)}\left(\vec{l}_k,\vec{\eta}_k,\delta\gamma_k,\tau_k;\vec{r},z,\omega\right) \tag{27}$$

where N_e is the total number of particles in the bunch, and $\vec{\tilde{E}}_{(1)}$ is the single-particle field contribution from a given particle identified by variables $\vec{l}_k,\vec{\eta}_k,\delta\gamma_k,\tau_k$. Note that we separated these variables from the space–frequency coordinates where the field is calculated with a semicolon.

Eq. (27) forms the basis for calculating the angular spectral flux of radiation. This is essentially done by taking the square modulus of the field in Eq. (27) and averaging over an ensemble of bunches:

$$\begin{aligned}\frac{dW}{d\omega\, d\Omega}&=\frac{cz^2}{4\pi^2}\langle|\vec{\tilde{E}}|^2\rangle\\&=\frac{cz^2}{4\pi^2}\left\langle\left|\sum_{k=1}^{N_e}\vec{\tilde{E}}_{(1)}(\vec{l}_k,\vec{\eta}_k,\delta\gamma_k,\tau_k;\vec{r},z,\omega)\right|^2\right\rangle.\end{aligned} \tag{28}$$

Let us show that in the particular case when no focusing elements are present, $\vec{\tilde{E}}_{(1)}$ in the far-zone depends on $\vec{l}_k$ through a phase only. To this purpose, it is sufficient to perform the substitution $\vec{r}_0(z')\longrightarrow\vec{r}_0(z')+\vec{l}$ in the expression for a single-particle field in the far-zone [1]:

$$\begin{aligned}\vec{\tilde{E}}(z,\vec{\theta})=&-\frac{i\omega e}{c^2 z}\int_{-\infty}^{z}dz'\left(\frac{\vec{v}_\perp(z')}{c}-\vec{\theta}\right)\\&\times\exp\left[i\omega\int_0^{z'}\frac{d\bar{z}}{2c\gamma_z^2(\bar{z})}+\frac{i\omega}{2c}(z\theta^2-2\vec{\theta}\cdot\vec{r}_0(z')+z'\theta^2)\right]\end{aligned} \tag{29}$$

where $\vec{\theta}=\vec{r}/z$ defines the observation direction, and $\theta\equiv|\vec{\theta}|$.

Such substitution leads straightforwardly to the phase $-\omega\vec{\theta}\cdot\vec{l}/c$. Thus, in the particular case when there are no focusing elements and electrons have random arrival times (phases) and random offsets, but no energy spread, nor deflections, Eq. (28) yields

$$\begin{aligned}\frac{dW}{d\omega\, d\Omega}&=\frac{cz^2}{4\pi^2}\left\langle\sum_{m,n=1}^{N_e}|\vec{\tilde{E}}_{(1)}(\vec{r},z,\omega)|^2\exp[i\omega(\tau_m-\tau_n)]\right.\\&\quad\left.\times\exp\left[-\frac{i\omega}{cz}\vec{r}\cdot(\vec{l}_m-\vec{l}_n)\right]\right\rangle\\&=\frac{cz^2}{4\pi^2}|\vec{\tilde{E}}_{(1)}(\vec{r},z,\omega)|^2\left\{N_e+\sum_{m\neq n}\langle\exp[i\omega(\tau_m-\tau_n)]\rangle\right.\\&\quad\left.\times\left\langle\exp\left[-\frac{i\omega}{cz}\vec{r}\cdot(\vec{l}_m-\vec{l}_n)\right]\right\rangle\right\}\\&=\frac{cz^2}{4\pi^2}|\vec{\tilde{E}}_{(1)}(\vec{r},z,\omega)|^2\cdot N_e\left[1+(N_e-1)|\bar{f}_t(\omega)|^2\left|\bar{f}_l\left(\frac{\omega\vec{r}}{cz}\right)\right|^2\right]\end{aligned} \tag{30}$$

having recognized that if f_t is the longitudinal bunch profile and f_l the offset distribution at the reference position $z=0$, one has

$$\langle\exp(i\omega\tau_k)\rangle=\int_{-\infty}^{\infty}d\tau_k f_t(\tau_k)\exp(i\omega\tau_k)\equiv\bar{f}_t(\omega) \tag{31}$$

and

$$\left\langle\exp\left(-\frac{i\omega}{cz}\vec{r}\cdot\vec{l}_k\right)\right\rangle=\int_{-\infty}^{\infty}d\vec{l}_k f_l\left(\vec{l}_k\right)\exp\left(-\frac{i\omega}{cz}\vec{r}\cdot\vec{l}_k\right)\equiv\bar{f}_l\left(-\frac{\omega\vec{r}}{cz}\right). \tag{32}$$

In the rest of this section we will mainly concentrate on the second term in Eq. (30), scaling as $\sim N_e(N_e-1)$, i.e. the coherent term. Although Eq. (30) is known (see e.g. Refs. [12–14]), we choose to shortly report it, because it is still the object of revisions in recently published articles [15–17], where the angular spectral flux of spontaneous Transition Radiation (TR) is found to obey a modified angular distribution depending on the transverse distribution of electrons (see e.g. Eq. (25) of Ref. [17], dealing with the case of an infinitely large mirror). In the next section we will demonstrate a transition radiation setup can be formally dealt with as if it were an edge radiation setup. While an exponential cutoff is to be expected in the coherent angular spectral flux, results in Refs. [15–17] indicating a dependence of the incoherent angular spectral flux on the transverse distribution of electrons is counterintuitive. In fact, as we have seen, the spectrum is calculated by first summing single-electron contributions to the field and, second, by averaging the square modulus of the field over an ensemble of bunches. As we have discussed above, a given offset modifies the far-field contribution from a single electron by a phase factor only. Our conclusion, in contrast with Refs. [15–17], is that the final incoherent spectrum cannot depend on the transverse distribution of electrons. The incorrectness of Refs. [15–17] is due to a calculus mistake, which can be found e.g. in Eq. (19) of Ref. [17]: the average of the square modulus of a quantity, in fact, is not equal to the square modulus of the average.

Let us go back to the most general situation described in Eq. (27). One can represent the sum in Eq. (27) in terms of an integral over a continuous phase-space distribution of electrons specified at a given position z. Let us assume for simplicity that this reference position is $z=0$, i.e. in the middle of the straight section. We will indicate the phase-space distribution at $z=0$ with $f(\vec{l},\vec{\eta},\delta\gamma,\tau;0)$. Eq. (27) can then be substituted with an average of the single-particle field over f, yielding

$$\begin{aligned}\vec{\tilde{E}}(\vec{r},z,\omega)=N_e\int d\vec{l}\,d\vec{\eta}\,d(\delta\gamma)\,d\tau f(\vec{l},\vec{\eta},\delta\gamma,\tau;0)\vec{\tilde{E}}_{(1)}\\\times(\vec{l},\vec{\eta},\delta\gamma,\tau;\vec{r},z,\omega).\end{aligned} \tag{33}$$

Note that substitution of Eq. (27) with Eq. (33) rules out the possibility of recovering the incoherent term in Eq. (30). In fact, the continuous phase-space distribution f already includes an average over an ensemble of bunches. In other words, Eq. (33) has the meaning of a mean field, whose square modulus is essentially the second term in Eq. (30), i.e. the coherent term.

3.1.2. Eulerian approach

Up to now we have been using a microscopic approach, where the single-electron field is averaged over the 6D phase-space distribution of electrons. It is possible to obtain the same results using a macroscopic viewpoint, where solution of Maxwell's equations is found with given macroscopic charge density $\rho(\vec{r},z,t)$ and current density $\vec{j}(\vec{r},z,t)$. In this case, one can integrate Maxwell's equations with the help of the usual Green's function.

We begin by writing a general expression for the temporal Fourier transform of charge and current density in terms of the phase-space distribution at a given position down the beamline z. Such phase-space distribution, $f(\vec{r},\vec{v}_\perp/c,\gamma,t,z)$ can always be written as $f(\vec{l}+\vec{r}_0(z),\vec{\eta}+\vec{v}_{\perp 0}(z)/c,\gamma_0+\delta\gamma,\tau+s(z)/v_0,z)$ where, as we have seen before, the subscript "0" refers to the constrained motion of an electron with $\vec{r}=0$, $\vec{v}_\perp=0$, $\delta\gamma=0$ and $t=0$ at $z=0$. The meaning of this writing is that here we consider the evolution of f along z as the result of two combined effects. On the one hand we have a z-dependent shift of the f-distribution as a whole due to the reference motion $\vec{r}_0(z)$, $\vec{v}_{\perp 0}(z)$ and $s(z)$, while on the other hand we have a more generic evolution in z due to self-interactions and external fields. The distribution f is obviously of the form $f(\vec{l},\vec{\eta},\delta\gamma,\tau,z)$. It follows that the Fourier transform of f, $\bar{f}$, can be written as

$$\begin{aligned}\bar{f}(\vec{l},\vec{\eta},\delta\gamma,\omega,z)&=\int_{-\infty}^{\infty}dt\exp[i\omega t]f(\vec{l},\vec{\eta},\delta\gamma,\tau,z)\\&=\exp\left[\frac{i\omega s(z)}{v_0}\right]\int_{-\infty}^{\infty}d\tau\exp[i\omega\tau]f(\vec{l},\vec{\eta},\delta\gamma,\tau,z)\\&\equiv\exp\left[\frac{i\omega s(z)}{v_0}\right]\tilde{f}(\vec{l},\vec{\eta},\delta\gamma,\omega,z)\end{aligned} \tag{34}$$

where the usefulness in the definition of $\widetilde{f}$ is that $\widetilde{f}$ is a slowly function of z on the scale of $\lambda\!\!\!^{-}$. One has therefore

$$\begin{aligned}\bar{\rho}(\vec{r},z,\omega) &= \frac{(-e)N_e}{c}\int d\vec{l}\,d\vec{\eta}\,d(\delta\gamma)\bar{f}(\vec{l},\vec{\eta},\delta\gamma,\omega,z)\delta(\vec{l}+\vec{r}_0(z)-\vec{r})\\ &= \frac{(-e)N_e}{c}\int d\vec{\eta}\,d(\delta\gamma)\widetilde{f}(\vec{r}-\vec{r}_0(z),\vec{\eta},\delta\gamma,\omega,z)\exp\left[\frac{i\omega s(z)}{v_0}\right]\\ &\equiv \widetilde{\rho}(\vec{r}-\vec{r}_0(z),z,\omega)\exp\left[\frac{i\omega s(z)}{v_0}\right]\end{aligned} \tag{35}$$

and

$$\begin{aligned}\vec{\bar{j}}(\vec{r},z,\omega) &= \frac{(-e)N_e}{c}\int d\vec{l}\,d\vec{\eta}\,d(\delta\gamma)(c\vec{\eta}+\vec{v}_\perp(z))\bar{f}(\vec{l},\vec{\eta},\delta\gamma,\omega,z)\\ &\quad\times\delta(\vec{l}+\vec{r}_0(z)-\vec{r})\\ &= \frac{(-e)N_e}{c}\int d\vec{\eta}\,d(\delta\gamma)(c\vec{\eta}+\vec{v}_\perp(z))\widetilde{f}(\vec{r}-\vec{r}_0(z),\vec{\eta},\\ &\quad\delta\gamma,\omega,z)\exp\left[\frac{i\omega s(z)}{v_0}\right]\\ &\equiv \vec{\widetilde{j}}(\vec{r}-\vec{r}_0(z),z,\omega)\exp\left[\frac{i\omega s(z)}{v_0}\right]\end{aligned} \tag{36}$$

where we introduced, together with $\widetilde{f}$ and with the usual field envelope $\vec{\widetilde{E}}=\vec{\bar{E}}\exp[-i\omega z/c]$, also quantities $\widetilde{\rho}=\bar{\rho}\exp[-i\omega s(z)/v_0]$ and $\vec{\widetilde{j}}=\vec{\bar{j}}\exp[-i\omega s(z)/v_0]$. Note that $\widetilde{\rho}=\widetilde{\rho}(\vec{r}-\vec{r}_0(z),z,\omega)$ (the same applies to $\vec{\widetilde{j}}$). One writes the paraxial equation for the field as

$$\begin{aligned}\left(\nabla_\perp^2+\frac{2i\omega}{c}\frac{\partial}{\partial z}\right)\vec{\widetilde{E}} &= 4\pi\exp\left\{i\omega\left(\frac{s(z)}{v_0}-\frac{z}{c}\right)\right\}\\ &\quad\times\left[\frac{i\omega}{c^2}\vec{\widetilde{j}}(\vec{r}-\vec{r}_0(z),z,\omega)-\vec{\nabla}_\perp\widetilde{\rho}(\vec{r}-\vec{r}_0(z),z,\omega)\right]\end{aligned} \tag{37}$$

in analogy with Eq. (9) of Ref. [1] for a single particle. We solve Eq. (37) with the help of the proper Green's function [1]:

$$G(\vec{r}-\vec{r}',z-z') = -\frac{1}{4\pi|z-z'|}\exp\left[i\omega\frac{|\vec{r}-\vec{r}'|^2}{2c|z-z'|}\right]. \tag{38}$$

We therefore obtain

$$\begin{aligned}\vec{\widetilde{E}} &= 4\pi\int_{-\infty}^{z}dz'\int d\vec{r}'\left\{\frac{i\omega}{c^2}\vec{\widetilde{j}}(\vec{r}'-\vec{r}_0(z'),z',\omega)G(\vec{r}-\vec{r}',z-z')\right.\\ &\quad\left.+\widetilde{\rho}(\vec{r}'-\vec{r}_0(z'),z',\omega)\vec{\nabla}'_\perp G(\vec{r}-\vec{r}',z-z')\right\}\\ &\quad\times\exp\left\{i\omega\left(\frac{s(z)}{v_0}-\frac{z}{c}\right)\right\}.\end{aligned} \tag{39}$$

Explicit substitution of Eq. (38) in Eq. (39) finally yields

$$\begin{aligned}\vec{\widetilde{E}}(z,\vec{r}) &= -\frac{i\omega}{c}\int_{-\infty}^{z}dz'\int d\vec{r}'\frac{1}{z-z'}\\ &\quad\times\exp\left\{i\omega\left[\frac{|\vec{r}-\vec{r}'|^2}{2c(z-z')}+\int_0^{z'}\frac{d\bar{z}}{2\gamma_z^2(\bar{z})c}\right]\right\}\\ &\quad\times\left[\frac{\vec{\widetilde{j}}(\vec{r}'-\vec{r}_0(z'),z',\omega)}{c}-\frac{\vec{r}-\vec{r}'}{z-z'}\widetilde{\rho}(\vec{r}'-\vec{r}_0(z'),z',\omega)\right].\end{aligned} \tag{40}$$

Lagrangian and Eulerian approaches are equivalent. In simple cases, e.g. when trajectories of electrons are a simple function like a straight motion and Eq. (29) can be calculated analytically, the Lagrangian method looks more transparent. However, in the most general case, one needs to account for the presence of focusing elements and self-interactions. The evolution of the 6D phase-space becomes complicated and numerical methods should be used. Naturally, the Lagrangian approach can be applied when the evolution of the 6D phase-space is known via simulations. Then, Eq. (29) has to be calculated numerically for each (macro)particle. The Eulerian approach can be more advantageous. Computer codes can calculate charge and current density distribution as a function of z accounting for focusing elements and self-interactions, and the macroscopic method may be more practical, because one integrates Eq. (40) once and for all. One does not need to have any explicit knowledge of the angle distribution, or of the energy spread distribution to calculate the field. Once charge and current density are known, one only needs to (numerically) integrate Maxwell's equations. This is because we are dealing with a macroscopic system, where only macroscopic current and charge density are important. In other words, the behavior of Maxwell's equations is influenced by projections of the 6D phase-space on the real space (ρ and $\vec{j}$), but not by the 6D phase-space itself.

3.2. Near-field coherent edge radiation

Let us consider the usual setup composed by straight section delimited by two bends, and assume, till the end of the section, that there are no focusing elements nor self-interactions along the straight section. By this, we assume that electrons move along the straight line between two bending magnets. We will adopt the Lagrangian approach to characterize coherent ER emission due to overall temporal bunch profile, without considering, for now, microbunching.

An algorithm for describing radiation emission is straightforward. One begins with the expression for the field generated in the far-zone by a single electron occupying a certain position in phase-space at a fixed reference longitudinal position z. Then, one integrates the single-particle expression over the phase-space distribution, thus getting the equivalent of Eq. (33) in the far-zone. Finally, when the far-zone field (averaged over a given electron distribution) is known, the field in the near-zone can be calculated as has been done before, by back-propagating the far-zone expression.

In the case of edge radiation, the far-zone expression for the field of a single particle having phase-space coordinates $(\vec{l},\vec{\eta},\delta\gamma,\tau)$ at $z=0$ is given by

$$\begin{aligned}&\vec{\widetilde{E}}_{(1)}(\vec{l},\vec{\eta},\delta\gamma,\tau;\vec{\theta},z,\omega)\\ &\quad=\frac{i\omega eL}{c^2z}\exp[i\omega\tau]\exp\left[\frac{i\omega\theta^2z}{2c}\right]\exp\left[-\frac{i\omega\vec{\theta}\cdot\vec{l}}{c}\right]\\ &\quad\times(\vec{\theta}-\vec{\eta})\mathrm{sinc}\left\{\frac{\omega L}{4c}\left[|\vec{\theta}-\vec{\eta}|^2+\frac{1}{\gamma^2}-\frac{2\delta\gamma}{\gamma^3}\right]\right\}.\end{aligned} \tag{41}$$

Note that Eq. (41) is a straightforward generalization of Eq. (20) of Ref. [1], obtained by performing a rigid rotation of the reference system and a translation of the observation point *without* changing the observation plane of interest, which remains perpendicular to the z-axis of the initial reference system. This explains why the combination $\vec{\theta}-\vec{\eta}$ does not enter the phase in Eq. (41). This solves the problem for the field in the case when trajectories are straight lines between two bending magnets without focusing elements, and self-interactions are negligible.

The field in the far-zone should be subsequently averaged over f. This is accomplished by substituting Eq. (41) into Eq. (33). Simplifications arise when the phase-space distribution can be separated in product of different factors depending only on offset, deflection, energy spread and arrival time for some choice of the reference position z. Such separability is not always granted. However, the choice of some particular reference point may help simplifying calculations. For example, the distribution of offsets and deflections factorizes when the reference position in z is fixed at the minimal value of the betatron function. In the following we will consider two different study cases of interest.

Case I: $f = f_l(\vec{l})\delta(\vec{\eta})\delta(\delta\gamma/\gamma)f_\tau(\tau)$. This is one of the simplest situations, when both angular distribution and energy distribution can be neglected, typical of well-collimated, monochromatic high-quality beams produced in conventional accelerators. Simpler subcases for $f_l = \delta(\vec{l})$ or $f_\tau = \delta(\tau)$ (or both) can be easily inferred from this more general model.

As we discussed before, the presence of an offset modifies the single-particle field by a phase factor only. In case of ER, Eq. (33) simplifies to

$$\vec{\tilde{E}}(z,\vec{\theta},\omega) = N_e F\left(\omega,\vec{\theta}\right)\tilde{E}_{(1)} = \frac{i\omega e N_e F(\omega,\vec{\theta})L}{c^2 z}\exp\left[\frac{i\omega\theta^2 z}{2c}\right]\vec{\theta}\,\mathrm{sinc}\left\{\frac{\omega L}{4c}\left[\frac{1}{\gamma^2}+\theta^2\right]\right\} \quad (42)$$

where

$$F(\omega,\vec{\theta}) = \int dt f_\tau(\tau)\exp[i\omega\tau]\int d\vec{l} f_l(\vec{l})\exp\left[-\frac{i\omega}{c}\vec{\theta}\cdot\vec{l}\right]. \quad (43)$$

Thus, in this case, we obtain a simple result amounting to a multiplication of the structure factor F defined in Eq. (43) by the single-particle field. The structure factor F is the product of the Fourier transform of f_τ (the bunch longitudinal profile), $\bar{f}_\tau$, and the Fourier transform of the bunch transverse profile.

To sum up, if one knows results for a single electron, like those calculated above for ER, TUR, or any other kind of radiation, and one needs to calculate radiation from an electron bunch, all is needed to do is to multiply the result for a single electron by F; results in the near zone are obtained remembering that $\vec{\theta} = \vec{r}/z$. Note that in the case of a single electron with zero offset and arrival time $\tau_k = 0$, $\bar{f}_\tau = 1$ and $f_l(\vec{l}) = \delta(\vec{l})$, so that $F = 1$ and one recovers Eq. (29).

In the present case I, the form factor F does not change during the motion of electrons along the z-axis. This is in agreement with our previous assumption about energy spread and angular distribution of the bunch. In fact, as said before, we assume that $f_\tau(\tau)$ remains unchanged during the motion along the beamline. Concerning the transverse structure, we are assuming that the transverse size and shape of the bunch do not vary either.

With the help of Eq. (42) we obtain the angular spectral flux

$$\frac{dW}{d\omega\, d\Omega} = \frac{cN_e^2 z^2}{4\pi^2}|\vec{\tilde{E}}|^2 = |F(\omega,\theta)|^2\frac{cN_e^2 z^2}{4\pi^2}|\vec{\tilde{E}}_{(1)}|^2. \quad (44)$$

Note that Eq. (44) is just the second (coherent) term in Eq. (30). We should stress that the near-zone problem for coherent ER can be solved, similarly as in the single-particle case, starting from the far-zone data. Therefore, it can be solved using Eq. (42).

Consider first the case $\phi \ll 1$. The problem of calculation of the virtual source distribution in the middle of the straight section can be basically reduced to a Fourier transform of the far-field distribution. Therefore, the specification of virtual sources also simplifies to a convolution between the single-particle virtual source and a spatial Fourier transform of the form factor F. Using Eqs. (16), (20), (30) of Ref. [1], and Eq. (42) one explicitly obtains

$$\vec{\tilde{E}}(0,\vec{r}) = N_e\bar{f}_\tau(\omega)\vec{\tilde{E}}_{(1)}(0,\vec{r}) * f_l(\vec{r}) = N_e\bar{f}_\tau(\omega)\int d\vec{l}\left[-\frac{4i\omega e}{c^2 L}(\vec{r}-\vec{l})\,\mathrm{sinc}\left(\frac{\omega|\vec{r}-\vec{l}|^2}{cL}\right)\right]f_l(\vec{l}) \quad (45)$$

where $\vec{\tilde{E}}_{(1)}(0,\vec{r})$ indicates the single-particle field distribution at the virtual source in Eq. (30) of Ref. [1], and the symbol "$*$" denotes the convolution product as defined in the second line of Eq. (45). Note that the virtual source in Eq. (45) can be imaged by a lens when the object plane corresponds to position $z = 0$.

Similar remarks hold for the case of a generic value of ϕ. In fact, as is well-known (see Eq. (37) of Ref. [1]), the expression for the single-particle field in the far-zone can be split in the sum of two spherical-wave contributions, and both terms are subsequently multiplied by the same form factor. Thus, analogously to Eq. (45), one obtains

$$\vec{\tilde{E}}(\pm L/2,\vec{r}) = N_e\bar{f}_\tau(\omega)\vec{\tilde{E}}_{(1)}(\pm L/2,\vec{r}) * f_l(\vec{r}) \quad (46)$$

where now $\vec{\tilde{E}}_{(1)}(\pm L/2,\vec{r})$ indicate the single-particle field distribution at the virtual source positions $\pm L/2$ in Eq. (39) of Ref. [1].

Case II: $f = f_{l,\eta}(\vec{l},\vec{\eta})\delta(\delta\gamma/\gamma)f_\tau(\tau)$. In this situation we still neglect the energy-spread distribution, but we account for a given distribution in angles in addition to the case treated in I. In other words, the bunch has a finite emittance. Factorization of f_l and f_η at the reference point ($z = 0$) indicates that the betatron functions are minimal at that position. In practice, angular distribution is important for the case of a laser-plasma accelerator device. In this case, it is more natural to assume that the minimal betatron function is located at $z = -L/2$, rather than at $z = 0$. Then, the product $f_l(\vec{l})f_\eta(\vec{\eta})$ must be consistently substituted by a non-factorized distribution $f_{l,\eta}(\vec{l},\vec{\eta})$. We will consider a Gaussian electron bunch with rms size σ_l. Additionally, we introduce a Gaussian angular distribution with rms σ_η and assume, for simplicity, that these rms quantities apply both in the horizontal and in the vertical plane at $z = -L/2$. As a result, one has the following distribution at $z = 0$ (which may be alternatively rewritten in terms of Twiss parameters):

$$f_{l,\eta}(l,\eta) = \frac{1}{4\pi^2\sigma_l^2\sigma_\eta^2}\exp\left[-\frac{(l-L\eta/2)^2}{\sigma_l^2}-\frac{\eta^2}{\sigma_\eta^2}\right]. \quad (47)$$

With this in mind, Eq. (33) simplifies to

$$\vec{\tilde{E}}(z,\vec{\theta},\omega) = \frac{i\omega e N_e L\bar{f}_\tau(\omega)}{c^2 z}\int d\vec{l}\, d\vec{\eta} f_{l,\eta}(l,\eta)\exp\left[\frac{i\omega\theta^2 z}{2c}\right] \times\exp\left[-\frac{i\omega\vec{\theta}\cdot\vec{l}}{c}\right](\vec{\theta}-\vec{\eta})\mathrm{sinc}\left\{\frac{\omega L}{4c}\left[|\vec{\theta}-\vec{\eta}|^2+\frac{1}{\gamma^2}\right]\right\} \quad (48)$$

Generalization of this study case to the situation with a finite energy spread, still relevant e.g. for laser-plasma accelerator devices can be performed straightforwardly.

3.3. Microbunching

We will now study the particular case of an electron bunch modulated in density at a given wavelength. In this case, coherent emission is not due to the overall bunch profile, but to the presence of a modulation superimposed to such profile.

In some cases modulation of the bunch can be set up on purpose, while in others it can be a detrimental effect.

Typical examples of parasitic microbunching mechanisms at FEL facilities are driven by Coherent Synchrotron Radiation (CSR) in the bending magnet of a bunch compressor chicane [18–20] or Longitudinal Space Charge force (LSC) [21]. Initial shot-noise density modulation at a given frequency induces energy modulation at the same frequency due to CSR or LSC impedances. Such energy modulation is subsequently transformed back into density modulation through a dispersive section, eventually leading to a beam instability. The dispersive section is typically the magnetic compression chicane itself. In this case, microbunching is usually an unwanted phenomenon, which tends to spoil the high-quality electron-beam needed for the FEL process.

However, in other cases, a modulation at optical wavelengths can be printed on purpose onto the electron bunch with the help of a (quantum) laser and a modulator undulator followed by a dispersive section. Optically modulated electron bunches can be used for diagnostic purposes and in pump–probe techniques as well [22,23].

If the bunch is modulated at a given wavelength $\lambdabar_m$, one has $f_\tau(\tau) = f_{\tau 0}(\tau)[1 + a_0 \cos(c\tau/\lambdabar_m)]$, where $f_{\tau 0}$ is a given longitudinal profile and a_0 is the modulation level.

Let us consider a typical Gaussian model for the beam, specified by

$$f_l(\vec{l}) = \frac{1}{2\pi\sigma_l^2}\exp\left[-\frac{l^2}{2\sigma_l^2}\right] \tag{49}$$

σ_l being the *rms* beam transverse dimension and by

$$f_{\tau 0}(\tau) = \frac{1}{\sqrt{2\pi}\sigma_T}\exp\left[-\frac{\tau^2}{2\sigma_T^2}\right]. \tag{50}$$

Here we are assuming that the wavefront of the density distribution of the modulation is perpendicular to the velocity of electrons, and is uniform in the transverse direction as a_0 is not a function of $\vec{r}$. The latter assumption is close to reality, because the waist of the seed laser is much larger than the size of the electron bunch in the modulator undulator, due to the extreme high-quality of the electron bunch in XFELs.

Near the modulation frequency $\omega_m = c/\lambdabar_m$, a bunch with modulated Gaussian temporal profile and rms duration σ_T yields

$$\bar{f}_\tau(\omega) = \frac{a_0}{2}\left\{\exp\left[-\frac{\sigma_T^2}{2}(\omega-\omega_m)^2\right] + \exp\left[-\frac{\sigma_T^2}{2}(\omega+\omega_m)^2\right]\right\} \tag{51}$$

where $\bar{f}_\tau(\omega)$ is, as before, the Fourier transform of the temporal profile of the bunch. In deriving Eq. (51) we used an adiabatic approximation that can be taken advantage of in practical situations involving XFELs, where the optical modulation wavelength is much shorter than the bunch length, i.e. $c\sigma_T/\lambdabar_m \gg 1$. In this case we have another large parameter in the problem, which considerably simplifies the treatment. In fact, since we are interested in coherent emission around optical wavelengths, in calculating Eq. (51) we neglected the Fourier transform of the first term of $f_\tau(\tau)$, i.e. $f_{\tau 0}(\tau)$. Obviously, this would not be possible for frequencies in the range $1/\sigma_T$. From Eq. (51) follows that radiation is exponentially suppressed for frequencies outside the bandwidth $1/\sigma_T$ centered at the modulation frequency ω_m.

The exponential suppression in Eq. (51) has its analogous in the transverse direction too. With the help of Eq. (49) one finds

$$F(\omega,\vec{\theta}) = \bar{f}_\tau(\omega)\exp\left[-\frac{\omega^2\theta^2\sigma_l^2}{2c^2}\right]. \tag{52}$$

Note that θ is usually normalized to a characteristic angle that depends on the system considered. In our ER case, such angle is $\sqrt{\lambdabar/L_f}$, with $L_f = \min[L, \gamma^2\lambdabar]$. With this in mind, the exponential suppression in Eq. (52) can be written in normalized units as

$$F(\omega,\vec{\hat{\theta}}) = \bar{f}_\tau(\omega)\exp\left[-\frac{\hat{\theta}^2 N}{2}\right] \tag{53}$$

where we defined

$$N = \frac{\sigma_l^2}{\lambdabar L_f}. \tag{54}$$

The parameter N is analogous to a Fresnel number in diffraction theory, and is the only (dimensionless) transverse parameter related to the radiation emission in the model defined by Eqs. (49) and (50). When $N \ll 1$ the exponential factor in Eq. (53) returns unity, and one gets back the single-electron radiation profile, whereas the flux is possibly modified by the presence of $\bar{f}_\tau$. When $N \gtrsim 1$ the intensity profile as a function of angles is exponentially suppressed.

Integration of Eq. (44) in $d\omega$ and in $d\Omega$ gives the total energy radiated. Since we are dealing with an electron bunch modulated at optical wavelengths we are interested in narrow-bandwidth emission.

Within the above-mentioned adiabatic approximation we can consider the wavelength in $\vec{\tilde{E}}_{(1)}$ appearing in Eq. (44) fixed, i.e. $\lambdabar = \lambdabar_m$. Then, integration in $d\omega$ can be easily performed using the fact that $\int_0^\infty d\omega|\bar{f}_\tau(\omega)|^2 = \sqrt{\pi}a_0^2/(4\sigma_T)$, leading to

$$\frac{dW}{d\Omega} = \frac{\sqrt{\pi}cz^2N_e^2a_0^2}{16\pi^2\sigma_T}\exp\left[-\frac{\omega_m^2\theta^2\sigma_l^2}{c^2}\right]|\vec{\tilde{E}}_{(1)}|^2. \tag{55}$$

Integration over angles can be performed analytically in particular limiting cases.

In the following we will discuss the usual setup for a straight section delimited by two bends. However, our result can be easily extended to the case of Fig. 1(b) and Fig. 1(c) of Ref. [1]. Let us first consider the case $\phi \ll 1$. One has

$$W = \frac{2N_e^2e^2a_0^2}{\sqrt{\pi}\sigma_T c}\int_0^\infty \frac{d\theta}{\theta}\sin^2\left[\frac{\omega_m L\theta^2}{4c}\right]\exp\left[-\frac{\omega_m^2\theta^2\sigma_l^2}{c^2}\right]. \tag{56}$$

Introducing dimensionless units allows one to write the total number of photons emitted at ω_m as

$$\begin{aligned} N_{ph} &= \frac{2N_e^2\alpha a_0^2}{N_m\sqrt{\pi}}\int_0^\infty \frac{d\hat{\theta}}{\hat{\theta}}\sin^2\left[\frac{\hat{\theta}^2}{4}\right]\exp[-N\hat{\theta}^2] \\ &= \frac{N_e^2\alpha a_0^2}{4N_m\sqrt{\pi}}\ln\left[1+\frac{1}{4N^2}\right] \end{aligned} \tag{57}$$

where $\alpha \equiv e^2/(\hbar c) = \frac{1}{137}$ is the fine structure constant and $N_m = \sigma_T\omega_m$ is the number of modulation wavelengths included in the bunch. It should be noted that Eq. (57) is logarithmically divergent for $N \longrightarrow 0$. It is therefore interesting to discuss the region of applicability of Eq. (57) in the limit for small values of N. Such asymptote can usually be exploited when dealing with XFEL setups, because of the extremely high-quality of the electron bunch (small emittance). The expression used for $\vec{\tilde{E}}_{(1)}$ assumes that the sharp-edge approximation holds, i.e. $\delta \ll 1$. In this case, the formation length of the bending magnet at the end of the straight section L_{fb} is much smaller than the straight section length L. The transverse spot-size of the radiation associated with bending magnet emission, and is of order $\lambdabar L_{fb}$ is then the smallest characteristic transverse size of the problem. If the electron-bunch size becomes of order $\lambdabar L_{fb}$, our electrodynamic description cannot distinguish anymore between a bunch with finite transverse size and a point. In this case one should substitute σ_l with $\lambdabar L_{fb}$. This amounts to the substitution $N \longrightarrow \delta$. Thus in the limit $N \ll \delta$ we prescribe the substitution of N with δ for estimations.

Finally, since $c\sigma_T/\lambdabar_m \gg 1$, it makes sense to introduce an expression for the instantaneous power as a function of the instantaneous (peak) current $I(\tau)$ and modulation $a_0(\tau)$, if the seed laser duration is not too long compared to the bunch duration. To this purpose, we consider a stepped-profile model for the bunch $f_{\tau 0}(\tau) = 1/T$ for $-T/2 < \tau < T/2$ and zero elsewhere. It follows that

$$\bar{f}_\tau(\omega) = a_0\left\{\frac{\sin[T(\omega+\omega_m)/2]}{T(\omega+\omega_m)} + \frac{\sin[T(\omega-\omega_m)/2]}{T(\omega-\omega_m)}\right\}. \tag{58}$$

Then, in the limit for $T \gg \lambdabar_m/c$ one has $\int_0^\infty d\omega|\bar{f}_\tau(\omega)|^2 \simeq a_0^2\pi T/2$, and

$$\frac{dP}{d\Omega} = \frac{1}{T}\frac{dW}{d\Omega} = \frac{ca_0^2I_0^2\pi z^2}{8\pi^2e^2}\exp\left[-\frac{\omega_m^2\theta^2\sigma_l^2}{c^2}\right]|\vec{\tilde{E}}_{(1)}|^2 \tag{59}$$

where $dP/d\Omega$ is the angular distribution of power. If now the current $I = I(\tau)$ and the modulation level $a = a(\tau)$ are slowly

varying functions of time on the scale $\lambda\!\!\!^{-}_m/c$, one obtains for $\phi \ll 1$

$$\frac{dP}{d\Omega} = \frac{\omega_m^2 L^2 a(\tau)^2 I(\tau)^2}{8\pi c^3} \exp\left[-\frac{\omega_m^2 \theta^2 \sigma_l^2}{c^2}\right] \theta^2 \mathrm{sinc}\left[\frac{\omega_m L \theta^2}{4c}\right]. \tag{60}$$

Eq. (60) can be used in order to study the general case of an electron bunch with arbitrary gradient profile and amplitude of modulation.

Let us now turn to the case when $\phi \gg 1$ for the single-edge radiation ($\gamma^2 \lambda\!\!\!^{-} \ll d_2 \ll L$ and $r \ll L/\gamma$). Introducing apodization of the detector on a characteristic angular scale σ_a and using Eq. (42) of Ref. [1] we obtain[3]

$$W = \frac{N_e^2 e^2 a_0^2}{2\sqrt{\pi}\sigma_T c} \int_0^\infty d\xi \frac{\gamma^4 \xi^3}{(\gamma^2 \xi^2 + 1)^2} \exp\left[-\frac{\omega_m^2 \xi^2 \sigma_l^2}{c^2} - \frac{\xi^2}{2\sigma_a^2}\right]. \tag{61}$$

Note that apodization (through σ_a) and transverse bunch length (through $\lambda\!\!\!^{-}_m/\sigma_l$) play the same role from a mathematical viewpoint. Also note that, in order to use Eq. (42) of Ref. [1], we must require that we are within its limits of applicability, i.e. $d_2 \cdot \min(\sigma_a, \lambda\!\!\!^{-}_m/\sigma_l) \ll L/\gamma$ (always with $\gamma^2 \lambda\!\!\!^{-}_m \ll d_2 \ll L$).

Taking advantage of dimensionless units one can write the total number of photons emitted at ω_m as

$$\begin{aligned} N_{ph} &= \frac{N_e^2 \alpha a_0^2}{2N_m\sqrt{\pi}} \int_0^\infty d\hat{\xi} \frac{\hat{\xi}^3}{(\hat{\xi}^2 + \phi)^2} \exp[-(N+A)\hat{\xi}^2] \\ &= \frac{N_e^2 \alpha a_0^2}{4N_m\sqrt{\pi}} \{-1 + [1 + (A+N)\phi]\Gamma[0, (A+N)\phi] \\ &\quad \times \exp[(A+N)\phi]\} \end{aligned} \tag{62}$$

where $A \equiv \lambda\!\!\!^{-}/(2L\sigma_a^2)$ is analogous to the N parameter in Eq. (54) and accounts for apodization effects, and $\Gamma(a,z) = \int_z^\infty t^{a-1} \exp(-t)\,dt$ is the incomplete gamma function. Discussion of asymptotic cases for different values of N and A is possible on the basis of Eq. (62).

4. Extraction of edge radiation by a mirror

4.1. Backward transition and diffraction radiation

A setup where edge radiation from an upstream bending magnet is extracted by a mirror is shown in Fig. 8. In the particular case depicted in that figure, radiation is reflected by a hole mirror and sent to a far-infrared spectrometer. This example refers to a method [24] where coherent radiation is used to monitor the bunch length at XFEL setup, but similar setups can also be used to collect incoherent radiation in the optical range. The size and shape of the mirror may vary. A hole may be present in the mirror or not, and the geometry of the experimental arrangement depends on the particular setup considered. Anyway, in its basic lines, a standard edge-radiation diagnostic setup consists, similarly as in Fig. 8, of a mirror positioned at some distance after a bend and rotated by an angle $\pi/4$ in the direction of the electron bunch to allow extraction of radiation through a vacuum window. Such setup can be used for longitudinal bunch-length measurements in the millimeter and sub-millimeter range as well as for transverse electron-bunch diagnostics in the optical wavelength range [24–26].

Consider the straight section after the bend. If this is long enough so that $\phi \gg 1$ (and $\delta \cdot \phi \ll 1$, i.e. $\lambda\!\!\!^{-} \gg \lambda\!\!\!^{-}_c$), radiation collected by the mirror is the usual transition radiation first noted by

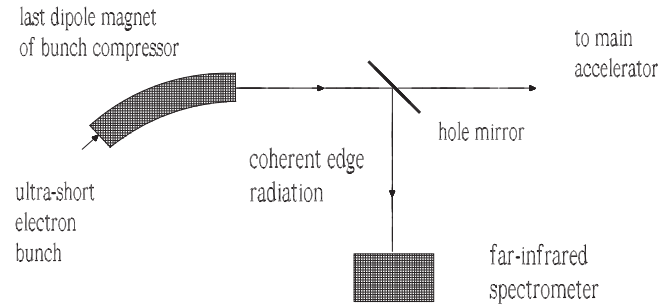

Fig. 8. Electron-bunch length monitor for XFEL using far-infrared coherent edge radiation.

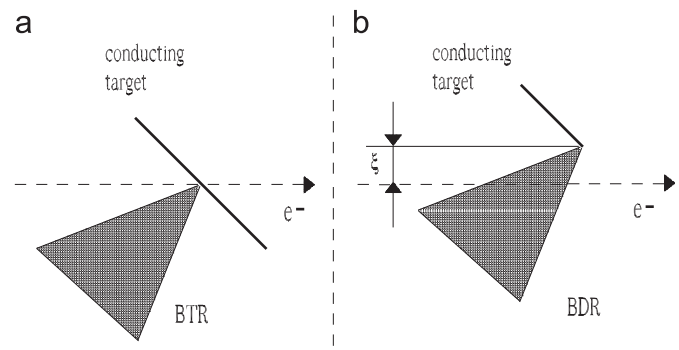

Fig. 9. Geometry of backward transition radiation (BTR) (a), backward diffraction radiation (BDR) (b).

Ginzburg and Frank [27] and considered in a number of publications written during the last half century. In recent years there has been a good deal of interest in TR, because this form of radiation has found useful applications, e.g. in diagnostic for ultrarelativistic beams [28–32]. These papers describe an electron crossing an interface between two media with different dielectric constants and they refer, in particular, to the case of the boundary between vacuum and an ideal conductor. As a consequence of the crossing, time-varying currents are induced at the boundary. These currents are responsible for TR (see Fig. 9 left). The metallic mirror, that is treated as the source of TR, is usually modelled with the help of a physical optics approach. This is a well-known high-frequency approximation technique, often used in the analysis of electromagnetic waves scattered from large metallic objects. Surface current entering as the source term in the propagation equations of the scattered field are calculated by assuming that the magnetic field induced on the surface of the object can be characterized using geometrical optics, i.e. assuming that the surface is locally replaced, at each point, by its tangent plane.

As mentioned before, one typically assumes that the Ginzburg–Frank formula can be used, i.e. the field distribution is proportional to $K_1[\omega r/(\gamma c)]$. In terms of parameters introduced in this paper, this approximation has sense only when $\phi \gg 1$. However, even for this case, one should always specify the transverse region of applicability of the usual TR formulas, which is typically neglected (as we will see, this region is for $r \ll \phi \lambda\!\!\!^{-} \gamma = L/\gamma$, with $\phi \gg 1$). Moreover, mainly due to an increased electron energy, today setups often meet, in practice, condition $\phi \lesssim 1$ even in the optical wavelength range. In this case one should account for the whole setup when discussing the reflected radiation, and not only for the metallic mirror. In other words, as we will see, the problem of extraction of edge radiation reduces to the well-studied TR problem only asymptotically, i.e. for $\phi \gg 1$. In this paper we will still keep on talking about TR or, with some

[3] In particular, Eq. (61) applies to the case when coherent TR due to microbunching is outcoupled by a mirror and postmirror optics can be modelled with a Gaussian pupil profile. In this case, $z - L/2$ indicates the distance from the mirror.

abuse of language, even when usual TR formulas do not apply anymore ($\phi \lesssim 1$, or $r \gtrsim L/\gamma$).

When dealing with the above-discussed setup, one usually talks about Backward Transition Radiation (BTR). BTR is widely used for different purposes, because it allows for low background radiation levels. We will consider a whole range of setups for BTR, without treating their geometry in detail, and we will give an algorithm to deal with these systems in all generality. In fact, in all cases, the main problem is in the specification of the electric field distribution at some position where a mirror is present (the hole mirror in the example of Fig. 8). The only element to be accounted for, aside for the mirror itself, is an upstream dipole magnet. Note that the mirror is tilted as in Fig. 8, i.e. it is not perpendicular with respect to the optical axis. In principle, one may account for this tilting, but in practice the projection of the mirror on the optical axis is negligible compared with the distance to the dipole, and one may consider the screen as not tilted.

Note that Diffraction Radiation (DR) appears when charged particles move in the vicinity of a medium (e.g. a conductive mirror) at some given impact parameter ξ, and has been recently suggested as a possible tool for non-invasive bunch diagnostics. DR is obviously related to TR and, in particular, it can be treated starting from the knowledge of the electric field distribution at the mirror, and subsequently applying physical optics techniques. BDR in the optical wavelength range has been measured and applied for transverse electron-beam diagnostics (see e.g. Refs. [25,26]). A schematic comparison between a BDR and a BTR emission is shown in Fig. 9.

It should be stressed that specification of the field at the target position must be considered as the first step to the solution of a more complicated problem, i.e. the characterization of the field at a detector position. Such first step is considered separately, because the field at the target plane is independent of the type of target and detector. Once the field at the target position is known, the full problem can be solved with the help of physical optics techniques, where one should account for diffraction effects due to the particular shape of the mirror.

In the following we will focus on the problem of field characterization at the target position. A virtual source method can be applied. Our algorithm consists of the following steps: (i) propagate the field from the upstream virtual source to the mirror, (ii) add the field from the downstream virtual source.

Note that, in contrast to the study case of a straight section between two bends considered before, numerical methods involving direct integration of Maxwell's equations (e.g. with the help of SRW) down the optical axis up to the mirror will fail, because electromagnetic sources must be propagated up to the observation plane, and integration of Green's function up to that position yields a singularity (independently of the value of δ). In our virtual source approach we also deal with a singularity, but this is isolated in a single term, and expressed by means of an analytical function (the Bessel K_1 function in Eq. (39) of Ref. [1], allowing straightforward presentation of results. The same approach has been proposed in Ref. [33] to discuss the setup in Fig. 8.

Let us focus in detail on our generic BTR setup. Following the algorithm described above, we model the system with the help of two virtual sources at $z = \pm L/2$, i.e. at the end of the bend and at the mirror. As said before, Eq. (39) of Refs. [1] can be used to describe the virtual sources. Application of the propagation formula (Eq. (14) in Ref. [1]) allows to calculate the field at any distance z in free-space for the source located at $z = -L/2$. In order to simplify the presentation of the electric field we take advantage of polar coordinates. We propagate the upstream virtual source (located at $z = -L/2$) up to the mirror position at $z = L/2$, and we add the field distribution for the downstream source at $z = L/2$.

At $z = L/2$ (i.e. at the mirror position) we obtain

$$\vec{\tilde{E}}\left(\frac{L}{2},\vec{r}\right) = -\frac{2\omega e}{c^2\gamma}\exp\left[\frac{i\omega L}{4c\gamma^2}\right]\frac{\vec{r}}{r}K_1\left(\frac{\omega r}{c\gamma}\right) - \frac{2\omega e}{c^2\gamma}\frac{\vec{r}}{r}\exp\left[-\frac{i\omega L}{4c\gamma^2}\right] \times \exp\left[\frac{i\omega r^2}{2cL}\right]\frac{\omega}{cL}\int_0^\infty dr' r' K_1\left(\frac{\omega r'}{c\gamma}\right)J_1\left(\frac{\omega r r'}{cL}\right)\exp\left[\frac{i\omega r'^2}{2cL}\right] \tag{63}$$

which is valid for any value of ϕ. Exactly as in the case treated in Section 5 of Ref. [1], one may deal with two asymptotes of the theory for $\phi \gg 1$ and $\phi \ll 1$.

In the case $\phi \gg 1$ the contribution from the upstream source in Eq. (63) can be calculated analytically. In fact, the K_1 function under the integral sign is responsible for an exponential suppression of the integrand in the limit for $r' \gg \gamma\lambda\!\!\!^{-}$. As a result, we can integrate up to values $r' \lesssim \gamma\lambda\!\!\!^{-}$ without changing the integration result. This means that the phase factor in the integrand will be at most of order $1/\phi \ll 1$, and can be neglected. The result of the integration then corresponds to the expression for a single edge in the far-zone, Eq. (41) of Ref. [1], the only difference being that the single-edge source is located at $z = -L/2$. Altogether, for $\phi \gg 1$, Eq. (63) simplifies to:

$$\vec{\tilde{E}}\left(\frac{L}{2},\vec{r}\right) = -\frac{2\omega e}{c^2\gamma}\exp\left[\frac{i\omega L}{4c\gamma^2}\right]\frac{\vec{r}}{r}K_1\left(\frac{\omega r}{c\gamma}\right) - \frac{2e}{c}\frac{\gamma^2\vec{r}}{(\gamma^2 r^2 + L^2)}\exp\left[-\frac{i\omega L}{4c\gamma^2}\right]\exp\left[\frac{i\omega r^2}{2cL}\right]. \tag{64}$$

Eq. (64) is valid for $r \ll L\sqrt[3]{\lambda\!\!\!^{-}/R}$, i.e. for angles (measured from the upstream edge at $z = -L/2$) smaller than the angle of SR from the bend. When $r \ll \gamma\lambda\!\!\!^{-}$, the K_1 term is obviously dominant with respect to the second (polynomial) term in r. When $r \gtrsim \gamma\lambda\!\!\!^{-}$, the K_1 term drops exponentially, while the second term is zero at $r = 0$, grows polynomially and reaches its maximum at $r \sim L/\gamma$. Since the polynomial growth is slower than the exponential decrease of the K_1 term, one will have a region $\gamma\lambda\!\!\!^{-} \lesssim r \ll L/\gamma$ where the field is strongly suppressed with respect to the maximum at $r \sim L/\gamma$. In this region, the K_1 term is still a good approximation to the total field. As a result, the first term in Eq. (64) can be taken as a good approximation for the total field when $r \ll L/\gamma$ (always assuming $\phi \gg 1$). In this asymptotic case, results from our analysis coincide with usual results from TR theory. Note that the question about how many photons will be collected strongly depends on the acceptance of the optical system. The first term in Eq. (64) is singular at $r = 0$, so that the larger the acceptance, the nearest to the singularity we collect photons, and the largest the number of photons is.

The opposite asymptote for $\phi \ll 1$ can be described by applying the propagation formula, Eq. (14), to Eq. (30) of Ref. [1], like it was done for Eq. (32) of the same reference. When z is fixed at the mirror position, i.e. at $z = L/2$ one obtains [34]

$$\vec{\tilde{E}}\left(\frac{L}{2},\vec{r}\right) = -\frac{2e}{c}\frac{\vec{r}}{r^2}\exp\left[\frac{i\omega r^2}{2cL}\right]. \tag{65}$$

The quadratic phase factor in Eq. (65) describes a spherical wavefront centered on the optical axis at the upstream edge (the initial bend). Note that this contribution scales as $1/r$ and is singular on-axis. The screen positioned at the downstream end of the setup will detect electric field given by the spherical wavefront in Eq. (65) at any value $\sqrt[3]{\lambda\!\!\!^{-}R^2} \ll L \ll \gamma^2\lambda\!\!\!^{-}$ from the upstream magnet and $r \ll L\sqrt[3]{\lambda\!\!\!^{-}/R}$.

Following the specification of the field (in amplitude and phase) at the target position, one faces the problem of propagation of BTR in free-space and through optical elements, which has been extensively discussed in Refs. [28–32]. As mentioned above, this reduces to a standard physical optics problem, which is

interesting within the field of optical engineering, i.e. from the viewpoint of the design of post-mirror collector optics. In these references, discussions are based on the assumption that a field distribution $K_1[\omega r/(\gamma c)]$, i.e. the Ginzburg–Frank formula, can be used. In this case, we deal with a laser-like beam, whose waist is located on the target (i.e. the target exhibits a plane wavefront). The transverse size of the waist is of order $\gamma\lambda\!\!\!^{-} \gg \lambda\!\!\!^{-}$, so that Fourier optics can be applied to solve the propagation problem. The Rayleigh length of this laser-like beam is about $R_L \simeq \gamma^2\lambda\!\!\!^{-}$, and the Fresnel diffraction-zone is located at distances from the mirror of order R_L. When the distance from the mirror becomes much larger than R_L one has the Fraunhoffer diffraction-zone. If some linear optical element is located at a given position after the mirror, one can use available wavefront propagation/physical optics codes (e.g. SRW [2], ZEMAX [35], GLAD [36], PHASE [37]) for calculations. In other words, the propagation problem is well-defined, and does not include any novel aspect from a scientific viewpoint. Only, one needs to put attention to special terminology and notations used in literature, which may lead to some misunderstanding. For example, the Rayleigh length $R_L \sim \gamma^2\lambda\!\!\!^{-}$ is named "the formation length". Since the waist is always given by $w_0 \simeq \sqrt{L_f\lambda\!\!\!^{-}}$, it follows that $R_L \sim w_0^2/\lambda\!\!\!^{-} = L_f$. However, it should be noted that, conceptually, the formation length can only be discussed in connection with the particle trajectories, and not in free-space. Similarly, the Fresnel diffraction-zone is usually named as the "pre-wave zone", while the Fraunhoffer diffraction-zone is called "wave-zone". From this viewpoint, articles dealing with pre-wave-zone effects actually treat a routine optical engineering problem.

It should be remarked that, mathematical analogies aside, the problem of specifying the field at a mirror position is fundamentally different from what we have done in Ref. [1], where we considered a system composed by a straight section between two magnets, and radiation was detected downstream of the last magnet. That setup could be treated entirely within a SR-theory approach, and computer codes like SRW could be used to cross-check our results. Here the situation is different. In fact, Eq. (11) of Ref. [1] must now include integration up to a position z where sources are present

$$\vec{\tilde{E}} = \frac{4\pi e}{c}\int_{-L/2}^{L/2} dz'[\vec{\nabla}'_{\perp}G(\vec{r}-\vec{r}',z-z')]_{\vec{r}'=\vec{r}_0(z')} \times \exp\left[i\omega\left(\frac{s(z)}{v}-\frac{z}{c}\right)\right] \tag{66}$$

with $z = L/2$, and therefore includes a singularity. In analogy with Eq. (18) one then obtains Eq. (63), where the singularity is isolated in the first field-term, which is entangled with sources, whereas the second term is disentangled.

Note that in the mathematical limit for $\rho \longrightarrow \infty$, Eq. (18) reduces to Eq. (63). Similarly, Eq. (40) of Ref. [1] reduces to Eq. (63) at $z = L/2$. However, although formally similar, Eq. (18) and Eq. (40) of Ref. [1] have different physical meaning compared to Eq. (63). In this section we are characterizing the field *along the straight section*. This gives a different status e.g. to the singularity in Eq. (63) for $r = 0$ and $z = L/2$ compared to the singularity in Eq. (40) of Ref. [1], also located at $r = 0$ and $z = L/2$. In fact, the singularity in Eq. (40) of Ref. [1] (which reduces to Eq. (32) of Ref. [1] in the case $\phi \ll 1$) is related with the sharp-edge approximation: δ has a finite value, and going beyond the accuracy of the sharp-edge approximation (i.e. modelling the edges and accounting for their contribution to the radiation) the integrated flux will not diverge, nor the reconstructed field from the far-zone data will. In contrast to this, the singularity in the K_1 term in Eq. (63) at $r = 0$ and $z = L/2$ is due to the fact that the plane at $\hat{z} = L/2$ intercepts the electron trajectory at that point, and is fundamentally related with our model of the electron-beam as a filament without transverse dimensions.

4.2. Impact on setups at XFEL facilities

During the last decade, the electron-beam energy in linac-based facilities increased up to around 10 GeV and novel effects, which were considered negligibly small at lower energies, became important. In fact, at high energies, condition $L \gg \gamma^2\lambda\!\!\!^{-}$ becomes unpractical even for optical wavelengths, and the effect of the presence of an upstream bending magnet on TR emissions must be considered. Moreover, when measuring the long-wavelength coherent BTR, i.e. when the radiation wavelength is comparable to, or longer than the electron-bunch length, the influence of the upstream bending magnet could be significant even at lower energies. These facts led to several misconceptions that can be found till recently.

An example of application for diagnostic purposes in XFEL setups is given in Ref. [24]. In general, monitoring methods based on coherent radiation take advantage of the sensitivity of the coherent spectrum on the bunch form factor, which is related to the bunch length. Coherent radiation from a given setup is thus collected with the help of mirrors and its energy measured, for example with the help of pyroelectric detectors. In order to analyze results, one has to characterize the field distribution at the collecting mirror position.

The setup proposed in Ref. [24] uses the last bend in each magnetic compression chicane of LCLS as depicted in Fig. 10. Radiation is collected by a mirror with a hole (that has to be large enough to let the electron-beam through) and imaged to the diagnostic station. The hole mirror is positioned after a short straight section, a few tens of centimeters long. Detailed parameters can be found in Ref. [24]. In the case of the BC1 chicane, for example, the length of the straight section between magnet and mirror is $L = 0.16$ m, the wavelength of interest is of order[4] $\lambda \sim 1$ m, the electron energy is about 250 MeV, and the radius of the bend is about $R \simeq 2.2$ m.

In Ref. [24] one can read: "the critical wavelength of the synchrotron radiation is orders of magnitude smaller than the wavelength range considered here for the bunch length monitor and the synchrotron radiation can be neglected compared to edge radiation". Authors of Ref. [24] stress the fact that $\lambda\!\!\!^{-} \gg \lambda\!\!\!^{-}_c$. Such condition is absolutely necessary to satisfy the applicability of ER theory. However, as we have seen, it is not sufficient, as the extra-requirement $\delta \ll 1$ must be satisfied too. If we calculate the parameter $\delta = \sqrt[3]{R^2\lambda\!\!\!^{-}}/L$ for numbers given above we obtain $\delta \simeq 0.6$. We conclude that synchrotron radiation from the bend cannot be neglected: on the contrary, its effect will be as important as those from the straight section. The sharp-edge approximation fails here.

Note that there are two contributions to the field at the mirror position. The first is the contribution due to bending magnet radiation, while the second is the contribution due to the straight section. The fact that $\delta \simeq 0.6$ indicates that both contributions are of the same order of magnitude. It follows that it is incorrect to neglect the bending magnet contribution. Assuming that calculation of the straight-section contribution is performed correctly, this would lead to a quantitatively incorrect numerical result from the viewpoint of practical applications. However, authors of Ref. [24] calculate the straight-section contribution incorrectly

[4] Since we are talking about coherent radiation, the reduced characteristic wavelength $\lambda\!\!\!^{-}$ is related here with the longitudinal size of the bunch σ_{rms}, i.e. $\lambda\!\!\!^{-} \simeq \sigma_{rms}$.

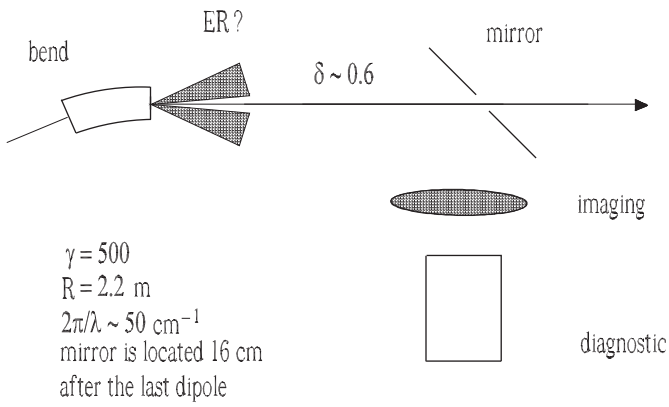

Fig. 10. Layout of the LCLS bunch length monitor, located immediately after the last dipole of the first magnetic bunch compressor.

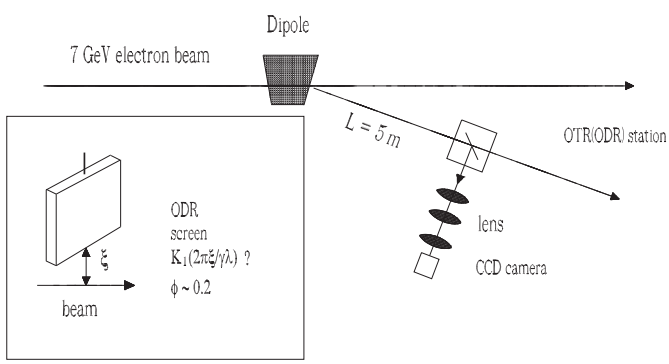

Fig. 11. ODR setup at the APS facility. In this experiment, ODR at visible wavelength is emitted for impact parameter ξ between 1 and 2 mm, values close to the Lorentz factor γ times the reduced observation wavelength.

as well. Let us consider the ϕ parameter. The reader may check that in this case the formation length $\gamma^2\lambda\!\!\!^{-} \simeq 50\,\mathrm{m}$ is much longer than the length of the straight section $L = 0.16\,\mathrm{m}$, so that $\phi \ll 1$. Therefore, Eq. (65) should be used to calculate the straight-section contribution at the mirror position. Authors of Ref. [24] proceed instead in the following way. First, they recognize that for ER "the Coulomb field is the radiation source due to the sudden change in acceleration". Second, they propagate a K_1 source from the edge of the magnet up to the mirror "by expressing the Coulomb field as a sum of Gauss–Laguerre modes". This corresponds to the second term of Eq. (63). In other words, the field distribution at the mirror position is obtained by propagating a K_1 source located at the upstream bending magnet. It follows that the result in Ref. [24] is qualitatively incorrect.

To sum up, in Ref. [24], SR from the bending magnet is incorrectly neglected, and in the calculation of ER the downstream source, the first term of Eq. (63), is missed, qualitatively changing the result. The correct procedure to find the field distribution at the mirror for this parameter values ($\delta \sim 1$, $\phi \ll 1$) is to use Eq. (65) to calculate the straight-section contribution at the mirror position, and to sum up the SR contribution from the bending magnet.

We now turn to analyze [25,26], where a setup similar to that in Fig. 11 is studied from an experimental viewpoint. An electron bunch travels a straight section of length $L \simeq 5\,\mathrm{m}$ downstream of a bending magnet before intercepting an offset mirror at the ODR station. The wavelength considered here is $\lambda \simeq 800\,\mathrm{nm}$, and the electron energy is 7 GeV. In this case $\gamma^2\lambda\!\!\!^{-} \simeq 30\,\mathrm{m}$, i.e. $\phi \simeq 0.17$. Authors of Ref. [25,26] use a downstream virtual source $\sim K_1[\xi/(\gamma\lambda\!\!\!^{-})]$ to characterize the field at the BDR screen, effectively describing an ER setup by means of usual Ginzburg–Frank expression [27] for TR. However, here $\delta \ll 1$ and $\phi \ll 1$. As we have seen before, in this parameter range the correct procedure to evaluate the field distribution at the mirror is to use Eq. (65), which is different from the Ginzburg–Frank expression. In other words, in this parameter range, the Ginzburg–Frank formula cannot be applied anymore.

Note that in Ref. [25] is reported that "the ODR peak signal intensity dependence is consistent with $\exp[-2d/(\gamma\lambda\!\!\!^{-})]$, where d is the distance from beam center to the screen edge, γ is the Lorentz factor". However, in this region of parameters the asymptotic behavior in Eq. (65), does not exhibit any exponential cutoff, nor dependence on $\gamma\lambda\!\!\!^{-}$. Therefore, the interpretation of experimental result in Ref. [25] cannot be accepted.

This example and that in Ref. [24] help to understand the importance of edge-radiation theory in relation with future XFEL facilities. They also demonstrate the usefulness of similarity techniques in the efficient planning of experiments.

5. Conclusions

In this article we applied a previously developed technique [1] to treat radiation field associated with any edge radiation setup in terms of laser-like beams.

In Section 2 we presented the first exhaustive theory of ER within a waveguide. The analysis of the problem was performed by introducing a tensor Green's function technique. This complicates the mathematical structure of equations that depends, contrarily to the unbounded-space case, on the waveguide geometry. We outlined a solution for a homogeneous waveguide with arbitrary cross-section, further specializing it to the case of a circular waveguide. The electric field was found as a superposition of waveguide modes, and was studied for different values of parameters. The main parameter involved in the problem (other than ϕ, δ and $\hat{z}$) was found to be a waveguide parameter Ω, related with the strength of guiding effects. This can be interpreted (at $\phi \ll 1$) as the ratio between the waveguide radius and the radiation diffraction size, and is a purely geometrical parameter.

In Section 3 we presented considerations on the coherent emission of ER. The availability of a large number of photons constitutes an important advantage of coherent ER compared to the incoherent case when this type of radiation is used as a diagnostic tool, where characteristics of the electron bunch can be measured, and electron-beam microbunching can be investigated too.

Finally, in Section 4 we discussed the problem of extraction of ER by a mirror, stressing differences and analogies that this kind of setup presents, compared to those discussed in the previous sections. Particular attention was given to diagnostics setups for XFEL facilities.

As a final remark, it should be noted that there are situations concerning ER setups, when existing computer codes cannot be applied, e.g. the case of a waveguide (Section 2) and the characterization of the field distribution at a mirror position (Section 4), where part of the field is entangled with the sources. In this case, analytical results can be used for practical calculations.

Acknowledgments

We thank our DESY colleagues Martin Dohlus, Michael Gensch and Petr Ilinski for many useful discussions, Massimo Altarelli , Reinhard Brinkmann and Edgar Weckert for their interest in this work.

Appendix A. Equivalence of Eqs. (18) and (12)

We want to show that Eq. (18), together with Eq. (15), is equivalent to Eq. (12). We can demonstrate this fact by calculating the sum in Eq. (12), and presenting it in terms of an integration.

We begin expanding the $\mathrm{sinc}(X)=\sin(X)/X$ function in terms of exponential functions. Moreover, we subtract from X in the denominator of $\sin(X)/X$ an infinitesimally small quantity $i\varepsilon$, where $\varepsilon>0$, to be dropped at the end of calculations. In other words, we substitute $1/X$ with $1/(X-i\varepsilon)=i\int_0^\infty d\xi\exp[-iX\xi-\varepsilon\xi]$. We therefore obtain

$$\vec{\tilde{E}}=-\frac{ieL}{\omega\rho^3}\int_0^\infty d\xi\exp\left[-i\frac{\omega L\xi}{4c\gamma^2}-\varepsilon\xi\right]\sum_{k=1}^\infty\frac{v_{0k}}{J_1^2(v_{0k})}\times\left\{\exp\left[\frac{i\omega L}{4c\gamma^2}\right]-\exp\left[-\frac{i\omega L}{4c\gamma^2}-\frac{iLv_{0k}^2c}{2\omega\rho^2}\right]\right\}\times J_1\left(\frac{v_{0k}r}{\rho}\right)\exp\left[-i\frac{v_{0k}^2cL\xi}{4\omega\rho^2}\right]\vec{e}_r. \tag{67}$$

Eq. (67) consists of two field terms, corresponding to the two terms inside the {...} parenthesis. Let us consider the first term and demonstrate that such term is in fact a generalization of the virtual source at $z=L/2$ (i.e. Eq. (39) of Ref. [1]) for $z_s=L/2$) accounting for the presence of the waveguide. Using the fact that $J_1(X)=I_0'(iX)/i$, the "′" symbol indicating derivative with respect to the argument, and remembering the Wronskian relation $1/X=I_0(X)K_1(X)+I_1(X)K_0(X)$, we have

$$\frac{1}{J_1(v_{0k})}=\frac{2\omega\rho^2}{cL}[I_1(iv_{0k})K_0(iv_{0k})]\left[\frac{d}{d\eta}I_0\left(\sqrt{-i\frac{4\omega\rho^2\eta}{cL}}\right)\right]^{-1}_{\eta=-icLv_{0k}^2/(4\omega\rho^2)} \tag{68}$$

Using Eq. (68) and remembering $J_1(X)=I_1(iX)/i$ we write the first term in Eq. (67) as

$$\vec{\tilde{E}}_1=-i\frac{eL}{\omega\rho^3}\int_0^\infty d\xi\exp\left[-i\frac{\omega L\xi}{4c\gamma^2}-\varepsilon\xi\right]\times\sum_{k=1}^\infty\left[\frac{d}{d\eta}I_0\left(\sqrt{-i\frac{4\omega\rho^2\eta}{cL}}\right)\right]^{-1}_{\eta=-icLv_{0k}^2/(4\omega\rho^2)}\frac{2\omega\rho^2v_{0k}}{cL}K_0(iv_{0k})\times\exp\left[\frac{i\omega L}{4\gamma^2c}\right]I_1\left(i\frac{v_{0k}r}{\rho}\right)\exp\left[-i\frac{v_{0k}^2cL\xi}{4\omega\rho^2}\right]\vec{e}_r. \tag{69}$$

We now consider the integral

$$u=\int_{O_1}d\eta\exp[\eta\xi]\frac{\sqrt{-i\eta}}{I_0\left(\sqrt{-i\frac{4\omega\rho^2\eta}{cL}}\right)}\times\left[I_1\left(\sqrt{-i\frac{4\omega\rho^2\eta}{cL}}\frac{r}{\rho}\right)K_0\left(\sqrt{-i\frac{4\omega\rho^2\eta}{cL}}\right)+I_0\left(\sqrt{-i\frac{4\omega\rho^2\eta}{cL}}\right)K_1\left(\sqrt{-i\frac{4\omega\rho^2\eta}{cL}}\frac{r}{\rho}\right)\right] \tag{70}$$

where O_1 is an integration path on the complex η plane going from $\gamma'-i\infty$ to $\gamma'+i\infty$, $\gamma'>0$ being a positive number larger than the real part of all singularities of the integrand, and closed by a semicircle of infinite radius in the left half plane. It can be shown that the integrand is a single-valued function of η. It follows that u can be calculated as a sum of residues of first order poles located at $\eta=\eta_k=-i\tilde{\lambda}Lv_{0k}^2/(4\rho^2)$. We obtain

$$-\frac{2\rho^3\omega^{3/2}}{\pi(cL)^{3/2}}u=\sum_{k=1}^\infty\frac{2\omega\rho^2v_{0k}}{cL}K_0(iv_{0k})\exp\left[-i\frac{v_{0k}^2cL\xi}{4\omega\rho^2}\right]I_1\left(i\frac{v_{0k}r}{\rho}\right)\times\left[\frac{d}{d\eta}I_0\left(\sqrt{-i\frac{4\omega\rho^2\eta}{cL}}\right)\right]^{-1}_{\eta=-icLv_{0k}^2/(4\omega\rho^2)} \tag{71}$$

that can be immediately substituted in Eq. (69). The integral along the semicircle in Eq. (70) can be dropped using Jordan's lemma. Therefore

$$\vec{\tilde{E}}_1=\frac{2ie\sqrt{\omega}}{\pi\sqrt{Lc}}\exp\left[\frac{i\omega L}{4\gamma^2c}\right]\int_0^\infty d\xi\exp\left[-i\frac{\omega L\xi}{4c\gamma^2}-\varepsilon\xi\right]\times\int_{\gamma'-i\infty}^{\gamma'+i\infty}d\eta\exp[\eta\xi]\times\frac{\sqrt{-i\eta}}{I_0\left(\sqrt{-i\frac{4\omega\rho^2\eta}{cL}}\right)}\left[I_1\left(\sqrt{-i\frac{4\omega\rho^2\eta}{cL}}\frac{r}{\rho}\right)K_0\left(\sqrt{-i\frac{4\omega\rho^2\eta}{cL}}\right)+I_0\left(\sqrt{-i\frac{4\omega\rho^2\eta}{cL}}\right)K_1\left(\sqrt{-i\frac{4\omega\rho^2\eta}{cL}}\frac{r}{\rho}\right)\right]\vec{e}_r. \tag{72}$$

Eq. (72) is easily seen to be the Laplace transform of an inverse Laplace transform. Letting $\varepsilon\longrightarrow 0$, it follows straightforwardly that

$$\vec{\tilde{E}}_1=-\frac{2\omega e}{c^2\gamma}\exp\left[\frac{i\omega L}{4\gamma^2c}\right]\left[K_1\left(\frac{\omega r}{c\gamma}\right)+\frac{K_0\left(\frac{\omega\rho}{c\gamma}\right)}{I_0\left(\frac{\omega\rho}{c\gamma}\right)}I_1\left(\frac{\omega r}{c\gamma}\right)\right]\vec{e}_r. \tag{73}$$

Eq. (73) is a generalization for the virtual source located at $z=L/2$ that accounts for the presence of a waveguide (compare with Eq. (15)).

Let us now consider the second term in Eq. (67), which can also be written as

$$\vec{\tilde{E}}_2=\frac{eL}{\omega\rho^3}\sum_{k=1}^\infty\frac{v_{0k}}{J_1^2(v_{0k})}\exp\left[-\frac{i\omega L}{4c\gamma^2}-\frac{iLv_{0k}^2c}{2\omega\rho^2}\right]\times\frac{1}{\frac{\omega L}{4c\gamma^2}+\frac{Lv_{0k}^2c}{4\omega\rho^2}}J_1\left(\frac{v_{0k}r}{\rho}\right)\vec{e}_r. \tag{74}$$

Since

$$\int_0^\rho dr'r'K_1\left(\frac{\omega r'}{c\gamma}\right)J_1\left(\frac{v_{0k}r'}{\rho}\right)=\left[\frac{c\gamma v_{0k}}{\omega\rho}+v_{0k}J_2(v_{0k})K_1\left(\frac{\omega\rho}{c\gamma}\right)-\frac{\omega\rho}{c\gamma}J_1(v_{0k})K_2\left(\frac{\omega\rho}{c\gamma}\right)\right]\Big/\left(\frac{\omega^2}{\gamma^2c^2}+\frac{v_{0k}^2}{\rho^2}\right) \tag{75}$$

and

$$\int_0^\rho dr'r'I_1\left(\frac{\omega r'}{c\gamma}\right)J_1\left(\frac{v_{0k}r'}{\rho}\right)=\left[\frac{\omega\rho}{c\gamma}I_2\left(\frac{\omega\rho}{c\gamma}\right)J_1(v_{0k})+v_{0k}I_1\left(\frac{\omega\rho}{c\gamma}\right)J_2(v_{0k})\right]\Big/\left(\frac{\omega^2}{\gamma^2c^2}+\frac{v_{0k}^2}{\rho^2}\right) \tag{76}$$

one can write Eq. (74) as

$$\vec{\tilde{E}}_2\left(\frac{L}{2},\vec{r}\right)=\frac{4\omega e}{\rho^2c^2\gamma}\sum_{k=1}^\infty\frac{1}{J_1^2(v_{0k})}\exp\left[-\frac{i\omega L}{4c\gamma^2}-\frac{iLv_{0k}^2c}{2\omega\rho^2}\right]\times\int_0^\rho dr'r'\left[K_1\left(\frac{\omega r'}{c\gamma}\right)+\frac{K_0\left(\frac{\omega\rho}{c\gamma}\right)}{I_0\left(\frac{\omega\rho}{c\gamma}\right)}I_1\left(\frac{\omega r'}{c\gamma}\right)\right]\times J_1\left(\frac{v_{0k}r}{\rho}\right)J_1\left(\frac{v_{0k}r'}{\rho}\right)\vec{e}_r \tag{77}$$

because the second and the third terms on the right-hand side of Eq. (75) cancel with Eq. (76) multiplied by $K_0(\omega\rho/(c\gamma))/I_0(\omega\rho/(c\gamma))$. Remembering that an expression for the field propagation from some initial point z_i to some final point z_f is given by Eq. (16), one finds that Eq. (77) is obtained by

propagating the field distribution

$$\vec{\tilde{E}}\left(-\frac{L}{2}\right)=\frac{2\omega e}{c^2\gamma}\exp\left[-\frac{i\omega L}{4c\gamma^2}\right]\left[K_1\left(\frac{\omega r}{c\gamma}\right)+\frac{K_0\left(\frac{\omega\rho}{c\gamma}\right)}{I_0\left(\frac{\omega\rho}{c\gamma}\right)}I_1\left(\frac{\omega r}{c\gamma}\right)\right]\vec{e}_r \tag{78}$$

up to $z_f = L/2$. This can be seen with the help of Eq. (9), selecting $m = 0$.

Now, Eq. (78) is just a generalized expression, valid in the presence of a waveguide, for a virtual source at $z = -L/2$, which is described similarly to Eq. (73), the difference being only its location position.

It follows that the second term in Eq. (67) is obtained propagating the virtual source at $z = -L/2$ up to position $z = L/2$, that is the second term of Eq. (18).

References

[1] G. Geloni, V. Kocharyan, E. Saldin, E. Schneidmiller, M. Yurkov, Theory of edge radiation. Part I: foundations and basic applications, Elsevier Physics, submitted for publication.
[2] O. Chubar, P. Elleaume, A. Snigirev, Nucl. Instr. and Meth. A 435 (1999) 495.
[3] D. Bilderback, P. Elleaume, E. Weckert, J. Phys. B At. Mol. Opt. Phys. 38 (2005) 773.
[4] A. Gover, Phys. Rev. ST AB 8 (2005) 030701.
[5] A. Gover, et al., Phys. Rev. ST AB 8 (2005) 030702.
[6] R.A. Bosch, Nucl. Instr. and Meth. A 482 (2002) 789.
[7] J. Jackson, Classical Electrodynamics, third ed., Wiley, New York, 1999.
[8] G. Geloni, E. Saldin, E. Schneidmiller, M. Yurkov, Nucl. Instr. and Meth. A 584 (2008) 219.
[9] E. Saldin, E. Schneidmiller, M. Yurkov, The Physics of Free Electron Lasers, Springer, Berlin, 2000.
[10] E. Saldin, E. Schneidmiller, M. Yurkov, Nucl. Instr. and Meth. A 445 (2000) 40.
[11] S.A. Heifets, Phys. Rev. D 40 (1989) 2097.
[12] Y. Shibata, et al., Phys. Rev. E 49 (1994) 785.
[13] J. Zheng, et al., Phys. Plasmas 10 (2003) 2994.
[14] C.B. Schroeder, et al., Phys. Rev. E 69 (2004) 016501.
[15] G.L. Orlandi, Opt. Commun. 211 (2002) 109.
[16] G.L. Orlandi, Opt. Commun. 267 (2006) 322.
[17] G.L. Orlandi, in: Proceedings of FEL05, vol. 576, 2005.
[18] E.L. Saldin, E.A. Schneidmiller, M.V. Yurkov, Nucl. Instr. and Meth. A 490 (2002) 1.
[19] S. Heifets, G. Stupakov, S. Krinsky, Phys. Rev. ST AB 5 (2002) 064401.
[20] Z. Huang, K.-J. Kim, Phys. Rev. ST AB 5 (2002) 074401.
[21] E.L. Saldin, E.A. Schneidmiller, M.V. Yurkov, Nucl. Instr. and Meth. A 528 (2004) 355.
[22] E.L. Saldin, E.A. Schneidmiller, M.V. Yurkov, Nucl. Instr. and Meth. A 539 (2005) 4999.
[23] G. Geloni, E. Saldin, E. Schneidmiller, M. Yurkov, Opt. Commun. 281 (2008) 3762.
[24] H. Loos, et al., in: Proceedings of PAC07, vol. 4189, 2007.
[25] A.H. Lumpkin, et al., Phys. Rev. ST AB 10 (2007) 022802.
[26] C.-Y. Yao, A.H. Lumpkin, D.W. Rule, in: Proceedings of PAC07, vol. 3850, 2007.
[27] V.L. Ginzburg, I.M. Frank, Soviet Phys. JETP 16 (1946) 15.
[28] D.V. Karlovets, A.P. Potylitsyn, Nucl. Instr. and Meth. B, 2008, doi:10.1016/j.nimb.2008.02.014.
[29] P. Karataev, et al., Phys. Rev. ST AB 11 (2008) 032804.
[30] G.A. Naumenko, Nucl. Instr. and Meth. B 227 (2005) 87.
[31] P.V. Karataev, Phys. Lett. A 245 (2005) 428.
[32] D. Süttelin, et al., Nucl. Instr. and Meth. B 264 (2007) 361.
[33] G. Stupakov, Y. Ding, Z. Huang, Calculation of the beam field in the LCLS bunch length monitor, SLAC-PUB-11890, 2006.
[34] R.A. Bosch, Phys. Rev. ST AB 5 (2002) 020701.
[35] ZEMAX, Optical Design Program, User's Manual, ZEMAX Development Corporation, 2005.
[36] GLAD, Theory Manual, Applied Optics Research, 2004.
[37] J. Bahrdt, Phys. Rev. ST AB 10 (2007) 060701.