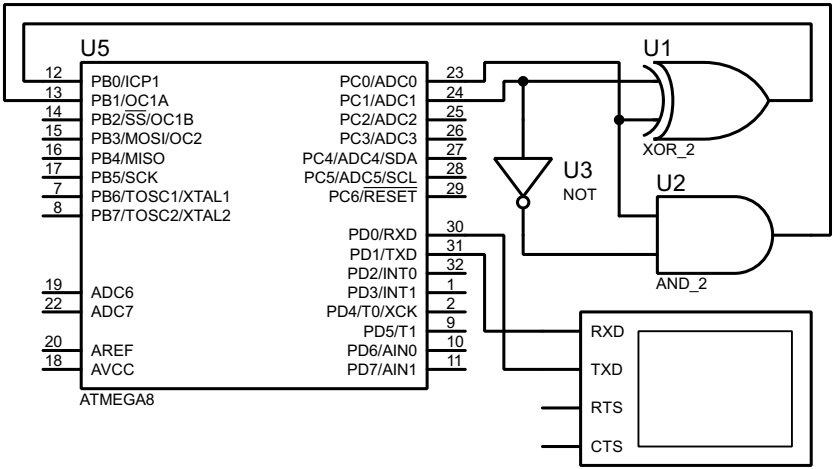
U5
12 PB0/ICP1
13 PB1/OC1A
14 PB2/SS/OC1B
15 PB3/MOSI/OC2
16 PB4/MISO
17 PB5/SCK
7 PB6/TOSC1/XTAL1
8 PB7/TOSC2/XTAL2
19 ADC6
22 ADC7
20 AREF
18 AVCC
ATMEGA8
PC0/ADC0 23
PC1/ADC1 24
PC2/ADC2 25
PC3/ADC3 26
PC4/ADC4/SDA 27
PC5/ADC5/SCL 28
PC6/RESET 29
PD0/RXD 30
PD1/TXD 31
PD2/INT0 32
PD3/INT1 1
PD4/T0/XCK 2
PD5/T1 9
PD6/AIN0 10
PD7/AIN1 11
U1
XOR_2
U3
NOT
U2
AND_2
RXD
TXD
RTS
CTS

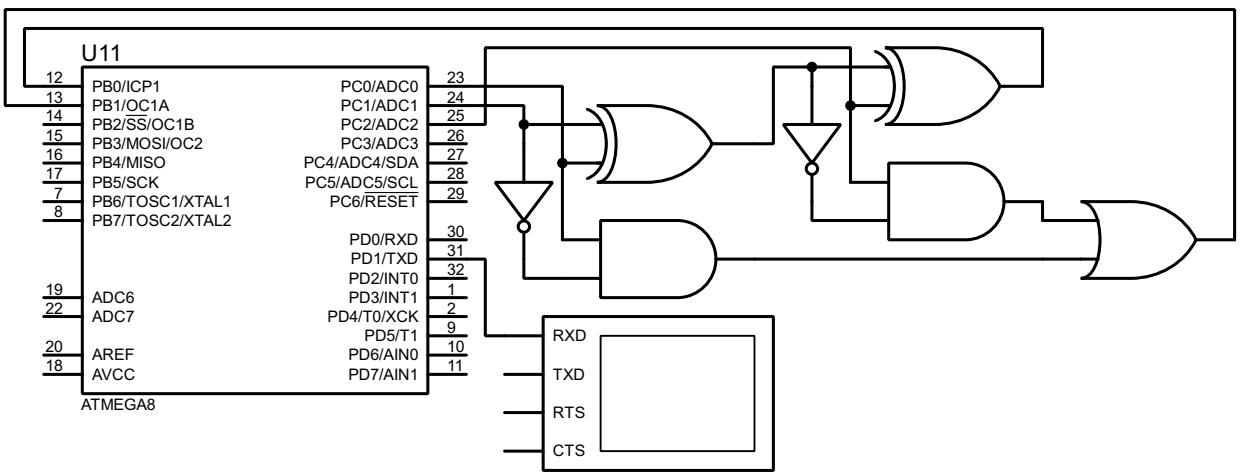
U11
12 PB0/ICP1
13 PB1/OC1A
14 PB2/SS/OC1B
15 PB3/MOSI/OC2
16 PB4/MISO
17 PB5/SCK
7 PB6/TOSC1/XTAL1
8 PB7/TOSC2/XTAL2
19 ADC6
22 ADC7
20 AREF
18 AVCC
ATMEGA8
PC0/ADC0 23
PC1/ADC1 24
PC2/ADC2 25
PC3/ADC3 26
PC4/ADC4/SDA 27
PC5/ADC5/SCL 28
PC6/RESET 29
PD0/RXD 30
PD1/TXD 31
PD2/INT0 32
PD3/INT1 1
PD4/T0/XCK 2
PD5/T1 9
PD6/AIN0 10
PD7/AIN1 11
RXD
TXD
RTS
CTS