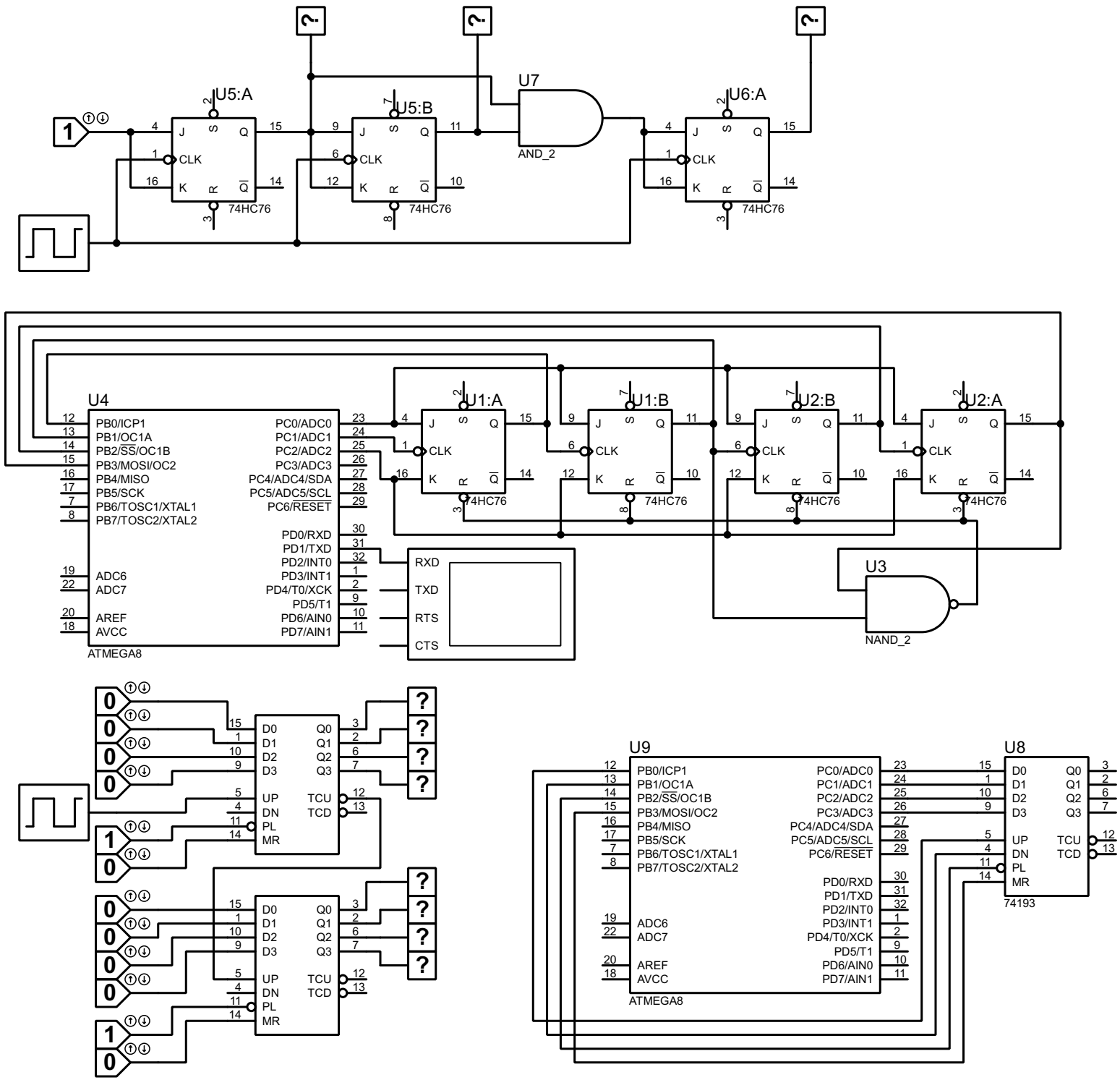
U5:A
U5:B
U6:A
U7
AND_2
74HC76
U4
ATMEGA8
PB0/ICP1
PB1/OC1A
PB2/SS/OC1B
PB3/MOSI/OC2
PB4/MISO
PB5/SCK
PB6/TOSC1/XTAL1
PB7/TOSC2/XTAL2
ADC6
ADC7
AREF
AVCC
PC0/ADC0
PC1/ADC1
PC2/ADC2
PC3/ADC3
PC4/ADC4/SDA
PC5/ADC5/SCL
PC6/RESET
PD0/RXD
PD1/TXD
PD2/INT0
PD3/INT1
PD4/T0/XCK
PD5/T1
PD6/AIN0
PD7/AIN1
RXD
TXD
RTS
CTS
U1:A
U1:B
U2:B
U2:A
U3
NAND_2
U9
U8
74193
D0
D1
D2
D3
Q0
Q1
Q2
Q3
UP
DN
PL
MR
TCU
TCD