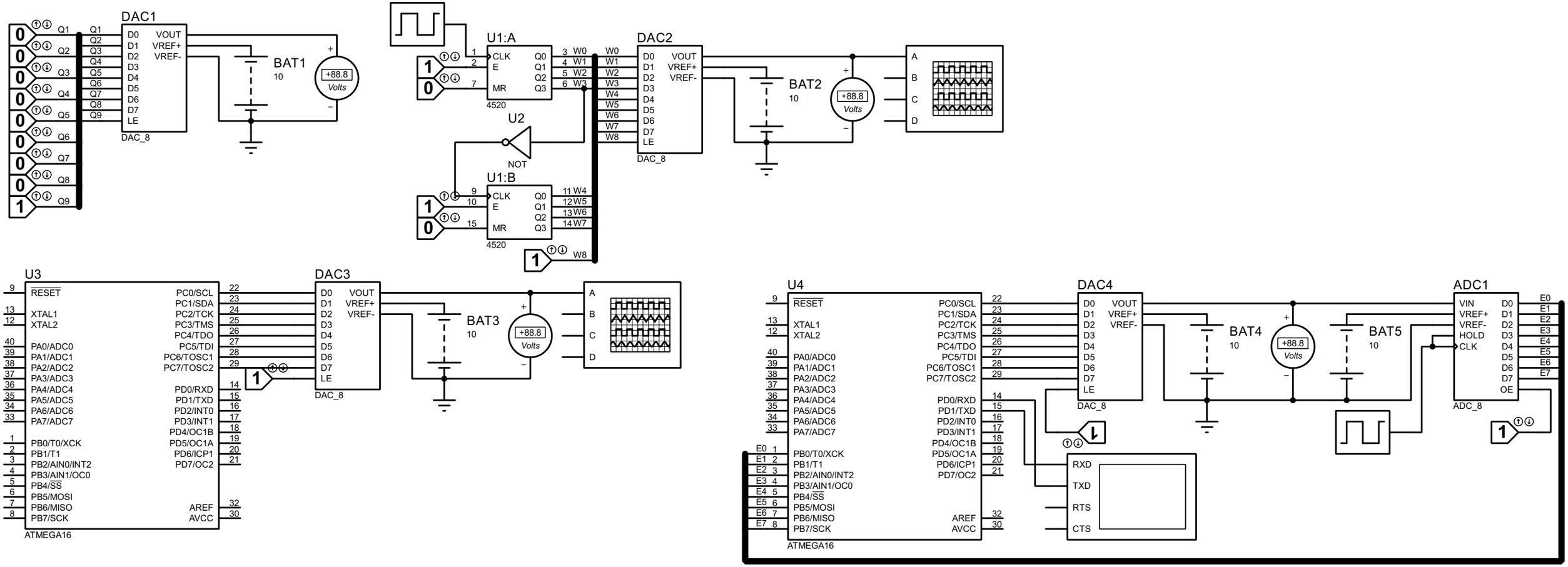
DAC1
DAC_8
BAT1
10
+88.8
Volts
U1:A
4520
U2
NOT
U1:B
4520
DAC2
DAC_8
BAT2
10
U3
ATMEGA16
DAC3
DAC_8
BAT3
10
U4
ATMEGA16
DAC4
DAC_8
BAT4
10
BAT5
10
ADC1
ADC_8
RXD
TXD
RTS
CTS