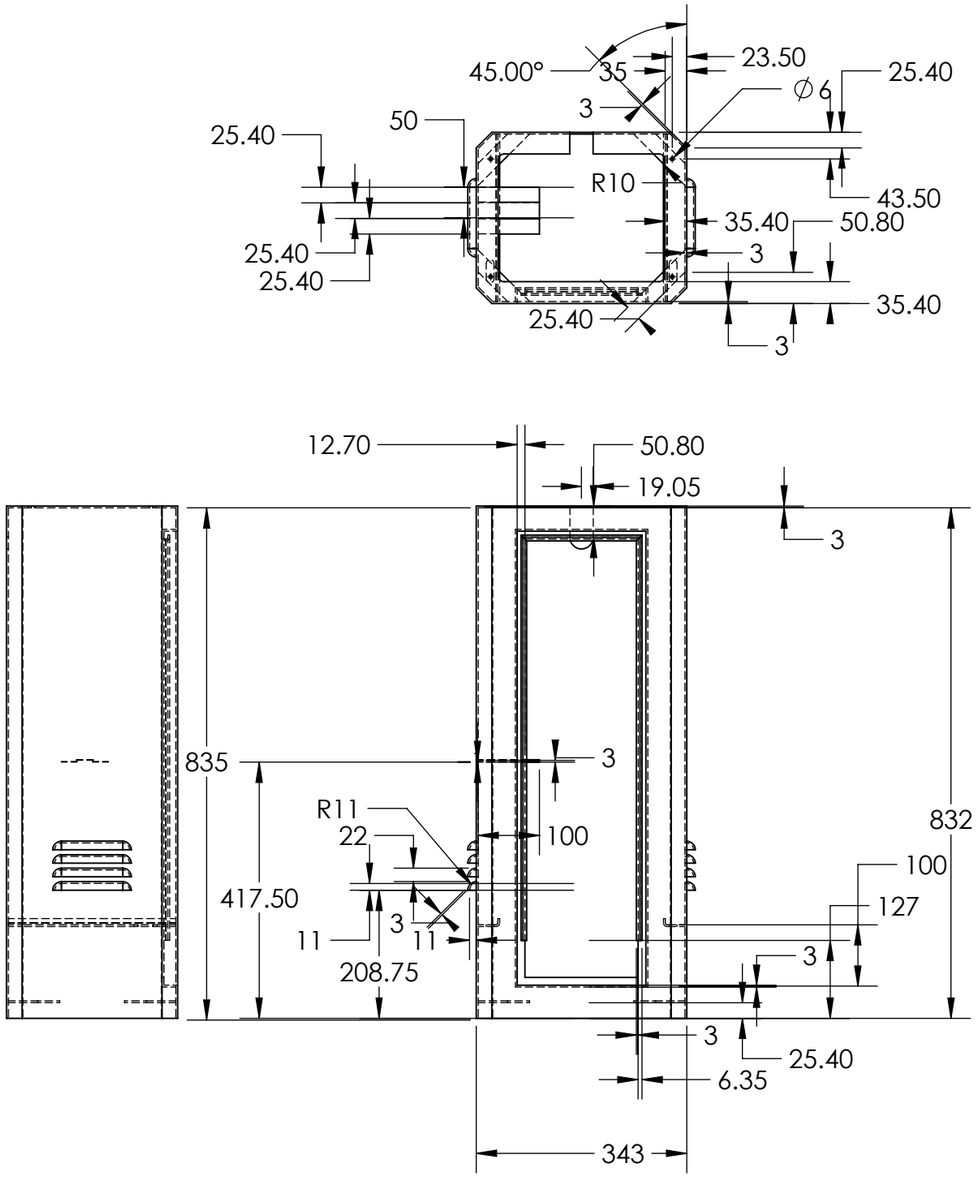

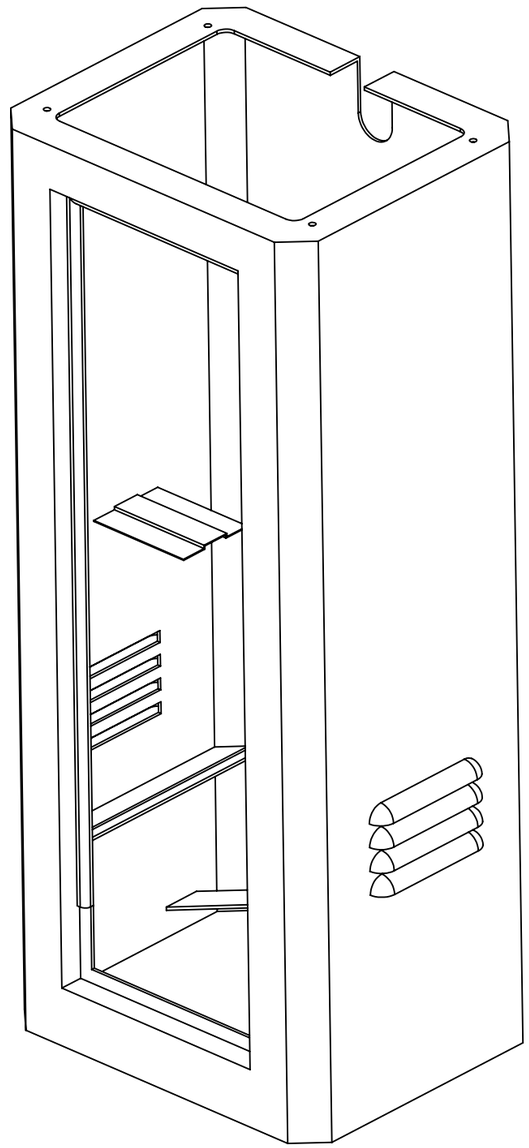

UNLESS OTHERWISE SPECIFIED: DIMENSIONS ARE IN MILLIMETERS SURFACE FINISH: TOLERANCES: LINEAR: ANGULAR:	FINISH:			DEBURR AND BREAK SHARP EDGES		DO NOT SCALE DRAWING	REVISION
	NAME	SIGNATURE	DATE			TITLE: Reversed Iso metric And Back	
DRAWN	Nasim						
CHK'D							
APPV'D							
MFG							
Q.A				MATERIAL:		DWG NO.	A3
				Body Cover Back and Reverse			
				WEIGHT:		SCALE:1:10	SHEET 1 OF 1