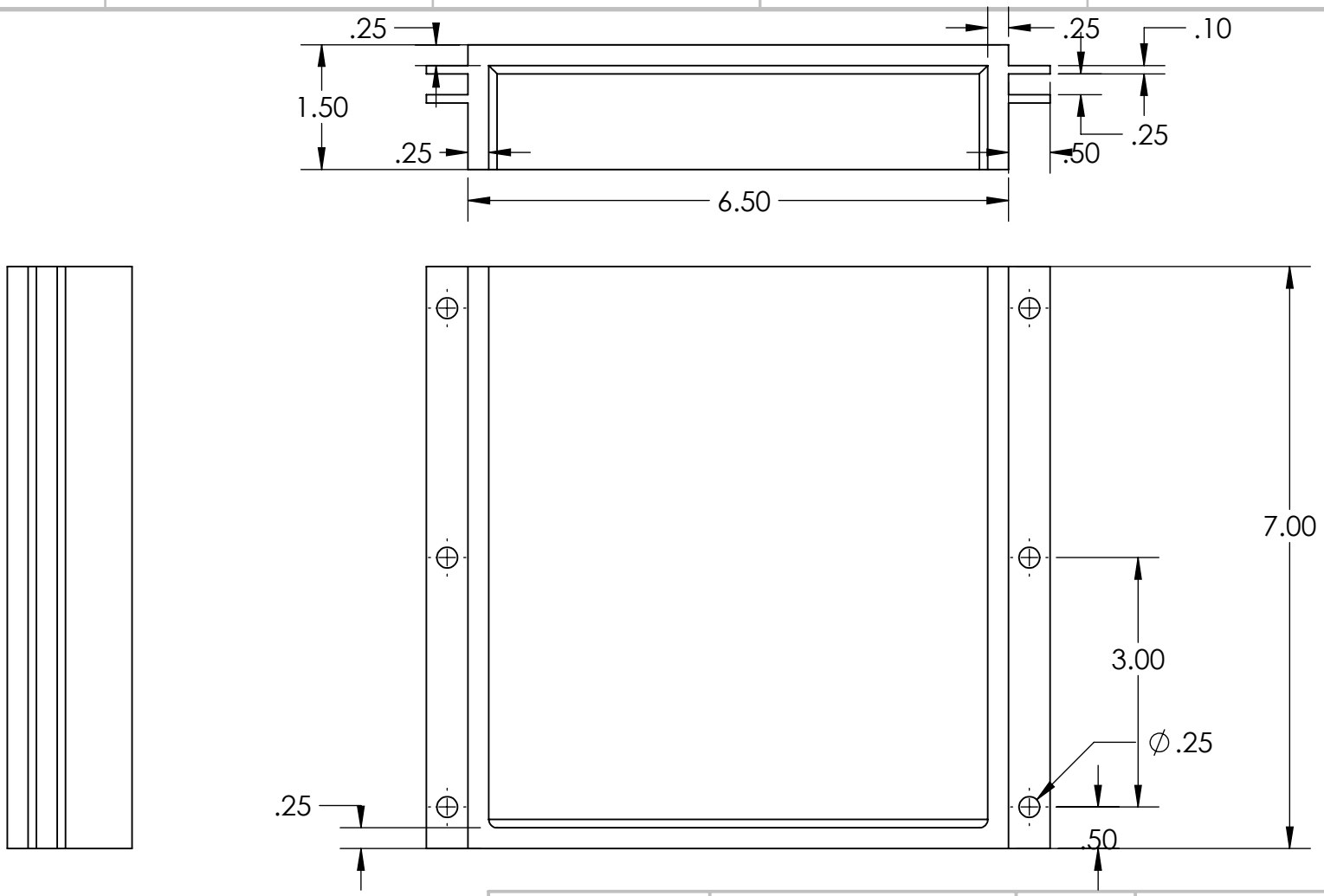

UNLESS OTHERWISE SPECIFIED: DIMENSIONS ARE IN MILLIMETERS SURFACE FINISH: TOLERANCES: LINEAR: ANGULAR:	FINISH:		DEBURR AND BREAK SHARP EDGES	DO NOT SCALE DRAWING	REVISION	
	NAME	SIGNATURE	DATE	TITLE:		
DRAWN	NASIM					
CHK'D						
APPV'D						
MFG						
Q.A				MATERIAL:	DWG NO. Clamp	A4
				WEIGHT:	SCALE:1:2	SHEET 1 OF 1