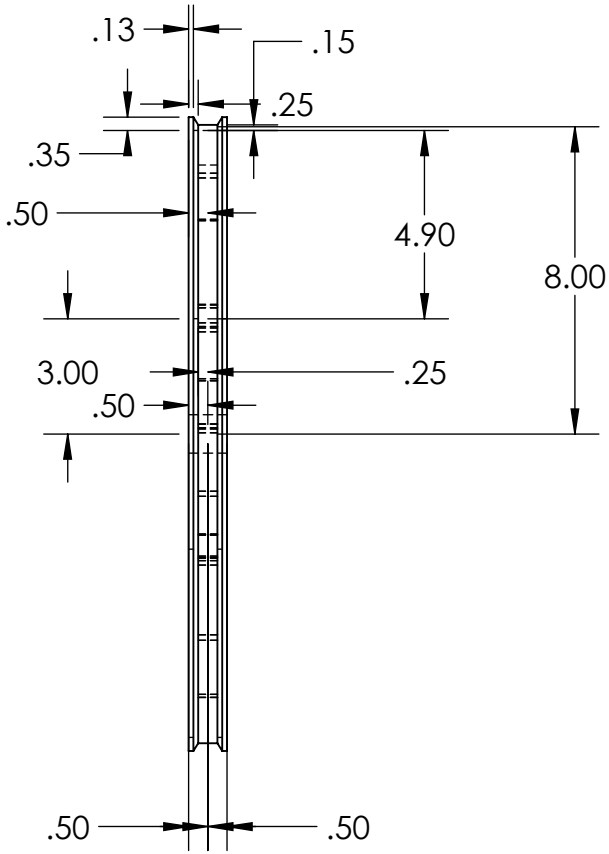

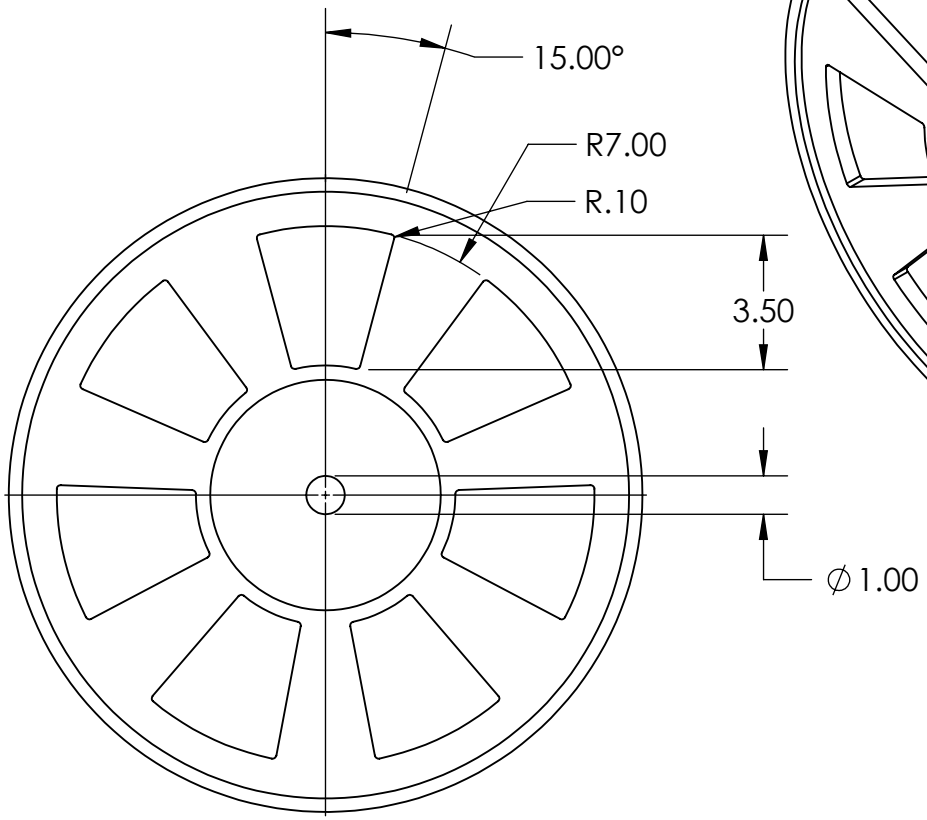

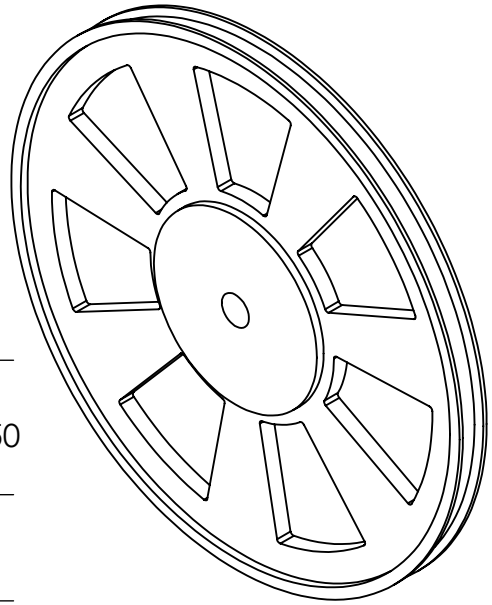

UNLESS OTHERWISE SPECIFIED: DIMENSIONS ARE IN MILLIMETERS SURFACE FINISH: TOLERANCES: LINEAR: ANGULAR:	FINISH:			DEBURR AND BREAK SHARP EDGES	DO NOT SCALE DRAWING	REVISION
	NAME	SIGNATURE	DATE		TITLE:	
DRAWN	NASIM					
CHK'D						
APPV'D						
MFG						
Q.A				MATERIAL: MS	DWG NO. Gear	A4
				WEIGHT:	SCALE:1:5	SHEET 1 OF 1