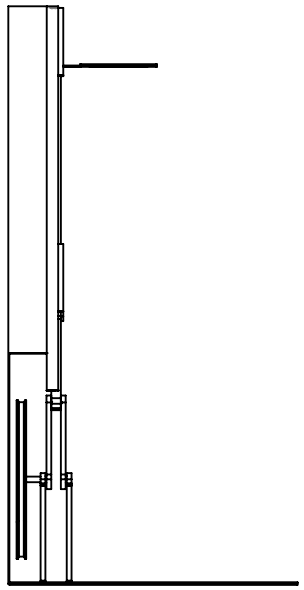

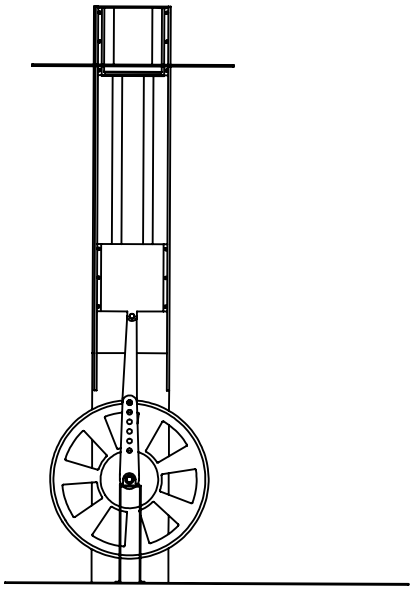

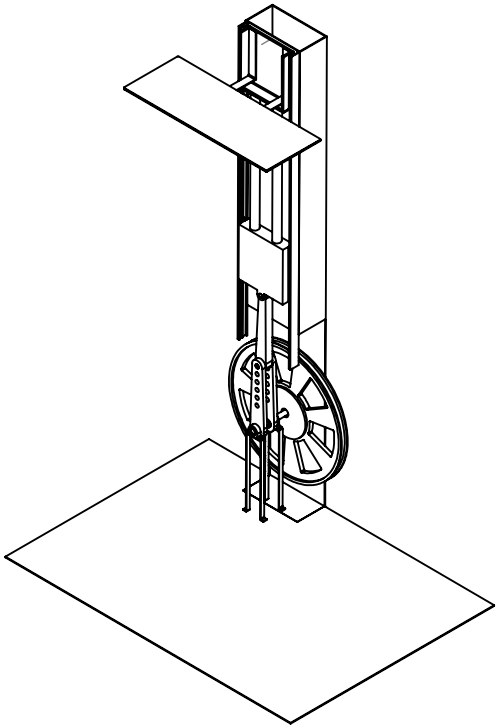

UNLESS OTHERWISE SPECIFIED: DIMENSIONS ARE IN MILLIMETERS SURFACE FINISH: TOLERANCES: LINEAR: ANGULAR:	FINISH:				DEBURR AND BREAK SHARP EDGES	DO NOT SCALE DRAWING / REVISION
	NAME	SIGNATURE	DATE			TITLE:
DRAWN	NASIM					
CHK'D						
APPV'D						
MFG						
Q.A				MATERIAL:		DWG NO. Crank Assembly A4
				WEIGHT:		SCALE:1:20 / SHEET 1 OF 1