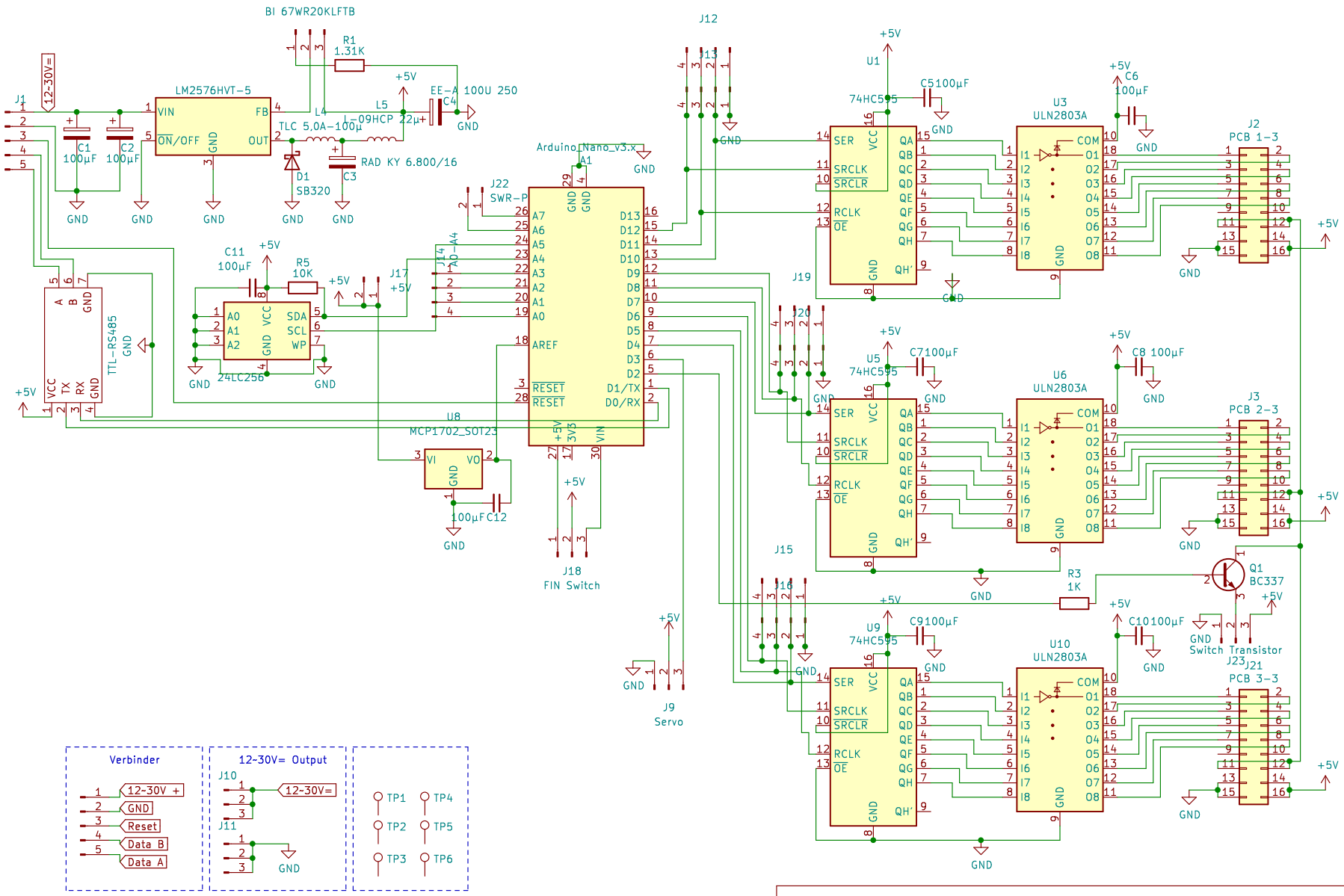

Tobias Ossig
Automatic Coupler

Sheet: /
File: Controller.kicad_sch

Title: TOAC-Controller

Size: A	Date: 2022-04-28	**Rev: 2.1**
KiCad E.D.A. kicad (6.0.0)		Id: 1/1