1.1. Baud Rate Generator Block.

This block is used to generate the transmit/receive baud rate for the UART APB. The transmit/receive baud rate is divided down from PCLK. PCLK is divided by a 16-bit programmable register (with values from 1 to 2^16 - 1). Then, this clock is further divided by 16 to create the transmit/receive baud rate for UART-APB.

Baud Rate = pclk / (16(DV+1))

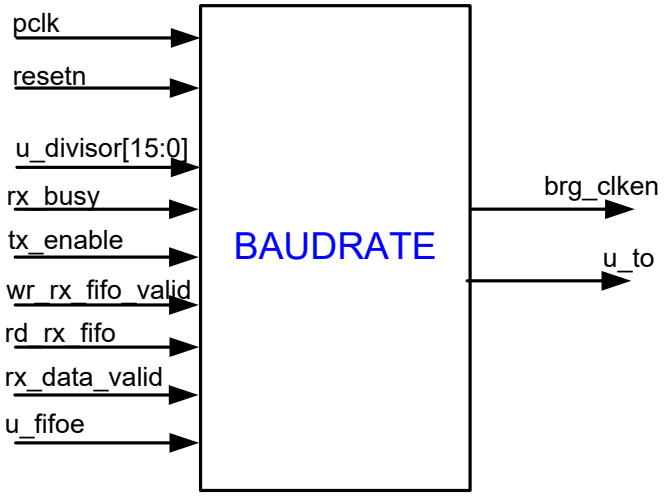

Figure 13.3: Pin diagram of the Baud Rate block**Error! No text of specified style in document.**1

Table 13.2: Description of Baud Rate block pins**Error! No text of specified style in document.**-1

Pin name	Input/Output	Function
Pclk	Input	APB clock input
presetn	Input	Synchronous reset signal
u_divisor[15:0]	Input	Frequency divisor register
rd_rx_fifo	Input	Receive FIFO read signal

rx_data_valid	Input	Receive FIFO has data
wr_rx_fifo_valid	Input	Receive FIFO write signal
tx_enable	Input	Data transmission enable
rx_busy	Input	UART-APB is receiving data
u_fifoe	Input	UART enable
u_to	Output	Indicates stop time error
brg__clken	Output	Serial data input signal

1.2. Data Transmission Control Block.

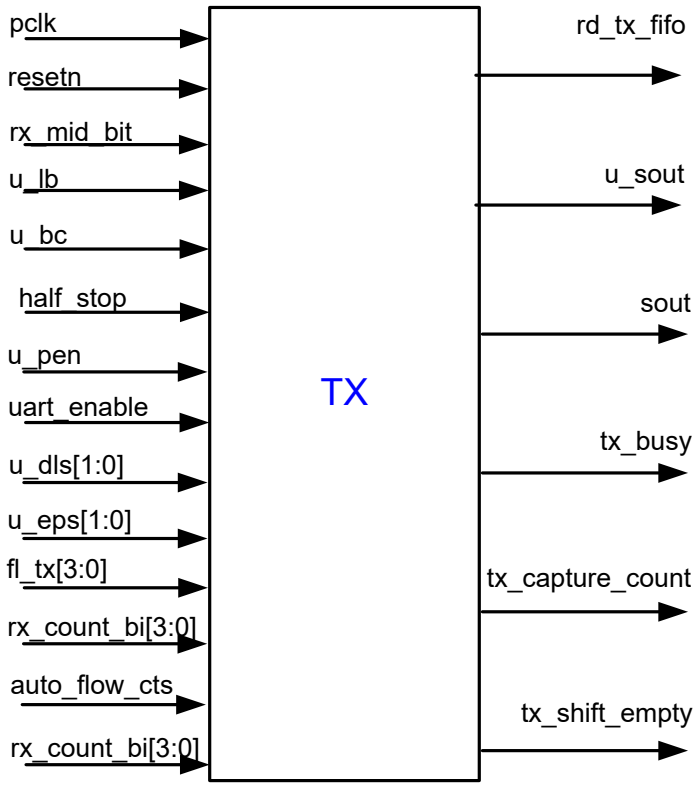

Figure 13.10: TX_CONTROL block**Error! No text of specified style in document.**2

Table 133: Description of TX_CONTROL block pins**Error! No text of specified style in document.**-2

Pin name	Input/Output	Function
Pclk	Input	APB clock provided
presetn	Input	Synchronous reset signal
brg_clken	Input	Baudrate signal
rx_mid_bit	Input	Determines mid-bit position
half_stop	Input	Half STOP bit request
u_bc	Input	Request to send line stop signal
u_lb	Input	Loopback request
tx_fifo_data[7:0]	Input	Data from transmit FIFO
u_pen	Input	Parity bit enable
tx_fifo_empty	Input	Transmit FIFO empty
fl_tx[3:0]	Input	Transmit data frame length
u_dls[1:0]	Input	Data length selection
u_pm[1:0]	Input	Parity check mode
auto_flow_cts	Input	Handshake signal with MODEM
uart_enable	Input	UART enable
tx_busy	Output	UART-APB is transmitting data

tx_shift_empty	Output	Shift register empty
Sout	Output	Serial data output to receiver block
u_sout	Output	UART serial data output
rd_tx_fifo	Output	Transmit FIFO read signal

1.3. Receive Process Control Block (RX_CONTROL)

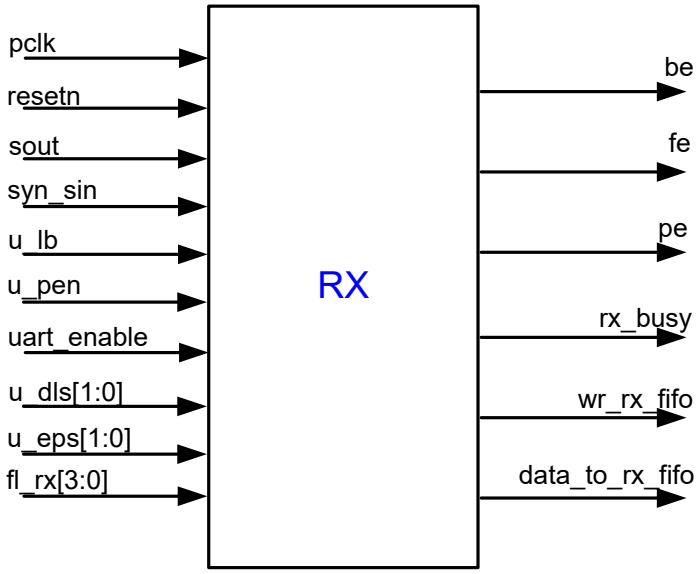

Figure 13.15: Pin diagram of the receive process control block (RX_CONTROL)**Error! No text of specified style in document.**3

Table 135: Description of RX_CONTROL block pins**Error! No text of specified style in document.**-3

Pin name	Input/Output	Function
Pclk	Input	APB clock provided

presetn	Input	Synchronous reset signal
u_bc	Input	Request to send transmission stop signal
u_lb	Input	Request to receive feedback
u_pen	Input	Enable parity bit
u_dls[1:0]	Input	Defines data length
u_pm[1:0]	Input	Parity check mode
u_dls[1:0]	Input	Defines data length
rx_fifo_full	Input	Receive FIFO full of data
fl_rx[3:0]	Input	Received data frame length
brg_clken	Input	Serial data transmit signal
Sout	Input	Serial data output from the transmitter block
uart_enable	Input	UART enable
syn_sin	Input	Serial data input after synchronization
rx_busy	Output	UART-APB is receiving data
rx_fifo_data[7:0]	Output	Received data fed into receive FIFO
wr_rx_fifo	Output	Write signal to receive FIFO
Pe	Output	Parity bit error check
Fe	Output	Frame error check
Be	Output	Break signal check

The RX_CONTROL block has three sub-blocks:

- Data selection block: In loopback mode, it receives data from the transmitter block (sout). In normal mode, it receives data from the serial input (syn_sin).
- State machine (RX_FSM): Controls the receive states.
- Error detection block: checks parity bit, transmission errors, break signal, and receive buffer overflow errors.

1.4. Transmit FIFO Design

FIFO uses SRAM, this SRAM operates synchronously with the system clock, and this SRAM operates in 2-port mode, meaning the read and write processes are independent of each other.

In non-FIFO mode, UART-APB uses only one SRAM register as a buffer.

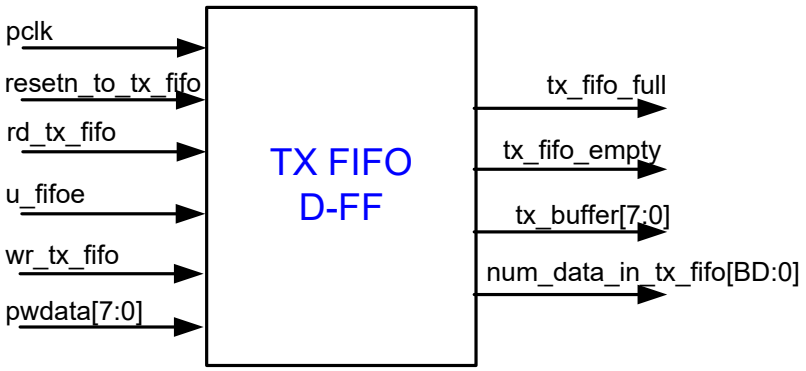

Figure 13.22: Transmit FIFO pin diagram**Error! No text of specified style in document.**4

Table 136: Description of transmit FIFO pins.**Error! No text of specified style in document.**-4

Pin name	Input/Output	Function
pclk	Input	APB clock provided

resetn_totx_fifo	Input	Synchronous reset signal
wr_tx_fifo	Input	Write data signal to transmit FIFO
wd_tx_fifo	Input	Read data signal from transmit FIFO
pwdata[7:0]	Input	Data input to transmit FIFO
tx_fifo_data[7:0]	Output	Data output from transmit FIFO
tx_fifo_full	Output	Transmit FIFO full
tx_fifo_empty	Output	Transmit FIFO empty
Num_data_in_tx_fifo	Output	Number of data in transmit FIFO

1.5. Receive FIFO Design.

The reception process uses 2 FIFOs: one data FIFO and one status FIFO. The status FIFO indicates errors of the corresponding data stored in the receive data FIFO. The error interrupt flag is set when the output data of the receive FIFO has errors. The error interrupt is cleared by reading data from the receive FIFO or the status FIFO.

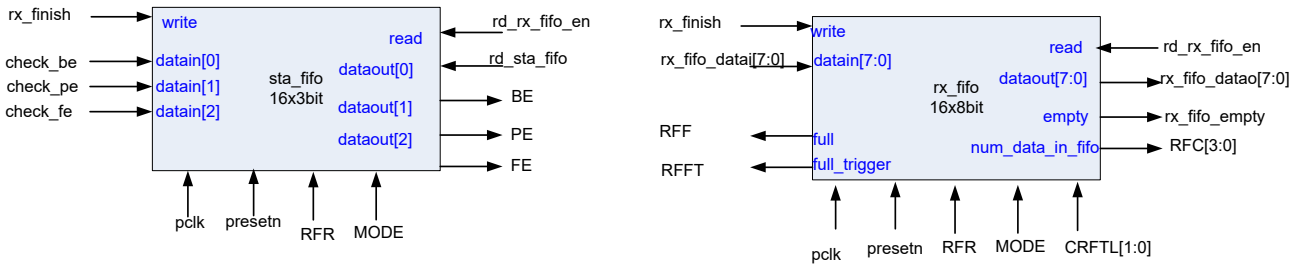

Figure 13.30: Block diagram of status FIFO (sta_fifo) and receive data FIFO (rx_fifo)**Error! No text of specified style in document.**5 UART-APB Control Block.

1.5.1. Block diagram of u_control

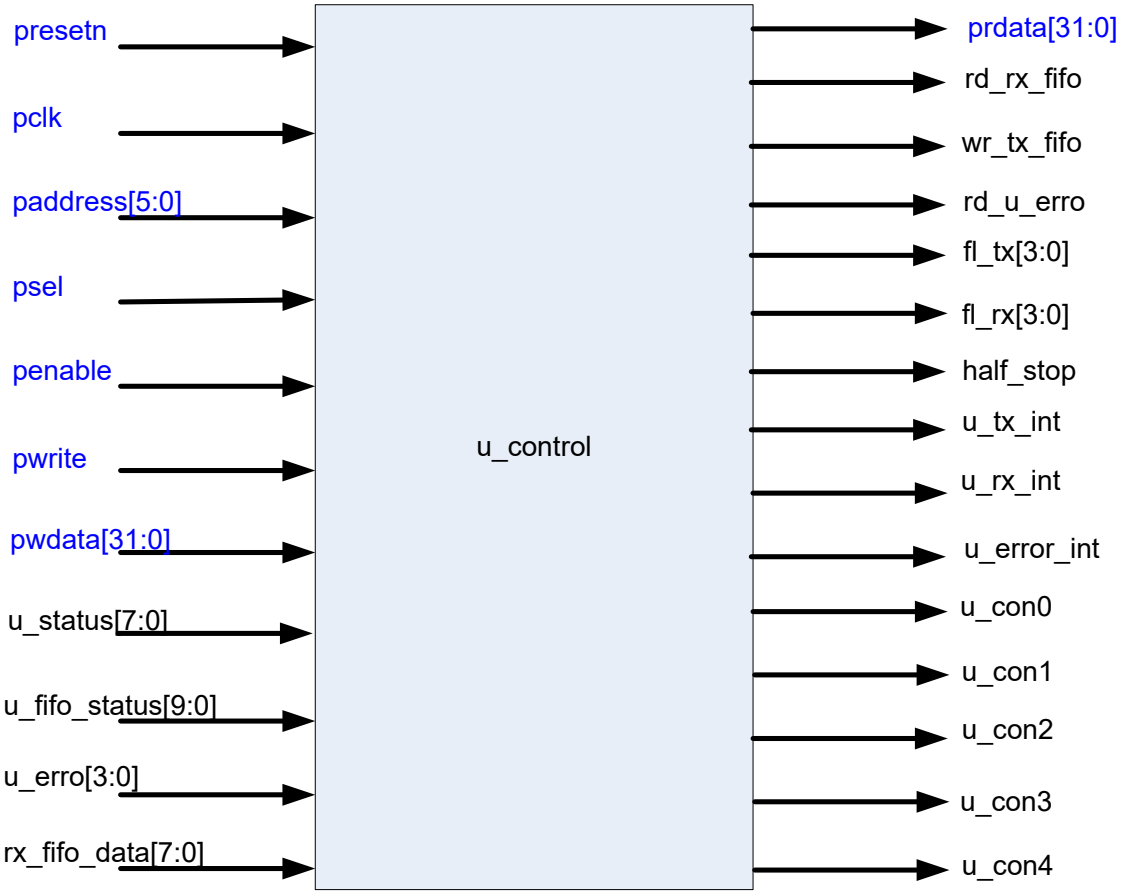

Figure 13.35 Pin diagram of u_control block**Error! No text of specified style in document.**6

Control and status registers (see register table section).

Table 1311: Description of u_control block pins**Error! No text of specified style in document.**-5

Pin name	Input/Output	Function
rd_rx_fifo	Output	UART-APB is receiving data
wr_tx_fifo	Output	Received data is put into receive FIFO
fl_tx[3:0]	Output	Transmit data frame length
fl_tx[3:0]	Output	Receive data frame length

half_stop	Output	Request to send 0.5 Stop bit
rd_u_error	Output	UART-APB has received one data
u_tx_int	Output	Parity bit error check
u_tx_int	Output	Frame error check
u_rx_int	Output	Line stop signal check
u_error_int	Output	Buffer overflow check

1.6. Interrupt Generation:

UART APB has 6 interrupt sources as follows:

- Error interrupt
- Receive interrupt
- Timeout interrupt (only in FIFO mode)
- Transmit interrupt
- Modem status interrupt
- Interrupt on register change while UART APB is transmitting data (Busy Detect Indication).

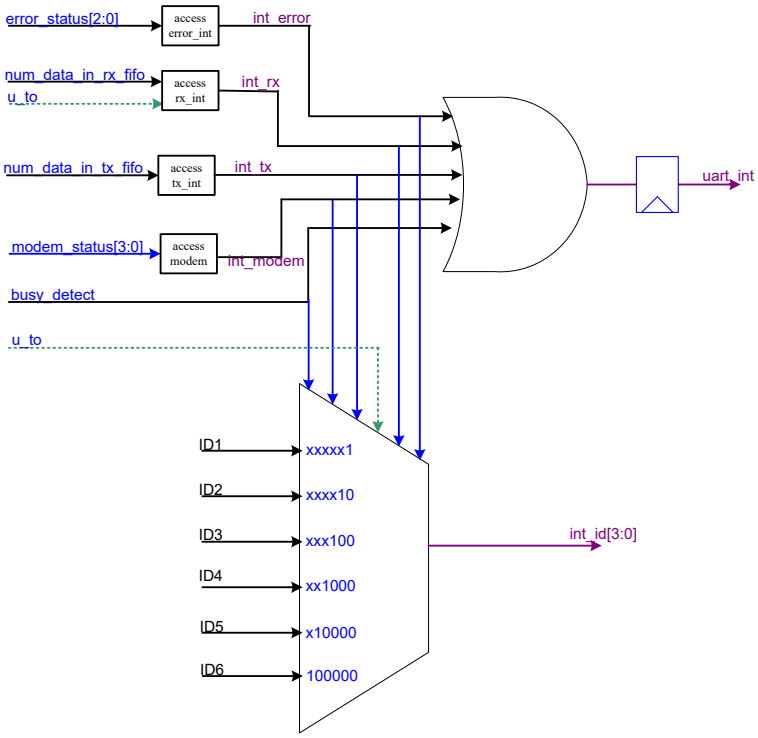

Figure 13.43: Interrupt block description**Error! No text of specified style in document.**7

1.7. MODEM Interface Block

Modem (short for modulator and demodulator) is a device that modulates analog signal waves to encode digital data and demodulates carrier signals to decode digital signals. The modem control block is used to control and interface with external modems.

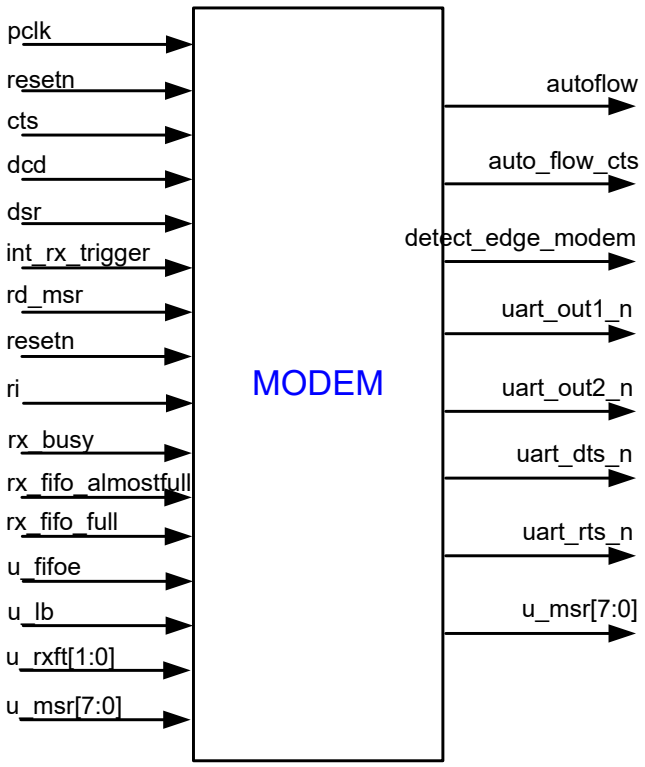

Figure 13.48: Pin Description**Error! No text of specified style in document.**8

Table 1312: Pin Description**Error! No text of specified style in document.**-6

Pin Name	Input/Output	Function
Pclk	Input	APB clock input
presetn	Input	APB reset
Cts	Input	MODEM data request
Dsr	Input	MODEM ready to send data
Dcd	Input	Modem data input detection
Ri	Input	Modem ring status
int_rx_trigger	Input	Receive interrupt
rd_msr	Input	Modem status register read signal

rx_busy	Input	UART receiving data
rx_fifo_almostfull	Input	Receive FIFO almost full (FULL-1)
rx_fifo_full	Input	Receive FIFO full
u_fifoe	Input	FIFO enable signal
u_lb	Input	Loopback receive
u_rxft[1:0]	Input	Receive trigger level
u_cmr[7:0]	Input	Modem control register
auto_flow	Output	Enable AUTOFLOW
auto_flow_cts	Output	Enable AUTOFLOW receive
detect_edge_modem	Output	Detect changes of MODEM signals
u_msr[7:0]	Output	MODEM status register
uart_out1_n	Output	First programmable output
uart_out2_n	Output	Second programmable output
uart_dtr_n	Output	UART ready to transmit data
uart_rts_n	Output	UART request data

UART APB can be configured to operate in auto flow mode. This mode can only be selected when FIFO is chosen during configuration. If FIFO is not selected, this mode cannot be chosen and the circuit will not be generated. When Auto Flow is selected, it will be controlled by programming the MCR register.

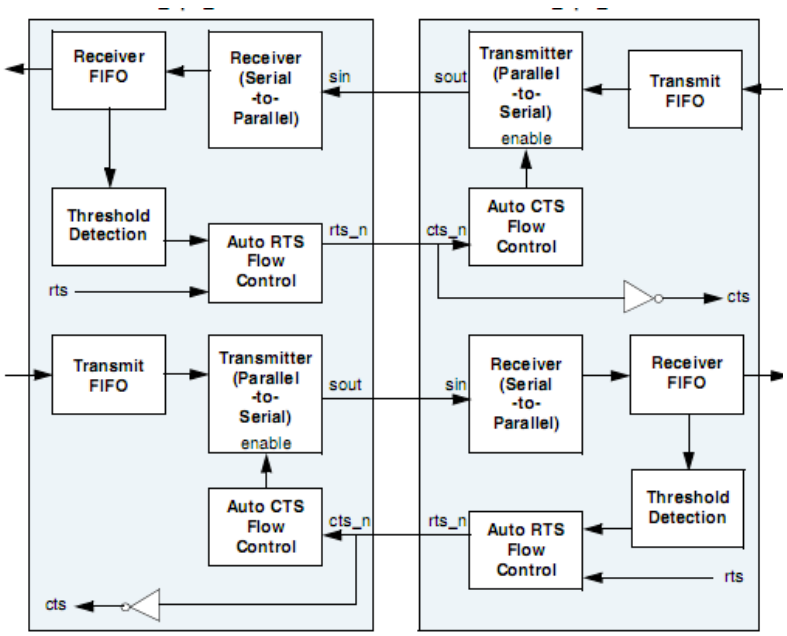

Figure 13.49: AutoFlow connection**Error! No text of specified style in document.**9

Auto Flow includes two modes: Auto-CTS and Auto-RTS. With Auto-CTS, the CTS input must be active before the Tx FIFO transmits data. With Auto-RTS, RTS must be active when the receiver block needs data; it acts as a notification signal for the transmitter block to send data.

The Auto RTS and Auto CTS modes are described as follows:DMA Interface Block Design

This block is used to handshake with the Direct Memory Access controller (DMAC). The UART APB uses two output signals (uart_dma_tx_req_n and uart_dma_rx_req_n) to indicate when the data in the receive buffer is ready for DMAC to read or when the transmit buffer is empty for DMAC to write data. UART APB uses two channels, one for transmission and one for reception.

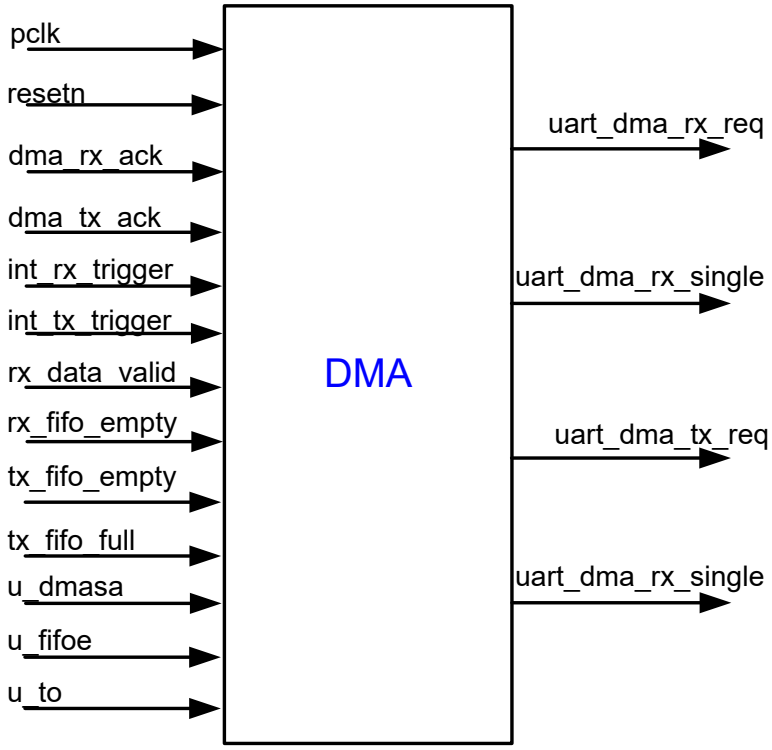

Figure 13.61: DMA block pin description**Error! No text of specified style in document.**10

Table 1313: DMA block pin description**Error! No text of specified style in document.**-7

Pin name	Input/ Output	Function
Pclk	Input	APB clock provided
Present	Input	APB reset
dma_tx_ack	Input	ACK from DMA
dma_rx_ack	Input	ACK from DMA
u_dmasa	Input	ACK from Software
int_rx_trigger	Input	Receive interrupt

int_tx_trigger	Input	Transmit interrupt
rx_data_valid	Input	Receive FIFO has data
rx_fifo_empty	Input	Receive FIFO empty
tx_fifo_full	Input	Transmit FIFO full
tx_fifo_empty	Input	Transmit FIFO empty
u_fifoe	Input	FIFO mode enable
u_to	Input	Timeout interrupt
uart_dma_tx_req	Output	DMA write request signal in burst mode (4-byte, 8-byte, etc.).
uart_dma_tx_single	Output	DMA write request signal per byte
uart_dma_rx_req	Output	DMA read request signal in burst mode (4-byte, 8-byte, etc.).
uart_dma_rx_single	Output	DMA read request signal per byte

uart_dma_tx_req and uart_dma_rx_req are DMA request signals for reading or writing data to UART APB. uart_dma_tx_req and uart_dma_rx_req are active when their corresponding FIFO reaches the trigger level. DMAC detects edges of uart_dma_tx_req and uart_dma_rx_req to determine requests of each channel. DMAC sends dma_tx_ack and dma_rx_ack signals to indicate that read and write operations have completed.

uart_dma_tx_single / uart_dma_rx_single are DMA request signals for reading or writing data to UART APB per byte.

When dma_tx_ack and dma_rx_ack are active, their corresponding request signals must immediately return to inactive level.

When dma_tx_ack and dma_rx_ack become inactive, their corresponding request signals will become active again if DMA request conditions are met.

- *uart_dma_tx_req / uart_dma_tx_single*

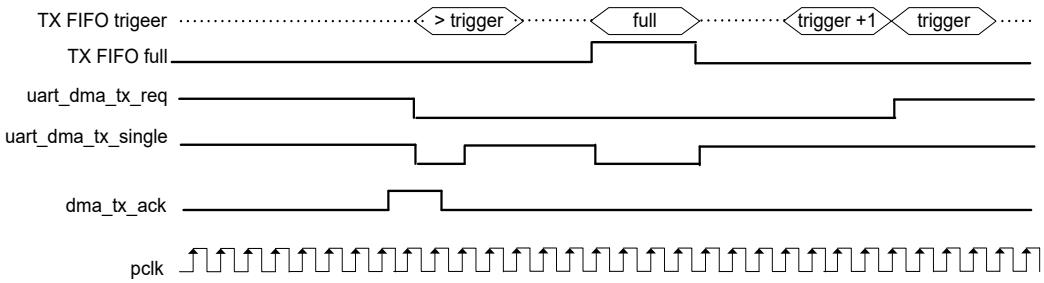

Figure 13.62: Timing of uart_dma_tx (mode 0)**Error! No text of specified style in document.**11

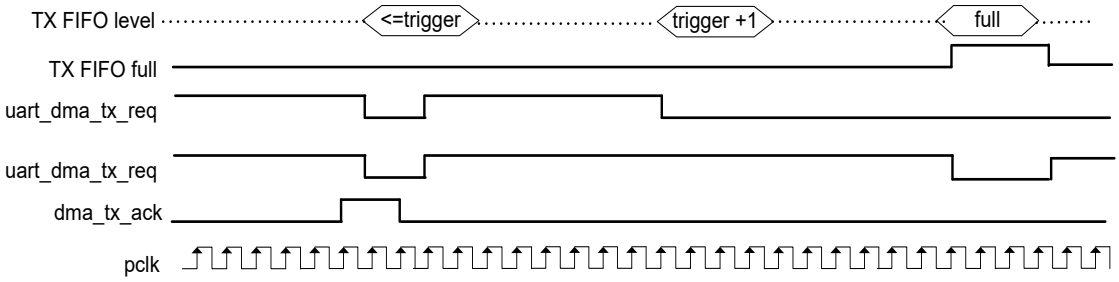

Figure 13.63: Timing of uart_dma_tx (mode 1)**Error! No text of specified style in document.**12

- *uart_dma_rx_req / uart_dma_rx_single*

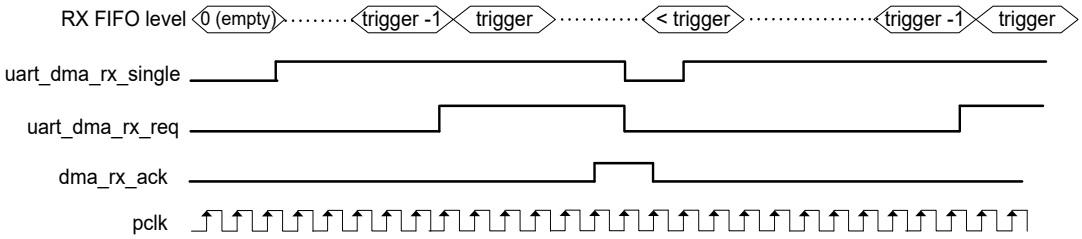

Figure 13.64: Timing of uart_dma_rx (mode 0)**Error! No text of specified style in document.**13

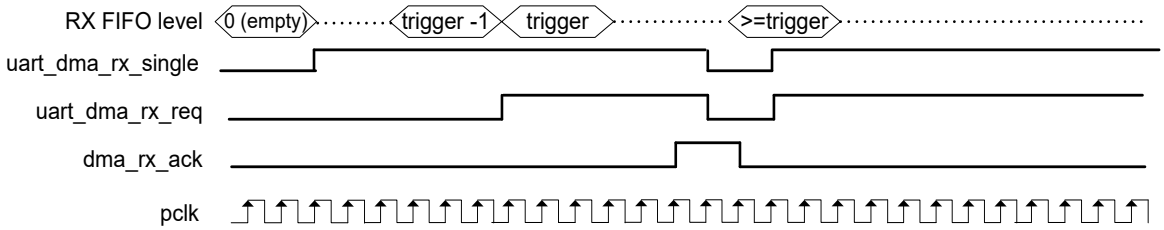

Figure 13.65: Timing of uart_dma_rx (mode 1)**Error! No text of specified style in document.**14

Error! No text of specified style in document.15

1.8. Synchronizer block design

Input signals must be synchronized with pclk. Usually, 2 D-FFs are added at the input.

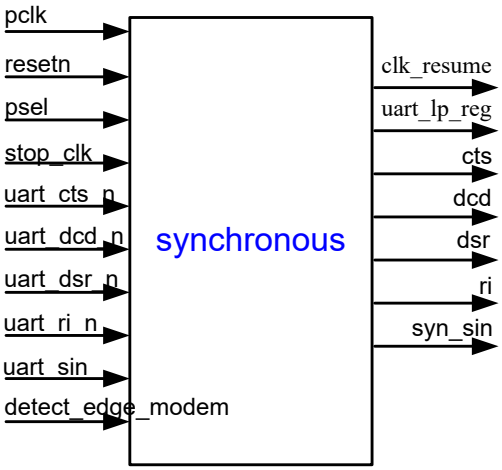

Figure 13.70: Pin description of SYNCHRONIZER block**Error! No text of specified style in document.**16

Table 1314: Pin description of SYNCHRONIZER block**Error! No text of specified style in document.**-8

Name	I/O	Description
pclk	Input	APB clock

resetn	Input	Synchronizer reset
uart_cts_n	Input	MODEM data request
uart_dsr_n	Input	MODEM ready to send data
uart_dcd_n	Input	MODEM data carrier detect
uart_ri_n	Input	MODEM ring indicator status
uart_sin	Input	Serial input
cts	Output	Synchronized MODEM data request signal
dsr	Output	Synchronized MODEM ready to send data signal
dcd	Output	Detection of synchronized incoming data from MODEM
ri	Output	Synchronized ring status of MODEM
syn_sin	Output	Synchronized serial input

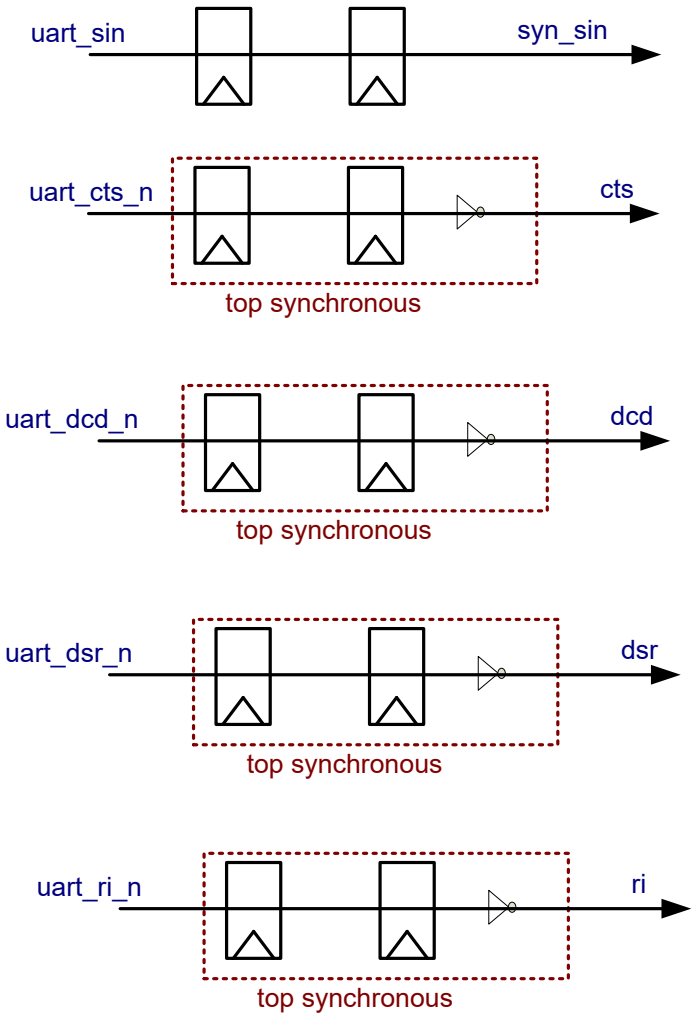

Figure 13.71: Signal synchronization circuit **Error! No text of specified style in document.**17