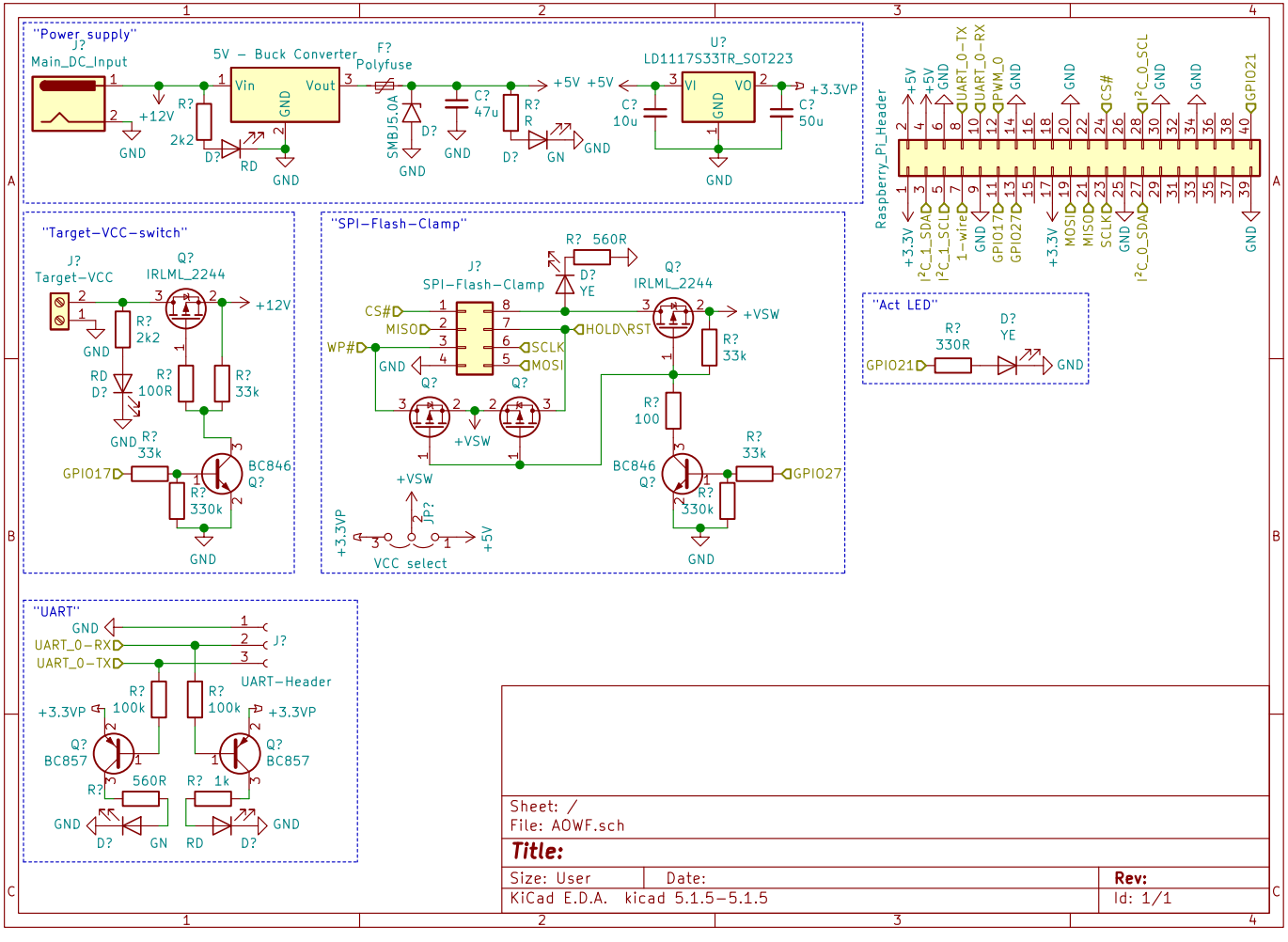
"Power supply"
J?
Main_DC_Input
+12V
GND
R?
2k2
D?
RD
5V – Buck Converter
Vin
Vout
GND
F?
Polyfuse
SMBJ5.0A
D?
C?
47u
R?
R
D?
GN
+5V +5V
C?
10u
U?
LD1117S33TR_SOT223
VI
VO
GND
+3.3VP
C?
50u
"Target-VCC-switch"
J?
Target-VCC
Q?
IRLML_2244
+12V
R?
2k2
RD
D?
R?
100R
R?
33k
R?
33k
GPIO17
BC846
Q?
R?
330k
"SPI-Flash-Clamp"
R? 560R
D?
YE
J?
SPI-Flash-Clamp
Q?
IRLML_2244
+VSW
CS#
MISO
WP#
GND
HOLD\RST
SCLK
MOSI
R?
33k
R?
100
BC846
Q?
R?
33k
GPIO27
R?
330k
+VSW
JP?
+3.3VP
VCC select
+5V
"Act LED"
R?
330R
D?
YE
GPIO21
GND
Raspberry_Pi_Header
+5V
+5V
GND
UART_0-TX
UART_0-RX
PWM_0
GND
GND
CS#
I2C_0_SCL
GND
GND
GPIO21
+3.3V
I2C_1_SDA
I2C_1_SCL
1-wire
GND
GPIO17
GPIO27
+3.3V
MOSI
MISO
SCLK
GND
I2C_0_SDA
GND
"UART"
GND
UART_0-RX
UART_0-TX
J?
UART-Header
R?
100k
R?
100k
+3.3VP
+3.3VP
Q?
BC857
Q?
BC857
R?
560R
R? 1k
GND
D?
GN
RD
D?
GND
Sheet: /
File: AOWF.sch
Title:
Size: User
Date:
Rev:
KiCad E.D.A. kicad 5.1.5-5.1.5
Id: 1/1