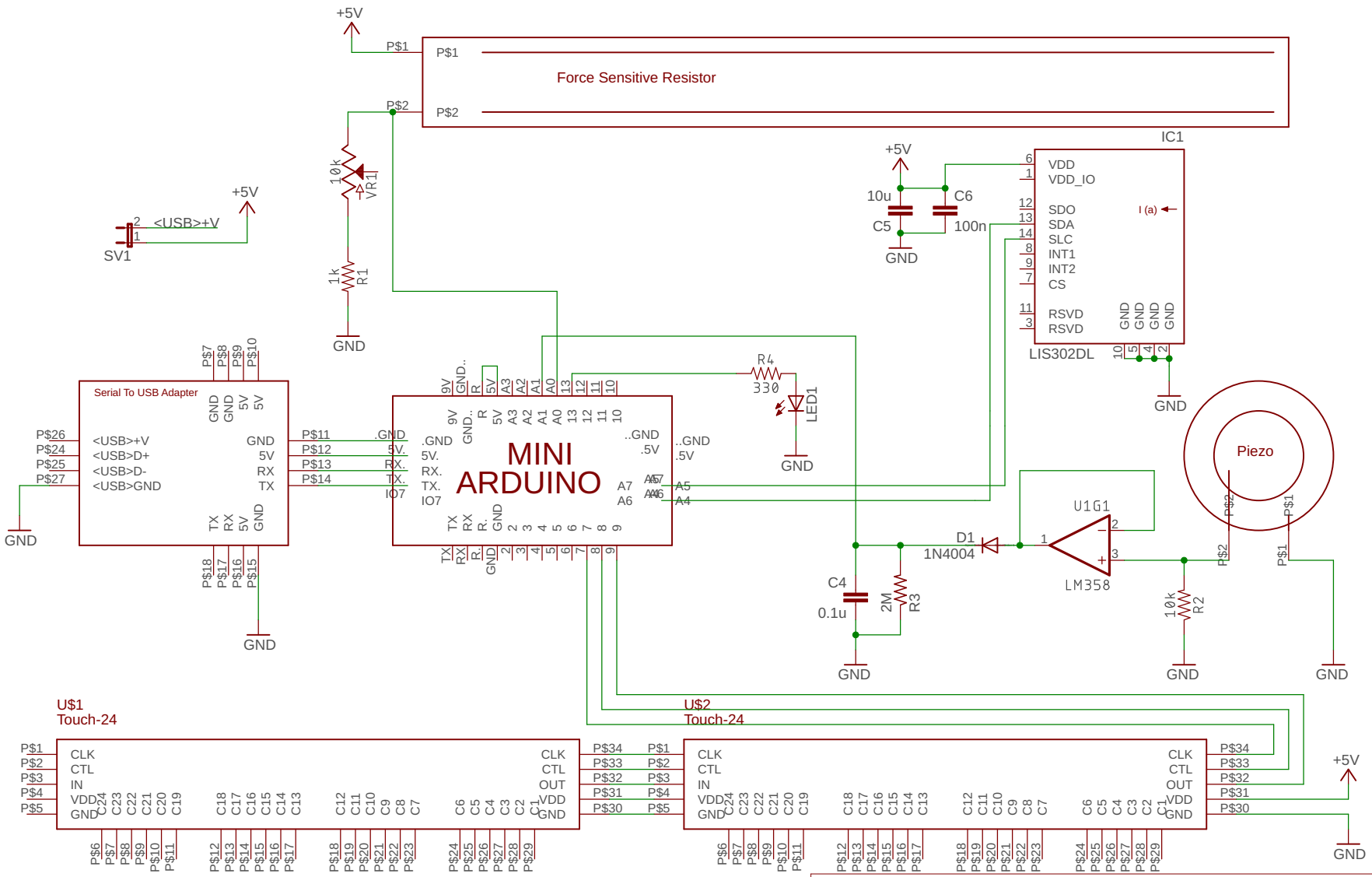

Author: Alex Nieva
IDMIL. DMI Design: Joseph Malloch

TITLE: Soprano2G-024

Document Number: 1

REV: 1

Date: 2018-10-24 7:12 PM

Sheet: 1/1