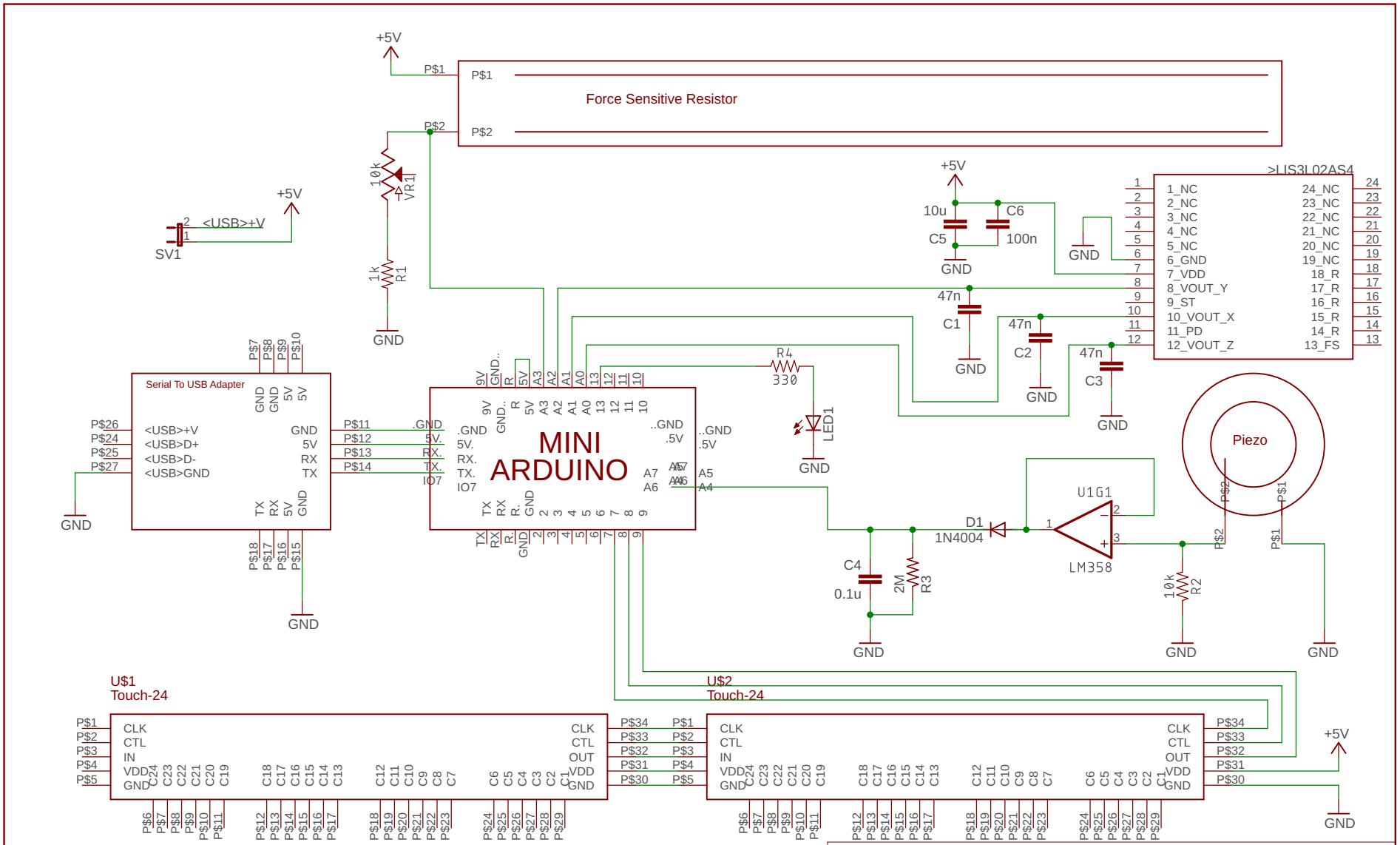

Author: Alex Nieva
IDMIL. DMI Design: Joseph Malloch

TITLE: Soprano2G-010

Document Number: 1

REV: 1

Date: 2018-10-22 11:57 AM

Sheet: 1/1