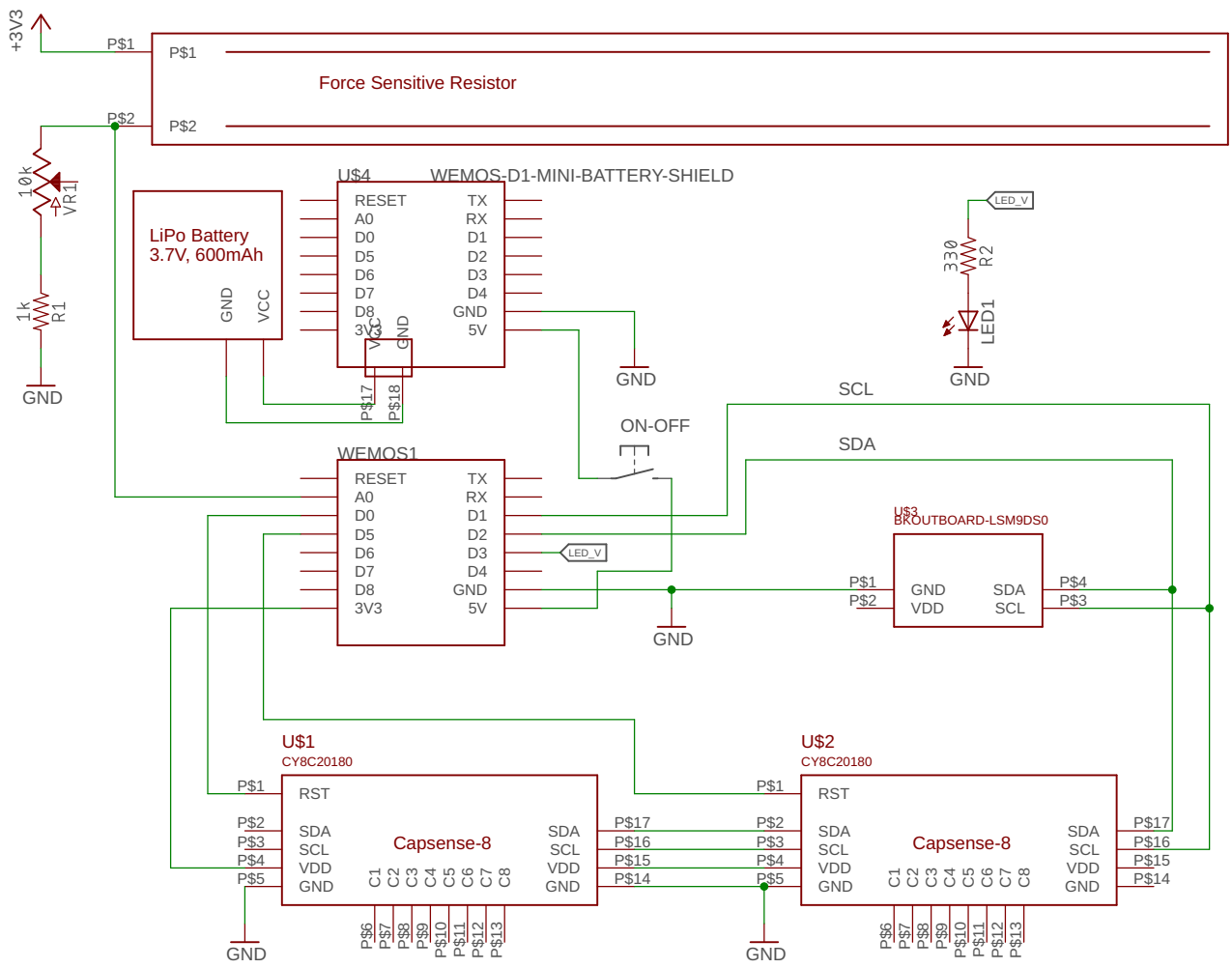

Author: Alex Nieva
IDMIL

TITLE: Sopranino2GW-181

Document Number: 1

REV: 1

Date: 2018-07-02 4:57 PM

Sheet: 1/1