Order No. PHAAM0810057C2

Service Manual

Air Conditioner

CS-PW24JKE CU-PW24JKE

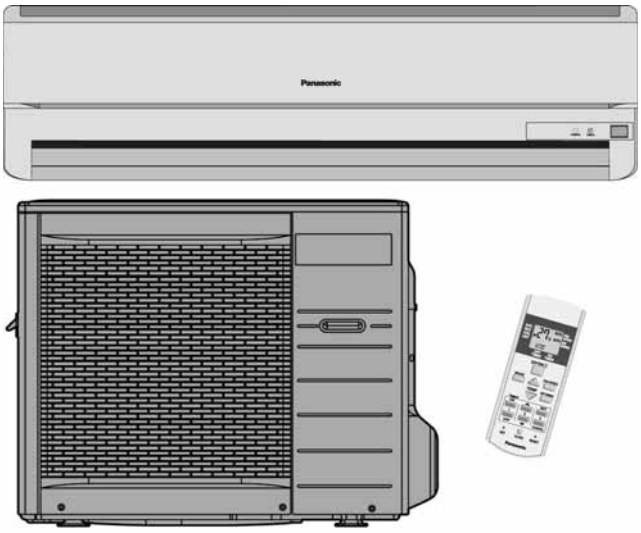

⚠ WARNING

This service information is designed for experienced repair technicians only and is not designed for use by the general public.
It does not contain warnings or cautions to advise non-technical individuals of potential dangers in attempting to service a product.
Products powered by electricity should be serviced or repaired only by experienced professional technicians. Any attempt to service or repair the product or products dealt with in this service information by anyone else could result in serious injury or death.

⚠ PRECAUTION OF LOW TEMPERATURE

In order to avoid frostbite, be assured of no refrigerant leakage during the installation or repairing of refrigeration circuit.

TABLE OF CONTENTS

PAGE

1 Safety Precautions ---------- **3**
2 Specifications ---------- **5**
3 Features ---------- **8**
4 Location of Controls and Components ---------- **9**
4.1. Indoor Unit ---------- 9
4.2. Outdoor Unit ---------- 9
4.3. Remote Control ---------- 9
5 Dimensions ---------- **10**
5.1. Indoor Unit & Remote Control ---------- 10
5.2. Outdoor Unit ---------- 11
6 Refrigeration Cycle Diagram ---------- **12**
7 Block Diagram ---------- **13**
8 Wiring Connection Diagram ---------- **14**
9 Electronic Circuit Diagram ---------- **15**
9.1. Indoor Unit ---------- 15
9.2. Outdoor Unit ---------- 15
10 Printed Circuit Board ---------- **16**

PAGE

10.1. Indoor Unit ---------- 16
10.2. Outdoor Unit ---------- 17
10.3. Indicator & Receiver ---------- 17
11 Installation Instruction ---------- **18**
11.1. Select The Best Location ---------- 18
11.2. Indoor/Outdoor Unit Installation Diagram ---------- 18
11.3. Indoor Unit ---------- 19
11.4. Outdoor Unit ---------- 22
12 Operation And Function ---------- **24**
12.1. Heating Operation ---------- 24
12.2. Cooling Operation ---------- 25
12.3. Soft Dry Operation ---------- 26
12.4. Automatic Operation ---------- 27
12.5. Operation Control ---------- 28
12.6. Indoor Fan Speed Control ---------- 33
12.7. Outdoor Fan Speed Control ---------- 35
12.8. Vertical Airflow Direction Control ---------- 35

Panasonic®

© Panasonic HA Air-Conditioning (M) Sdn. Bhd. 2008.
Unauthorized copying and distribution is a violation of law.

12.9. Timer Control ---------- 36
12.10. Random Auto Restart Control ---------- 36
12.11. Remote Control Signal Receiving Sound ---------- 36
13 Servicing Mode ---------- 37
13.1. Auto OFF/ON Button ---------- 37
14 Troubleshooting Guide ---------- 38
14.1. Refrigeration Cycle System ---------- 38
14.2. Relationship Between The Condition Of The Air Conditioner And Pressure And Electric Current ---------- 39
14.3. Diagnosis Methods Of A Malfunction Of A Compressor And 4-way Valve ---------- 39
15 Disassembly and Assembly Instructions ---------- 40
15.1. Indoor Electronic Controllers and Control Board Removal Procedures ---------- 40
16 Technical Data ---------- 46
16.1. Thermostat Characteristics ---------- 46
16.2. Sensible Capacity Chart ---------- 47
16.3. Operation Characteristics ---------- 48
17 Exploded View and Replacement Parts List ---------- 52
17.1. Indoor Unit ---------- 52
17.2. Outdoor Unit ---------- 54

1. Safety Precautions

- Read the following “SAFETY PRECAUTIONS” carefully before perform any servicing.
- Electrical work must be installed or serviced by a licensed electrician. Be sure to use the correct rating of the power plug and main circuit for the model installed.
- The caution items stated here must be followed because these important contents are related to safety. The meaning of each indication used is as below. Incorrect installation or servicing due to ignoring of the instruction will cause harm or damage, and the seriousness is classified by the following indications.

WARNING	This indication shows the possibility of causing death or serious injury.
CAUTION	This indication shows the possibility of causing injury or damage to properties.

- The items to be followed are classified by the symbols:

	This symbol denotes item that is PROHIBITED from doing.

- Carry out test running to confirm that no abnormality occurs after the servicing. Then, explain to user the operation, care and maintenance as stated in instructions. Please remind the customer to keep the operating instructions for future reference.

WARNING
1. Do not modify the machine, part, material during repairing service.
2. If wiring unit is supplied as repairing part, do not repair or connect the wire even only partial wire break. Exchange the whole wiring unit.
3. Do not wrench the fasten terminal. Pull it out or insert it straightly.
4. Engage dealer or specialist for installation and servicing. If installation of servicing done by the user is defective, it will cause water leakage, electrical shock or fire.
5. Install according to this installation instructions strictly. If installation is defective, it will cause water leakage, electric shock or fire.
6. Use the attached accessories parts and specified parts for installation and servicing. Otherwise, it will cause the set to fall, water leakage, fire or electrical shock.
7. Install at a strong and firm location which is able to withstand the set’s weight. If the strength is not enough or installation is not properly done, the set will drop and cause injury.
8. For electrical work, follow the local national wiring standard, regulation and the installation instruction. An independent circuit and single outlet must be used. If electrical circuit capacity is not enough or defect found in electrical work, it will cause electrical shock or fire.
9. This equipment is strongly recommended to install with Earth Leakage Circuit Breaker (ELCB) or Residual Current Device (RCD). Otherwise, it may cause electrical shock and fire in case equipment breakdown or insulation breakdown.
10. Do not use joint cable for indoor / outdoor connection cable. Use the specified indoor / outdoor connection cable, refer to installation instruction CONNECT THE CABLE TO THE INDOOR UNIT and connect tightly for indoor / outdoor connection. Clamp the cable so that no external force will be acted on the terminal. If connecting or fixing is not perfect, it will cause heat up or fire at the connection.
11. Wire routing must be properly arranged so that control board cover is fixed properly. If control board cover is not fixed perfectly, it will cause heat-up or fire at the connection point of terminal, fire or electrical shock.
12. When install or relocate air conditioner, do not let any substance other than the specified refrigerant, eg. air etc. mix into refrigeration cycle (piping). (Mixing of air etc. will cause abnormal high pressure in refrigeration cycle and result in explosion, injury etc.).
13. Do not install outdoor unit near handrail of veranda. When installing air-conditioner unit at veranda of high rise building, child may climb up to outdoor unit and cross over the handrail and causing accident.
14. This equipment must be properly earthed. Earth line must not be connected to gas pipe, water pipe, earth of lightning rod and telephone. Otherwise, it may cause electric shock in case equipment breakdown or insulation breakdown.
15. Keep away from small children, the thin film may cling to nose and mouth and prevent breathing.
16. Do not use unspecified cord, modified cord, joint cord or extension cord for power supply cord. Do not share the single outlet with other electrical appliances. Poor contact, poor insulation or over current will cause electrical shock or fire.
17. Tighten the flare nut with torque wrench according to specified method. If the flare nut is over-tightened, after a long period, the flare may break and cause refrigerant gas leakage.
18. During pump down operation, stop the compressor before remove the refrigeration piping. (Removal of compressor while compressor is operating and valves are opened will cause suck-in of air, abnormal high pressure in refrigeration cycle and result in explosion, injury etc.)
19. During installation, install the refrigerant piping properly before run the compressor. (Operation of compressor without fixing refrigeration piping and valves at opened condition will caused suck-in of air, abnormal high pressure in refrigeration cycle and result in explosion, injury, etc).

WARNING
20. After completion of installation or service, confirm there is no leakage or refrigerant gas. It may generate toxic gas when the refrigerant contacts with fire.
21. Ventilate if there is refrigerant gas leakage during operation. It may cause toxic gas when refrigerant contacts with fire.
22. Do not insert your fingers or other objects into the unit, high speed rotating fan may cause injury.
23. Must not use other parts except original parts described in catalog and manual.

CAUTION
1. Do not install the unit at place where leakage of flammable gas may occur. In case gas leaks and accumulates at surrounding of the unit, it may cause fire.
2. Carry out drainage piping as mentioned in installation instructions. If drainage is not perfect, water may enter the room and damage the furniture.
3. Tighten the flare nut with torque wrench according to specified method. If the flare nut is over-tightened, after a long period, the flare may break and cause refrigerant gas leakage.
4. Do not touch outdoor unit air inlet and aluminium fin. It may cause injury.
5. Select an installation location which is easy for maintenance.
6. Pb free solder has a higher melting point than standard solder; typically the melting point is 50°F – 70°F (30°C – 40°C) higher. Please use a high temperature solder iron. In case of the soldering iron with temperature control, please set it to 700 ± 20°F (370 ± 10°C). Pb free solder will tend to splash when heated too high (about 1100°F / 600°C).
7. Power supply connection to the air conditioner. Connect the power supply cord of the air conditioner to the mains using one of the following methods. Power supply point shall be the place where there is ease for access for the power disconnection in case of emergency. In some countries, permanent connection of this room air conditioner to the power supply is prohibited. i. Power supply connection to the receptacle using a power plug. Use an approved 15/16A (1.0~1.5HP) or 16A (2.0HP) or 20A (2.5HP) power plug with earth pin for the connection to the socket. ii. Power supply connection to a circuit breaker for the permanent component. Use an approved 15/16A (1.0~1.5HP) or 20A (2.5HP) circuit breaker for the permanent connection. It must be a double pole switch with a minimum 3.0 mm contact gap.
8. Do not release refrigerant during piping work for installation, servicing, reinstallation and during repairing a refrigerant parts. Take care of the liquid refrigerant, it may cause frostbite
9. Installation or servicing work: It may need two people to carry out the installation or servicing work.
10. Do not install this appliance in a laundry room or other location where water may drip from the ceiling, etc.
11. Do not sit or step on the unit, you may fall down accidentally.
12. Do not touch the sharp aluminium fin, sharp parts may cause injury.

2 Specifications

MODEL				INDOOR	CS-PW24JKE	
				OUTDOOR	CU-PW24JKE	
Performance Test Condition					EUROVENT	
Power Supply				Phase, Hz	Single, 50	
				V	220	230
Cooling	Capacity			kW	7.01	7.03
				BTU/h	23930	24000
				kJ/h	—	—
	Running Current			A	13.1	13.1
	Input Power			W	2730	2780
	Annual Consumption			kWh	—	1390
	EER			W/W	—	—
				BTU/hW	8.76	8.63
	Power Factor			%	95	92
	Indoor Noise (H / L / QLo)			dB-A	High : 47 Low : 41	High : 47 Low : 41
				Power Level dB	59	59
	Outdoor Noise (H / L)			dB-A	High : 54 Low : -	High : 54 Low : -
				Power Level dB	69	69
Heating	Capacity			kW	7.40	7.50
				BTU/h	25260	25600
				kJ/h	—	—
	Running Current			A	12.5	12.5
	Input Power			W	2550	2610
	COP			W/W	—	—
				BTU/hW	9.91	9.81
	Power Factor			%	93	91
	Indoor Noise (H / L / QLo)			dB-A	High : 46 Low : 41	High : 46 Low : 41
				Power Level dB	57	57
	Outdoor Noise (H / L)			dB-A	High : 55 Low: -	High : 55 Low: -
				Power Level dB	70	70
Max Current (A) / Max Input Power (W)					15.7 / 3380	
Starting Current (A)					65.0	
Compressor		Type			Rotary (1 cylinder) rolling piston type	
		Motor Type			Induction (2-poles)	
		Output Power		W	2200	
Indoor Fan	Type				Cross-flow Fan	
	Material				ASHT-18	
	Motor Type				Transistor (8-poles)	
	Input Power			W	—	
	Output Power			W	30	
	Speed	QLo	Cool	rpm	—	
			Heat	rpm	—	
		Lo	Cool	rpm	1380	1380
			Heat	rpm	1280	1280
		Me	Cool	rpm	1480	1480
			Heat	rpm	1480	1480
		Hi	Cool	rpm	1630	1630
			Heat	rpm	1570	1570
		SHi	Cool	rpm	—	—
			Heat	rpm	1630	1630

Outdoor Fan	Type			Propeller Fan	
	Material			PP Resin	
	Motor Type			Induction (6-poles)	
	Input Power		W	138.3 - 150.3	
	Output Power		W	80	
	Speed	Lo	rpm	460 - 490	
		Hi	rpm	815 - 830	
Moisture Removal			L/h (Pt/h)	4.0 (8.5)	
Indoor Airflow	Lo	Cool	m^3/min (ft^3/min)	14.7 (520)	14.7 (520)
		Heat	m^3/min (ft^3/min)	14.8 (524)	14.8 (524)
	Me	Cool	m^3/min (ft^3/min)	15.8 (558)	15.8 (558)
		Heat	m^3/min (ft^3/min)	17.2 (606)	17.2 (606)
	Hi	Cool	m^3/min (ft^3/min)	17.4 (610)	17.4 (610)
		Heat	m^3/min (ft^3/min)	18.2 (640)	18.2 (640)
	SHi	Cool	m^3/min (ft^3/min)	—	—
		Heat	m^3/min (ft^3/min)	18.9 (667)	18.9 (667)
Outdoor Airflow	Hi	Cool	m^3/min (ft^3/min)	51.4 (1820)	51.7 (1830)
		Heat	m^3/min (ft^3/min)	—	—
Refrigerant Cycle	Control Device			Capillary Tube	
	Refrigerant Oil		cm^3	RB68A or Freol Alpha 68M (1130)	
	Refrigerant Type		g (oz)	R410A, 1820 (64.2)	
Dimension	Height (I/D / O/D)		mm (inch)	275 (10 - 13/16) / 750 (29 - 17/32)	
	Width (I/D / O/D)		mm (inch)	998 (39 - 9/32) / 875 (34 - 15/32)	
	Depth (I/D / O/D)		mm (inch)	230 (9 - 1/16) / 345 (13 - 19/32)	
Weight	Net (I/D / O/D)		kg (lb)	11.0 (24) / 63.0 (139)	
Piping	Pipe Diameter (Liquid / Gas)		mm (inch)	6.35 (1/4) / 15.88 (5/8)	
	Standard Length		m (ft)	5.0 (16.4)	
	Length Range (min - max)		m (ft)	3 (9.8) ~ 25 (82.0)	
	I/D & O/D Height Different		m (ft)	20 (65.6)	
	Additional Gas Amount		g/m (oz/ft)	30 (0.3)	
	Length for Additional Gas		m (ft)	7.5 (24.6)	
Drain Hose	Inner Diameter		mm	16	
	Length		mm	650	
Indoor Heat Exchanger	Fin Material			Aluminium (Pre Coat)	
	Fin Type			Slit Fin	
	Row x Stage x FPI			2 x 15 x 21	
	Size (W x H x L)		mm	25.4 x 315 x 810	
Outdoor Heat Exchanger	Fin Material			Aluminium (Pre Coat)	
	Fin Type			Corrugated Fin	
	Row x Stage x FPI			2 x 28 x 16	
	Size (W x H x L)		mm	44 x 711.2 x 827.7 862.2	
Air Filter	Material			P.P Honey Comb	
	Type			One-touch	
Power Supply				Indoor Power Supply	
Power Supply Cord			A	20	
Thermostat				—	
Protection Device				—	
				Dry Bulb	Wet Bulb
Indoor Operation Range		Cooling	Maximum	32	23
			Minimum	16	11
		Heating	Maximum	30	—
			Minimum	16	—

Outdoor Operation Range	Cooling	Maximum	43	26
		Minimum	16	11
	Heating	Maximum	24	18
		Minimum	-5	-6

1. Cooling capacities are based on indoor temperature of 27°C Dry Bulb (80.6°F Dry Bulb), 19.0°C Wet Bulb (66.2°F Wet Bulb) and outdoor air temperature of 35°C Dry Bulb (95°F Dry Bulb), 24°C Wet Bulb (75.2°F Wet Bulb)
2. Heating capacities are based on indoor temperature of 20°C Dry Bulb (68°F Dry Bulb) and outdoor air temperature of 7°C Dry Bulb (44.6°F Dry Bulb), 6°C Wet Bulb (42.8°F Wet Bulb)
3. Heating low temperature capacity, Input Power and COP measured at 230 V, indoor temperature 20°C, outdoor 2/1°C
4. Heating extreme low temperature capacity, Input Power and COP measured at 230 V, indoor temperature 20°C, outdoor -7/-8°C
5. Specifications are subjected to change without prior notice for further improvement.

3 Features

- High efficiency.
- Compact design.
- Wider range of horizontal discharge air.
- Air filter with function to reduce dust and smoke.
- Automatic air swing and manual adjusted by Remote Control for vertical airflow.
- Long installation piping up to 25 meter.

- **Quality Improvement**
  - Random auto restart after power failure for safety restart operation.
  - Gas leakage detection.
  - Prevent Compressor reverse cycle.
  - Inner protector to protect Compressor.
  - Noise prevention during soft dry operation.
  - Pre coated Condenser for high resistance to corrosion.
  - Overload protection control (Heating)
  - Outdoor fan control.
  - Compressor high pressure control.

- **Serviceability Improvement**
  - Removable and washable Front Panel.

- **Environmental Protection**
  - Non-ozone depletion substances refrigerant (R410A)

- **Operation Improvement**
  - 24-hour timer setting.

4 Location of Controls and Components

4.1. Indoor Unit

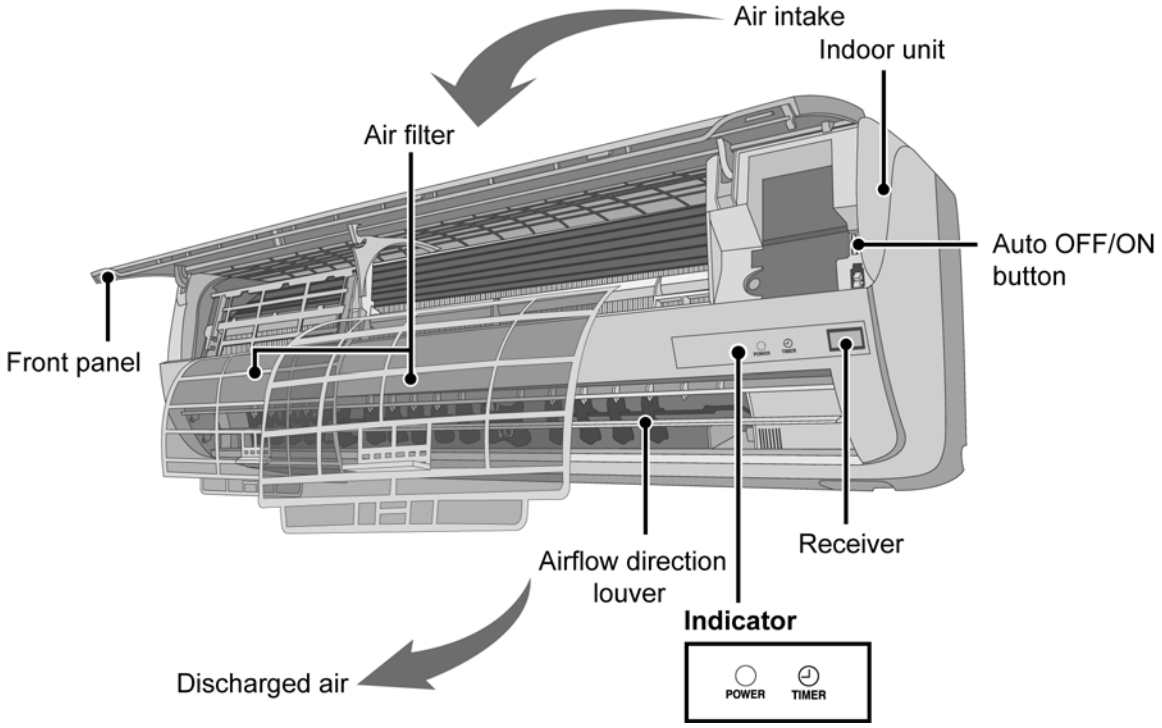

4.2. Outdoor Unit

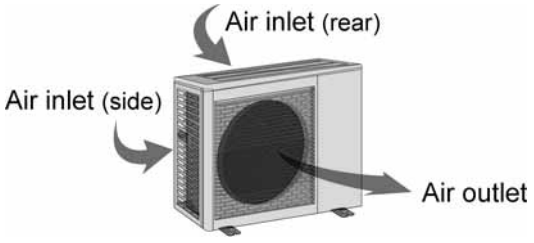

4.3. Remote Control

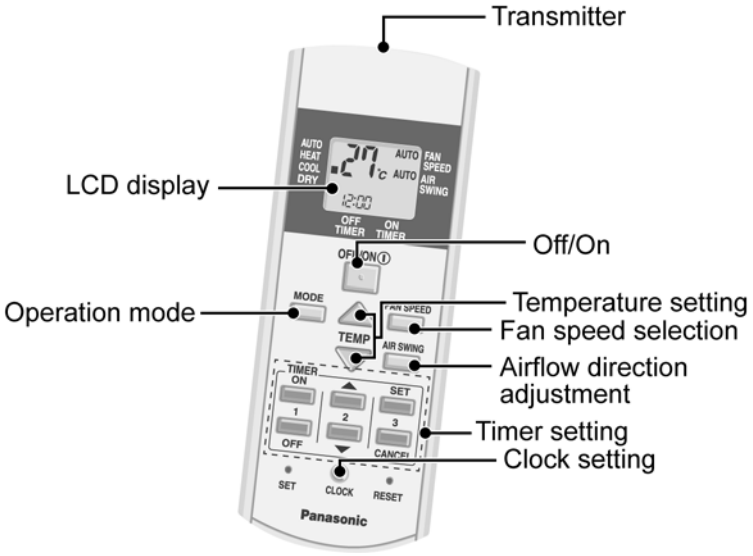

5 Dimensions

5.1. Indoor Unit & Remote Control

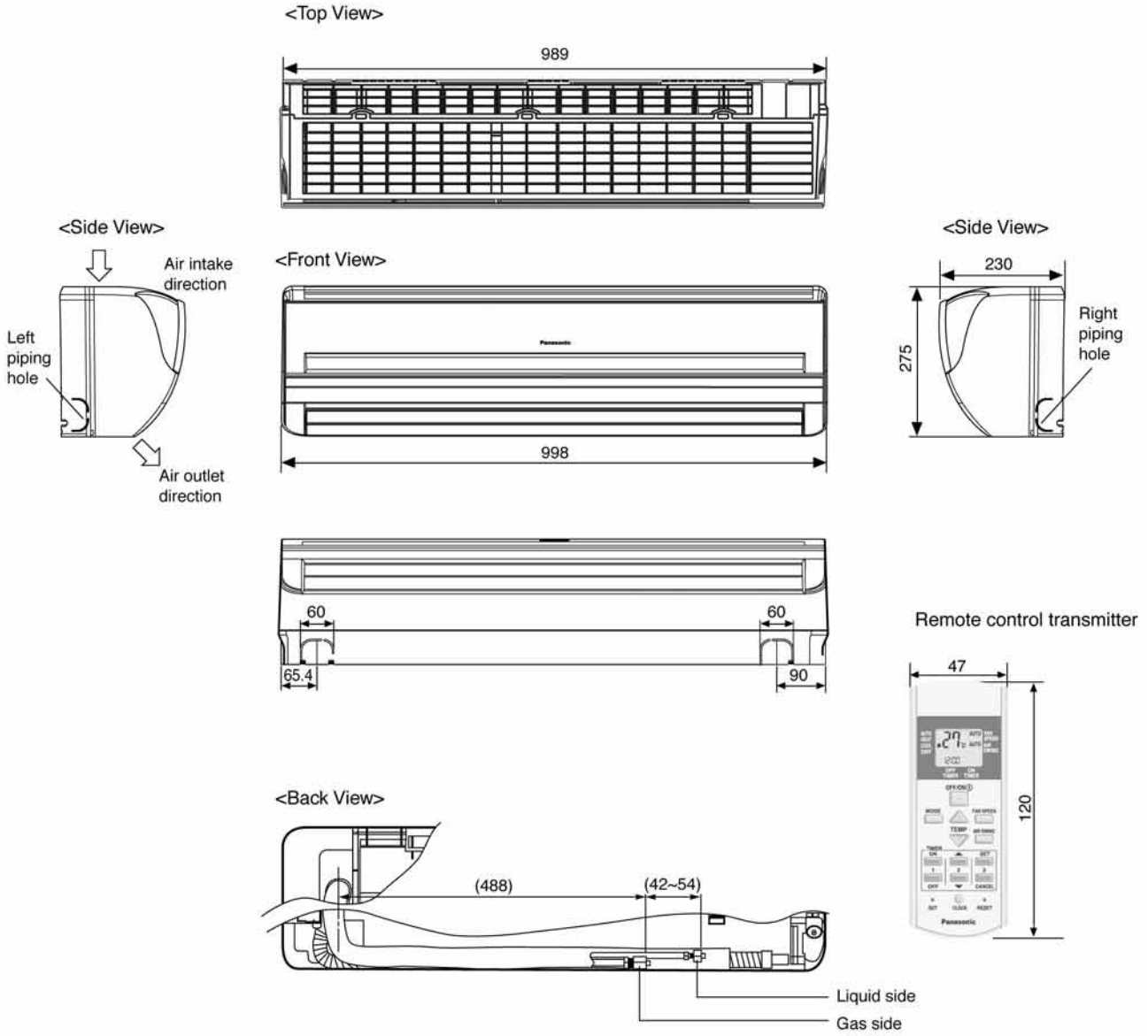

Relative position between the indoor unit and the installation plate <Front View>

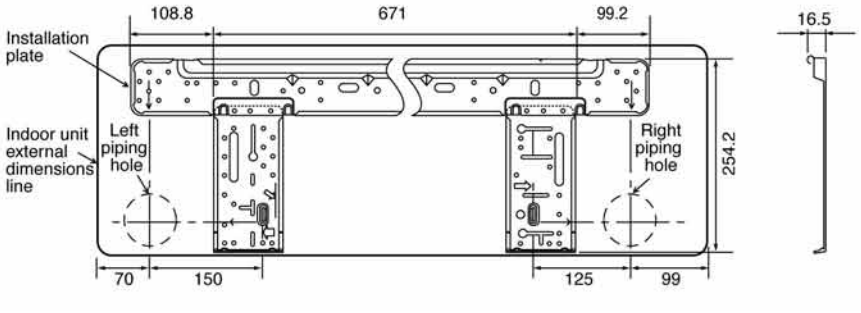

Unit : mm

5.2. Outdoor Unit

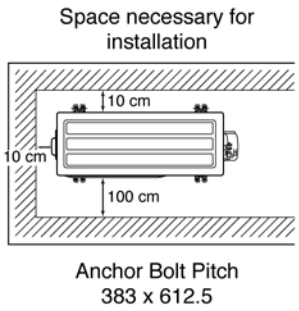

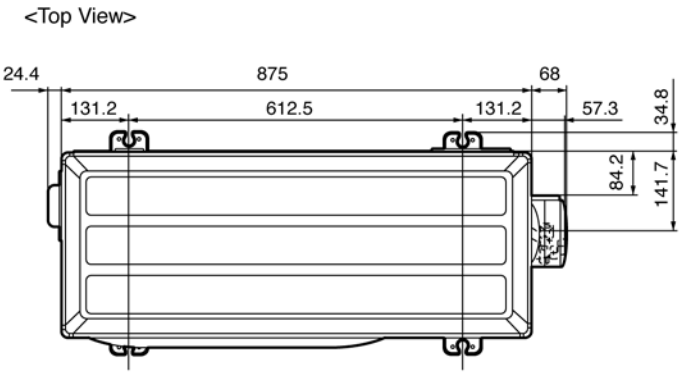

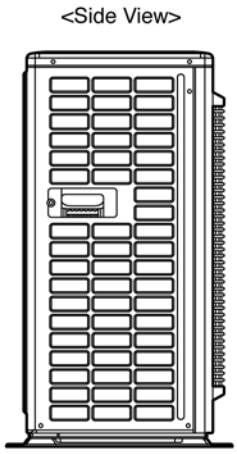

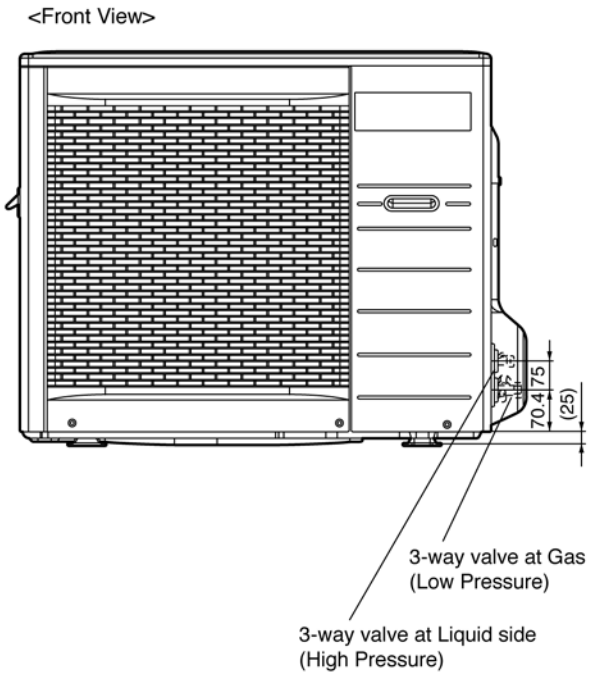

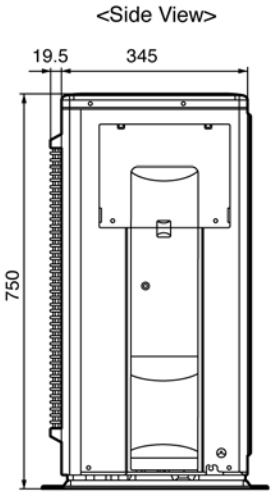

Unit: mm

6 Refrigeration Cycle Diagram

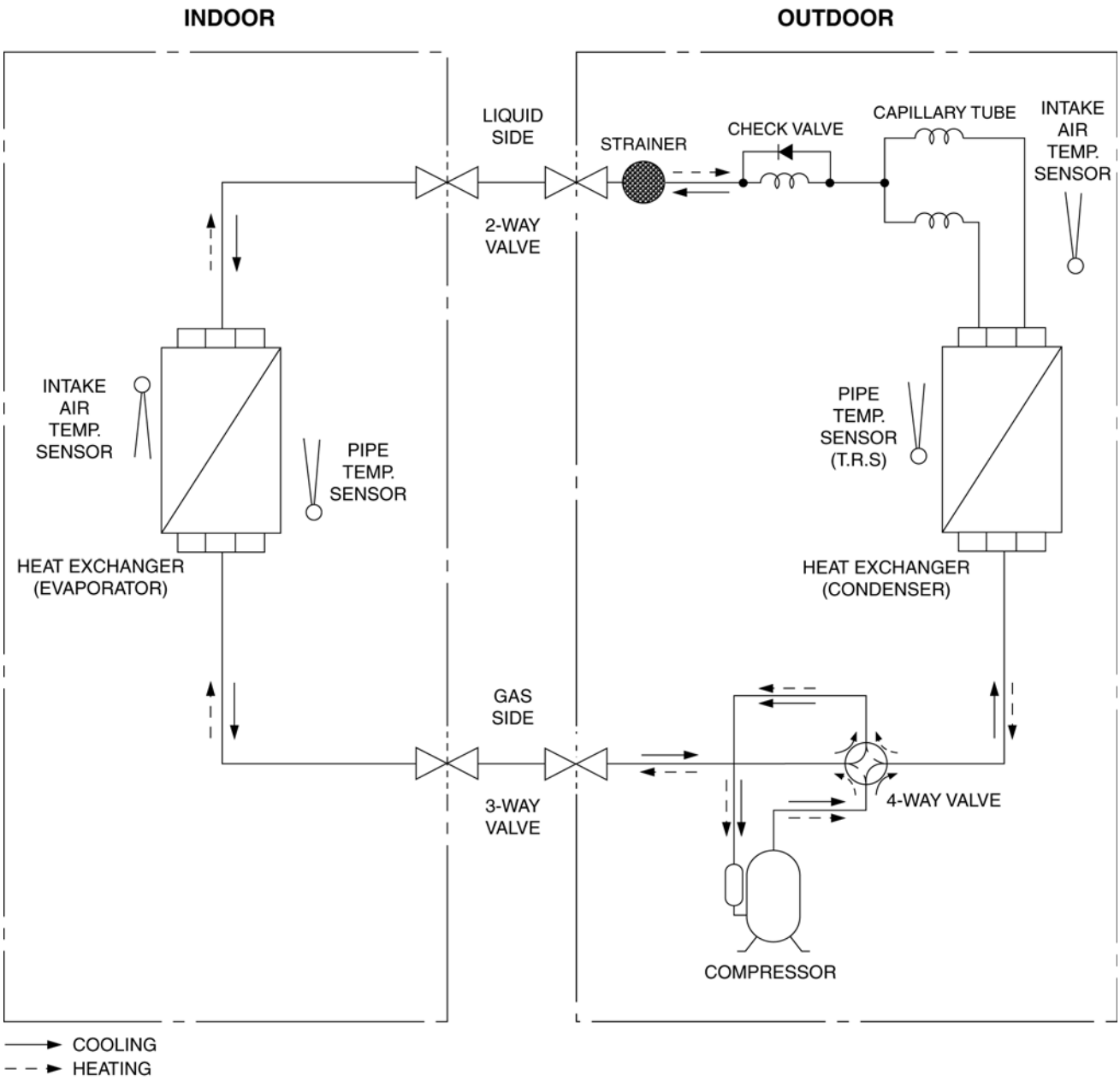

7 Block Diagram

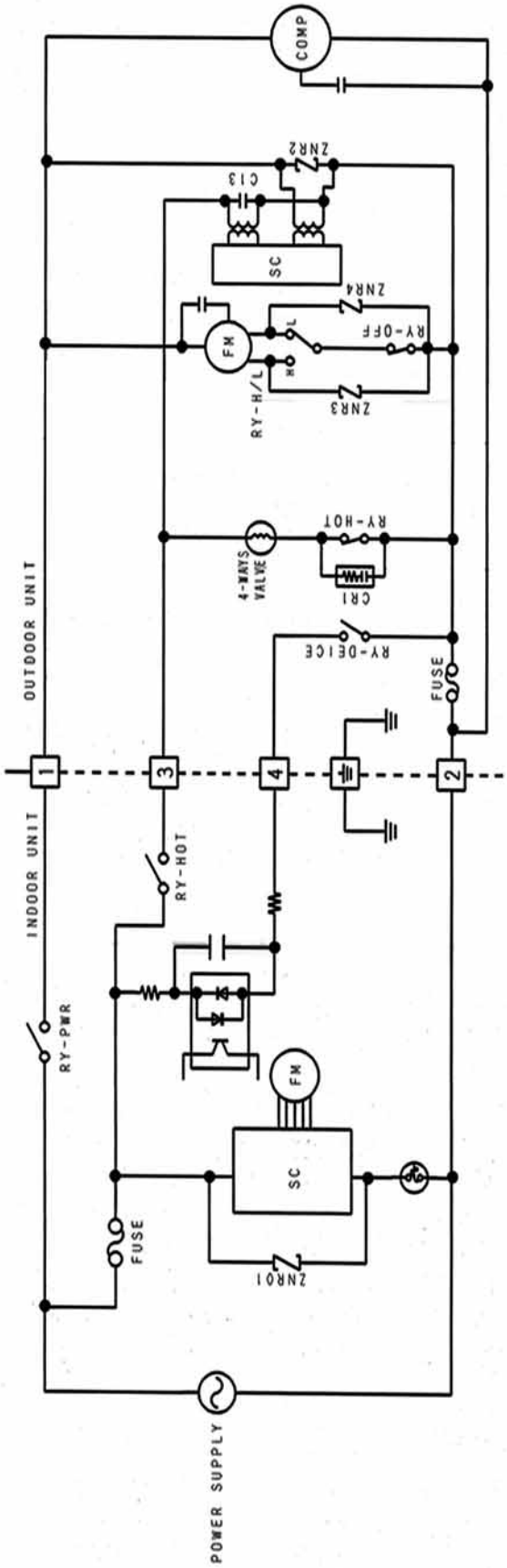

8 Wiring Connection Diagram

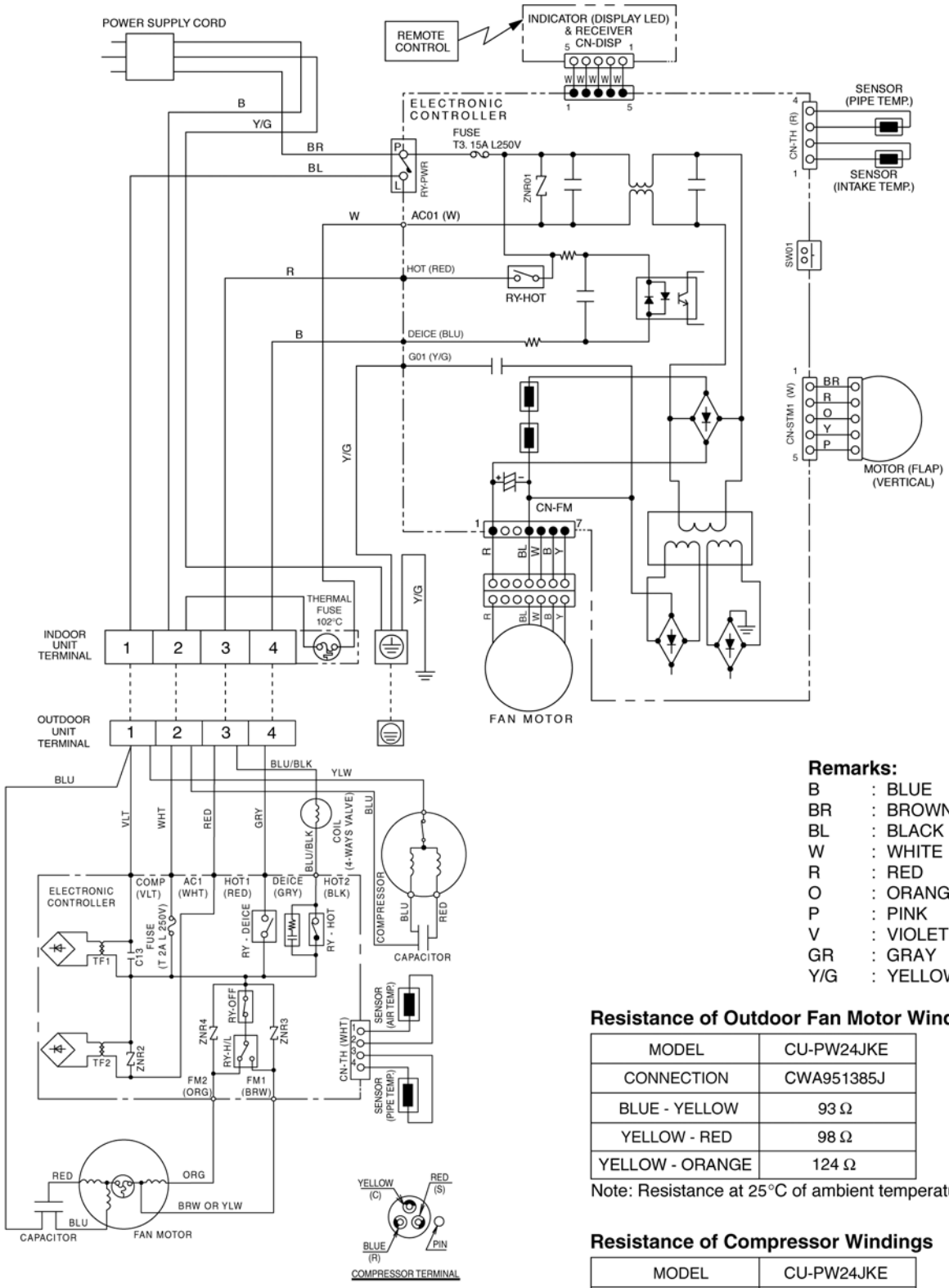

Remarks:

B	:	BLUE
BR	:	BROWN
BL	:	BLACK
W	:	WHITE
R	:	RED
O	:	ORANGE
P	:	PINK
V	:	VIOLET
GR	:	GRAY
Y/G	:	YELLOW / GREEN

Resistance of Outdoor Fan Motor Windings

MODEL	CU-PW24JKE
CONNECTION	CWA951385J
BLUE - YELLOW	93 Ω
YELLOW - RED	98 Ω
YELLOW - ORANGE	124 Ω

Note: Resistance at 25°C of ambient temperature.

Resistance of Compressor Windings

MODEL	CU-PW24JKE
CONNECTION	5JS315DAA21
C - R	0.830 Ω
C - S	2.257 Ω

Note: Resistance at 20°C of ambient temperature.

9 Electronic Circuit Diagram

9.1. Indoor Unit

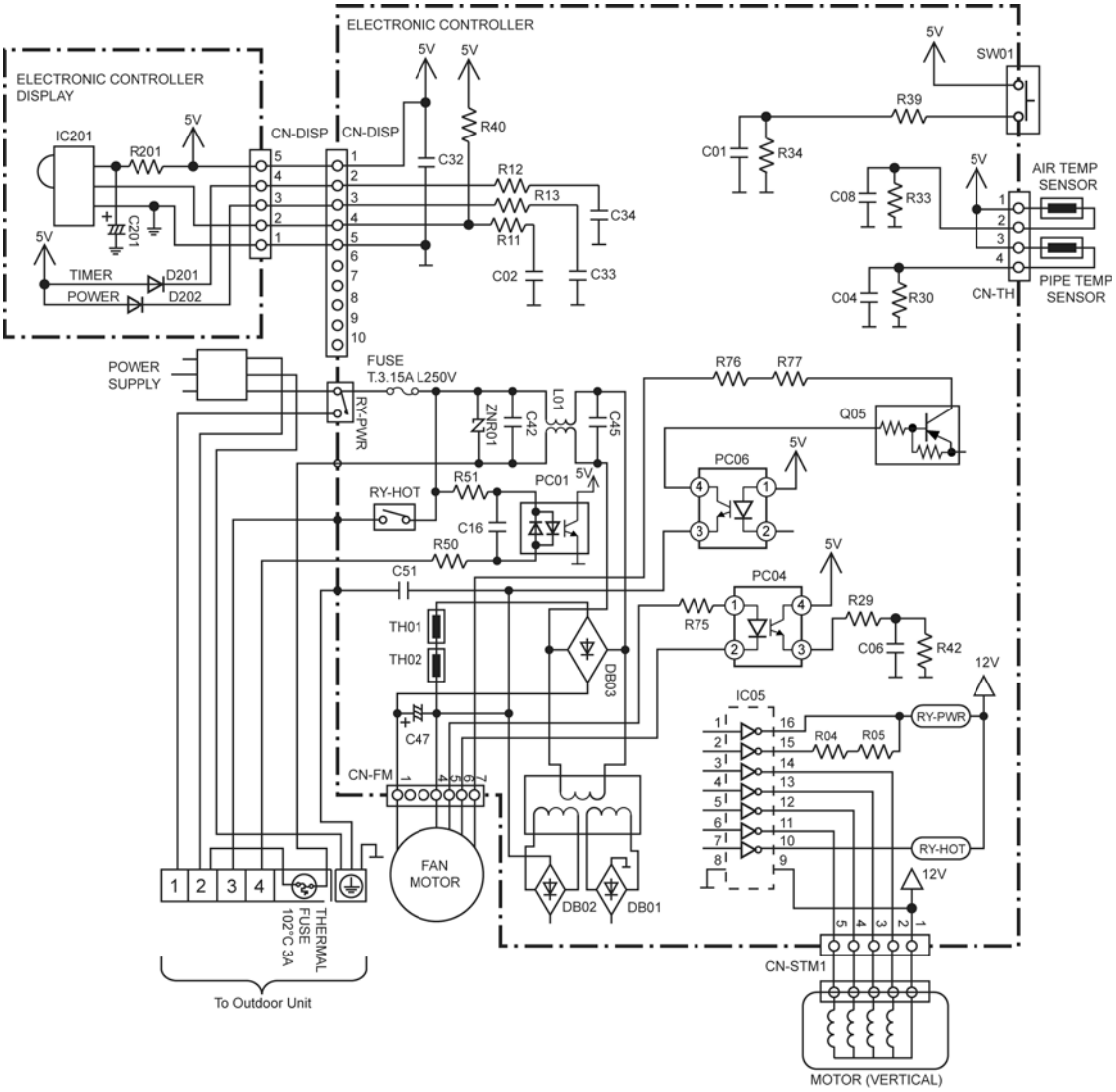

9.2. Outdoor Unit

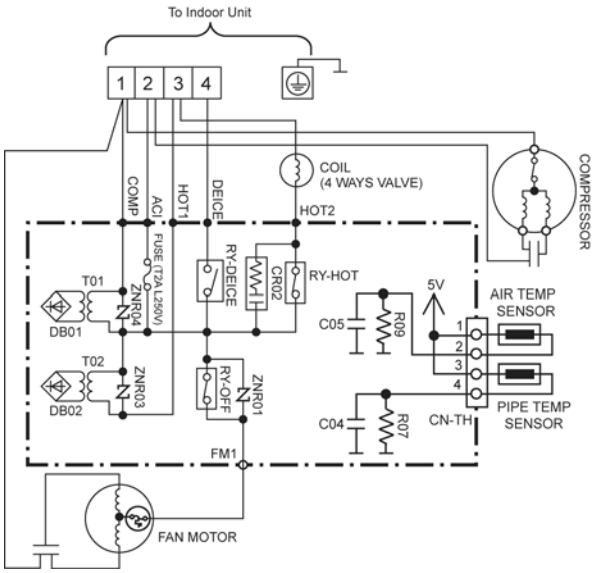

10 Printed Circuit Board

10.1. Indoor Unit

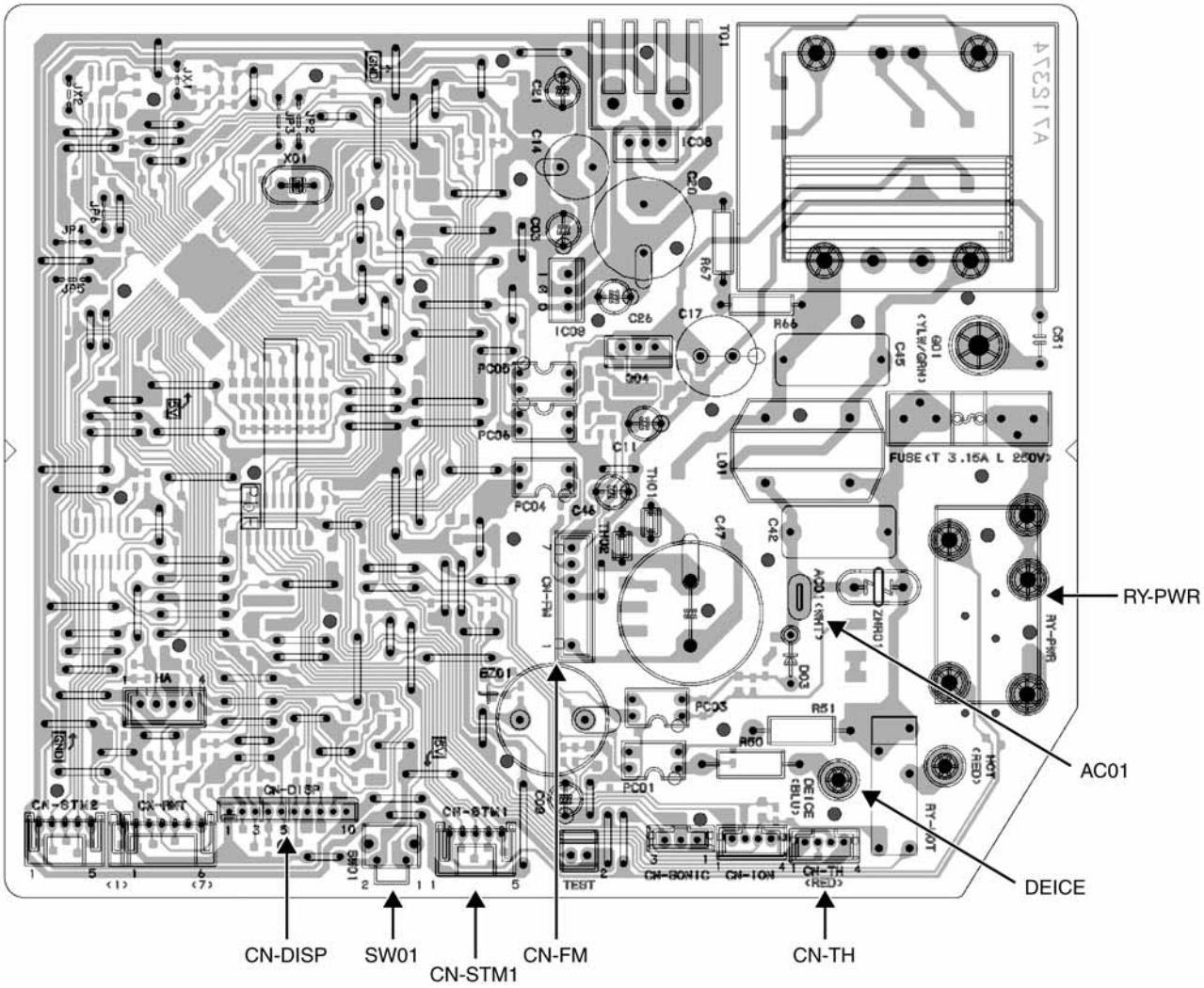

10.2. Outdoor Unit

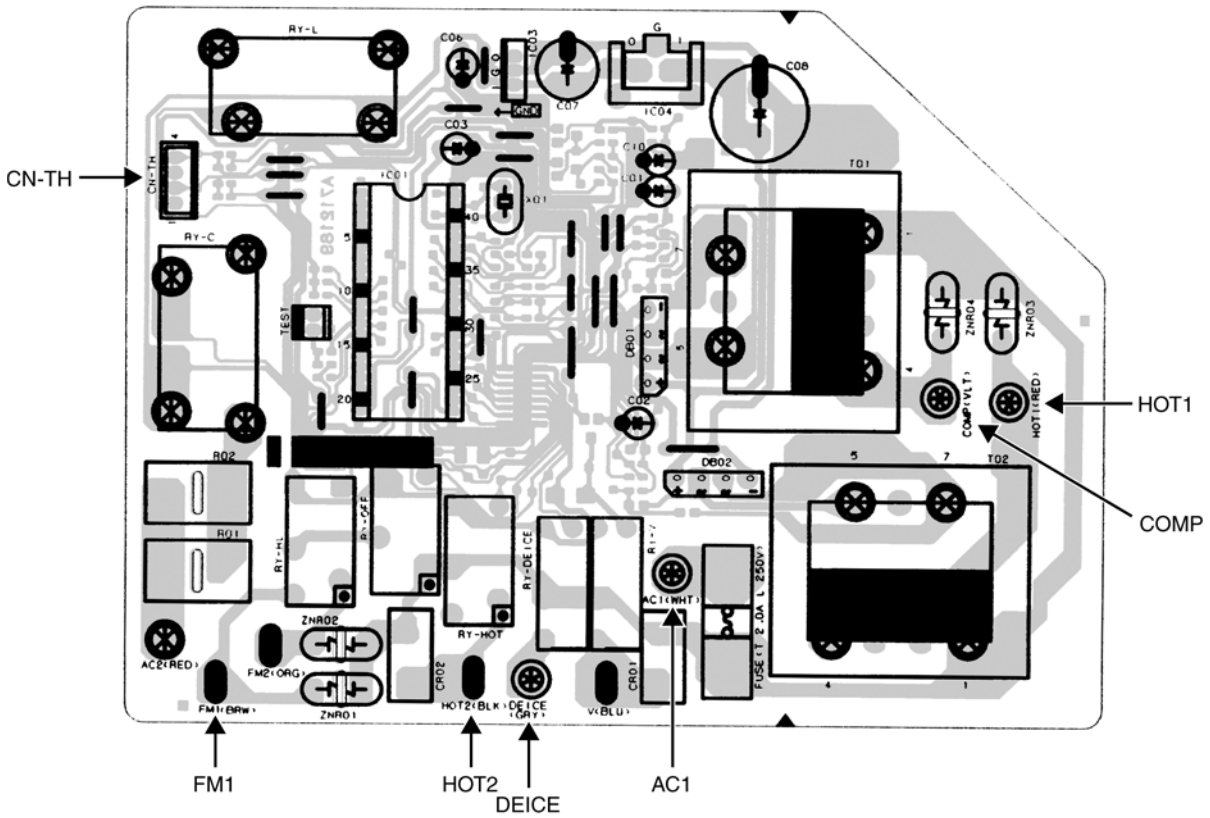

10.3. Indicator & Receiver

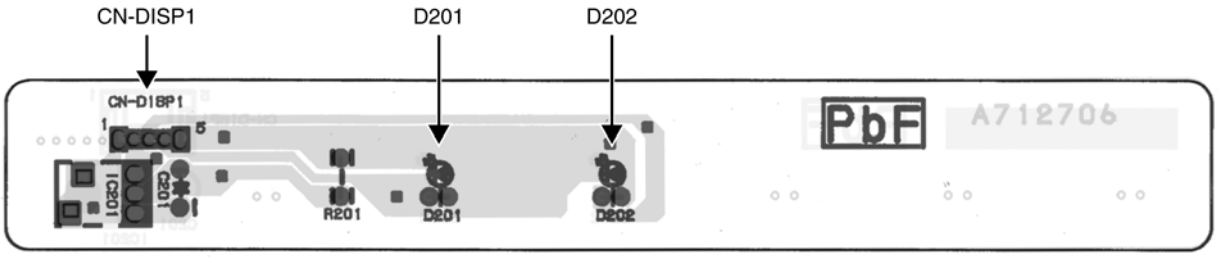

11 Installation Instruction

11.1. Select The Best Location

INDOOR UNIT

- Do not install the unit in excessive oil fume area such as kitchen, workshop and etc.
- There should not be any heat source or steam near the unit.
- There should not be any obstacles blocking the air circulation.
- A place where air circulation in the room is good.
- A place where drainage can be easily done.
- A place where noise prevention is taken into consideration.
- Do not install the unit near the door way.
- Ensure the spaces indicated by arrows from the wall, ceiling, fence or other obstacles.
- Recommended installation height for indoor unit shall be at least 2.5 m.

OUTDOOR UNIT

- If an awning is built over the unit to prevent direct sunlight or rain, be careful that heat radiation from the condenser is not obstructed.
- There should not be any animal or plant which could be affected by hot air discharged.
- Keep the spaces indicated by arrows from wall, ceiling, fence or other obstacles.
- Do not place any obstacles which may cause a short circuit of the discharged air.
- If piping length is over 7.5 m, additional refrigerant should be added as shown in the table.

Model	Piping size		Rated Length (m)	Max. Elevation (m)	Min. Piping Length (m)	Max. Piping Length (m)	Additional Refrigerant (g/m)
	Gas	Liquid					
PW18	1/2”	1/4”	5	20	3	25	20
PW24	5/8”	1/4”	5	20	3	25	30

Example: For PW24

If the unit is installed at 10 m distance, the quantity of additional refrigerant should be 75g ..... (10-7.5)m x 30 g/m = 75 g

11.2. Indoor/Outdoor Unit Installation Diagram

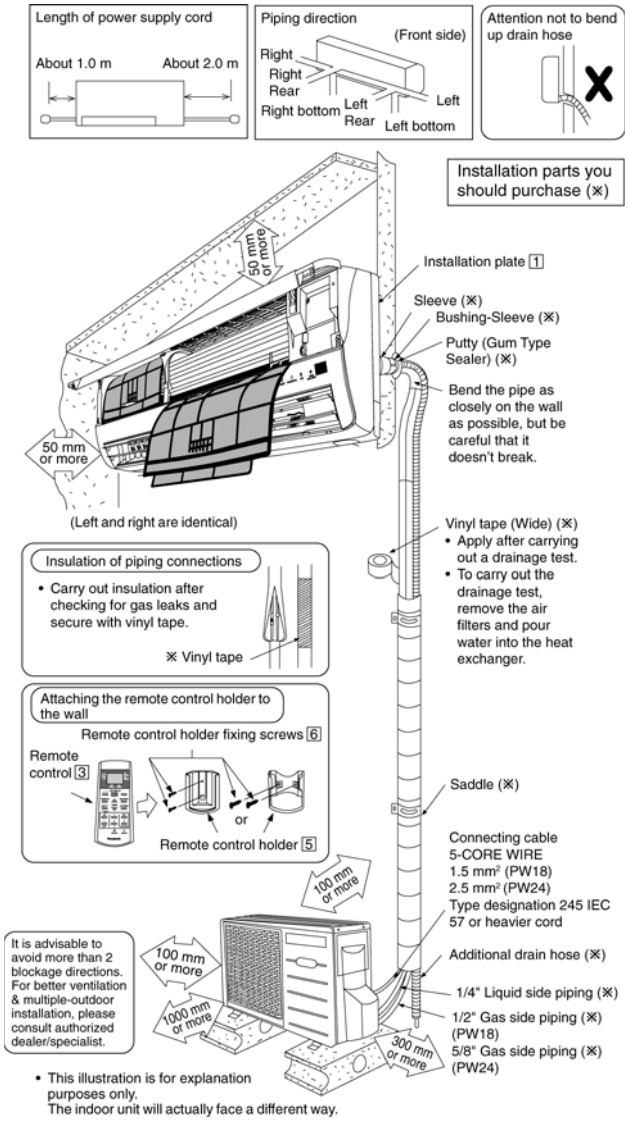

11.3. Indoor Unit

11.3.1. HOW TO FIX INSTALLATION PLATE

The mounting wall is strong and solid enough to prevent it from the vibration.

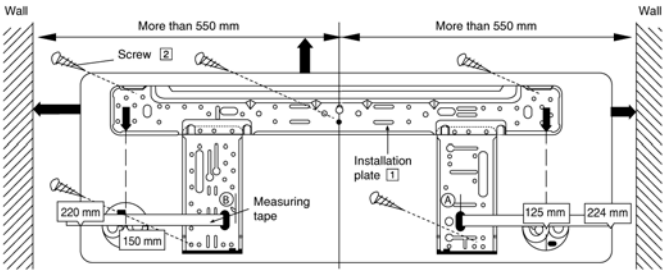

The centre of installation plate should be at more than 550 mm at right and left of the wall.
The distance from installation plate edge to ceiling should more than 67 mm.
From installation plate left edge to unit's left side is 47 mm.
From installation plate right edge to unit's right is 73 mm.

Ⓑ : For left side piping, piping connection for liquid should be about 126 mm from this line.
: For left side piping, piping connection for gas should be about 174 mm from this line.
: For left side piping, piping connection cable should be about 984 mm from this line.

1. Mount the installation plate on the wall with 5 screws or more.
   (If mounting the unit on the concrete wall consider using anchor bolts.)
   - Always mount the installation plate horizontally by aligning the marking-off line with the thread and using a level gauge.

2. Drill the piping plate hole with ø70 mm hole-core drill.
   - Line according to the arrows marked on the lower left and right side of the installation plate. The meeting point of the extended line is the centre of the hole. Another method is by putting measuring tape at position as shown in the diagram above. The hole centre is obtained by measuring the distance namely 150 mm and 125 mm for left and right hole respectively.
   - Drill the piping hole at either the right or the left and the hole should be slightly slanted to the outdoor side.

11.3.2. TO DRILL A HOLE IN THE WALL AND INSTALL A SLEEVE OF PIPING

1. Insert the piping sleeve to the hole.
2. Fix the bushing to the sleeve.
3. Cut the sleeve until it extrudes about 15 mm from the wall.

Caution

When the wall is hollow, please be sure to use the sleeve for tube assembly to prevent dangers caused by mice biting the connecting cable.

4. Finish by sealing the sleeve with putty or caulking compound at the final stage.

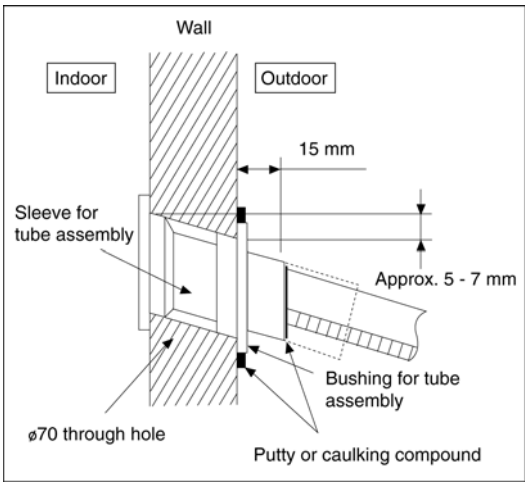

11.3.3. INDOOR UNIT INSTALLATION

1. For the right rear piping

Pull out the Indoor piping
↓
Install the Indoor Unit
↓
Secure the Indoor Unit
↓
Insert the connecting cable

2. For the right and right bottom piping

Pull out the Indoor piping
↓
Install the Indoor Unit
↓
Insert the connecting cable
↓
Secure the Indoor Unit

3. For the embedded piping

Install the indoor unit

Hook the indoor unit onto the upper portion of installation plate. (Engage the indoor unit with the upper edge of the installation plate). Ensure the hooks are properly seated on the installation plate by moving it in left and right.

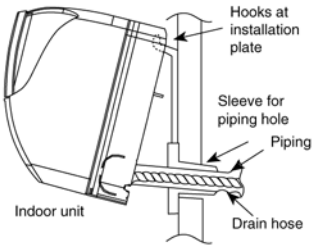

Secure the Indoor Unit

1. Power supply cord arrangement.
   Excess length of power supply cord should be arranged behind the chassis at piping keeping area as shown in the diagram without tying up in a bundle.
   Ensure that the power supply cord is not clamped in between unit's hook (2 position) and installation plate.
   Ensure that the power supply cord is not stretched between chassis back and installation plate. It may create squeak sound.
2. Press the lower left and right side of the unit against the installation plate until hooks engages with their slot (sound click).

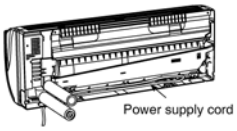

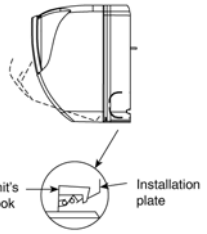

Warning: Do not tie up power supply cord into a bundle by band. It may generate heat and cause fire.

To take out the unit, push the PUSH marking at the bottom unit, and pull it slightly towards you to disengage the hooks from the unit.

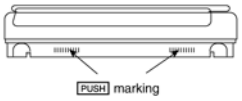

(This can be used for left rear piping & left bottom piping also.)

Pull out the piping and drain hose

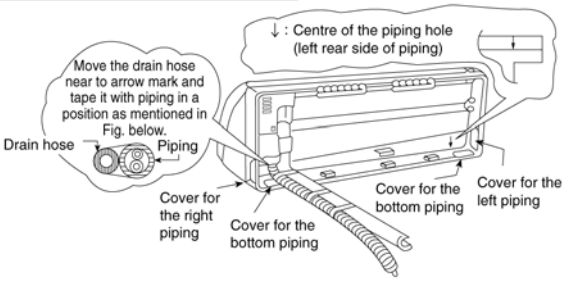

How to keep the cover

In case of the cover is cut, keep the cover at the rear of chassis as shown in the illustration for future reinstallation.

(Left, right and 2 bottom covers for piping.)

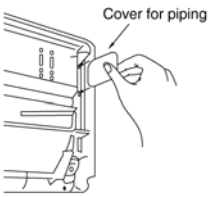

Insert the connecting cable

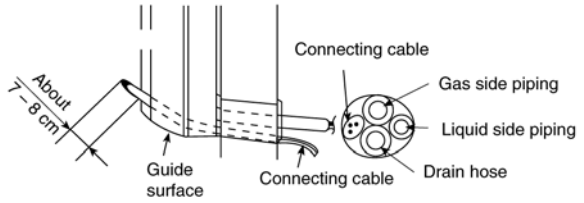

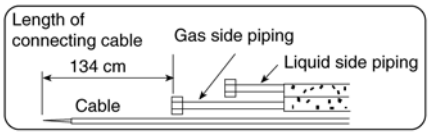

Exchange the drain hose and the cap

Rear view for left piping installation

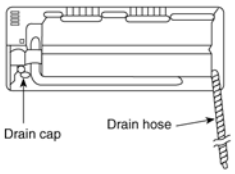

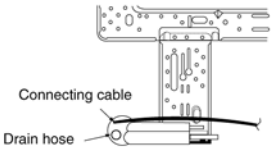

Adjust the piping slightly downwards.

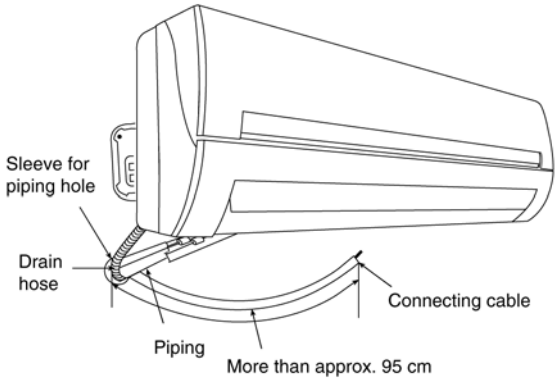

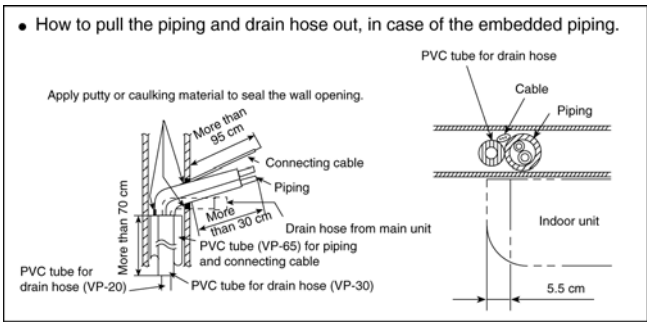

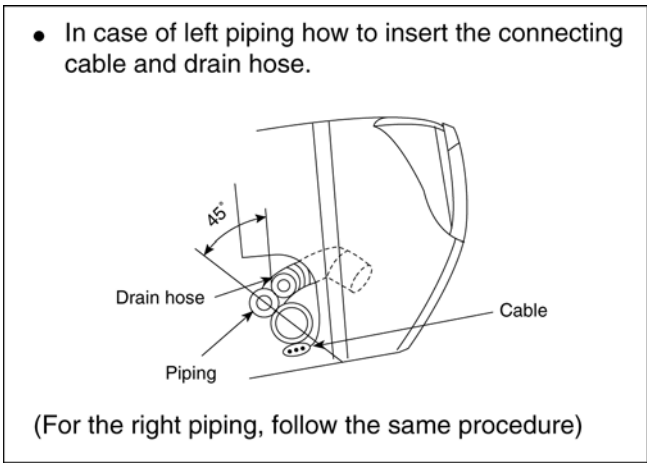

11.3.4. CONNECT THE CABLE TO THE INDOOR UNIT

1. The connecting cable can be connected without removing the front grille.
2. Connecting cable between indoor unit and outdoor unit shall be approved polychloroprene sheathed 5 x 1.5 mm^2 (PW18), 5 x 2.5 mm^2 (PW24) flexible cord, type designation 245 IEC 57 or heavier cord.
   - Ensure the colour of wires of outdoor unit and the terminal Nos. are the same to the indoor's respectively.
   - Earth lead wire shall be longer than the other lead wires as shown in the figure for the electrical safety in case of the slipping out of the cord from the anchorage.

Terminals on the indoor unit	1	2	3	4	⏚
Colour of wires					
Terminals on the outdoor unit	1	2	3	4	⏚

   - Secure the cable onto the control board with the holder (clamper).

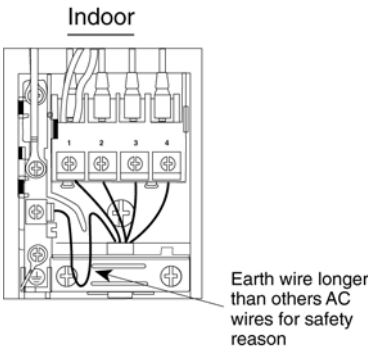

11.3.4.1. WIRE STRIPPING AND CONNECTING REQUIREMENT

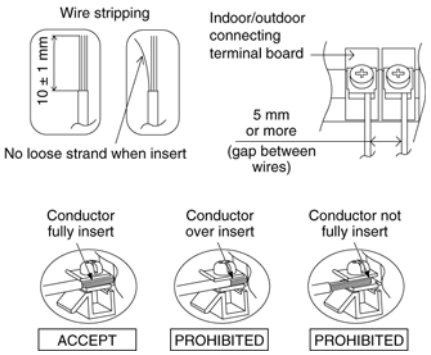

11.4. Outdoor Unit

11.4.1. INSTALL THE OUTDOOR UNIT

- After selecting the best location, start installation according to Indoor/Outdoor Unit Installation Diagram.
  1. Fix the unit on concrete or rigid frame firmly and horizontally by bolt nut (ø10 mm).
  2. When installing at roof, please consider strong wind and earthquake. Please fasten the installation stand firmly with bolt or nails.

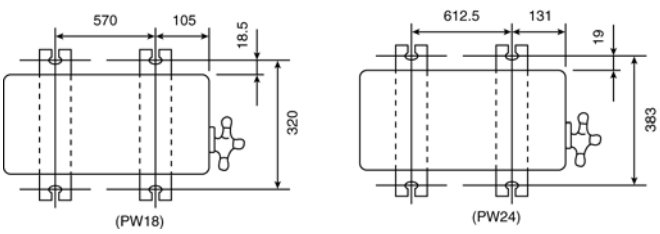

11.4.2. CONNECTING THE PIPING

Connecting The Piping To Indoor Unit

Please make flare after inserting flare nut (locate at joint portion of tube assembly) onto the copper pipe. (in case of using long piping).

Connect the piping

- Align the center of piping and sufficiently tighten the flare nut with fingers.
- Further tighten the flare nut with torque wrench in specified torque as stated in the table.

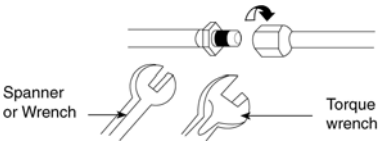

Model	Piping size (Torque)	
	Gas	Liquid
PW18	1/2” [55 N•m]	1/4” [18 N•m)
PW24	5/8” [65 N•m]	1/4” [18 N•m)
⚠ CAUTION Do not over tighten, over tightening cause gas leakage.		

Connecting The Piping To Outdoor Unit

Decide piping length and then cut by using pipe cutter. Remove burrs from cut edge. Make flare after inserting the flare nut (locate at valve) onto the copper pipe.

Align center of piping to valves and then tighten with torque wrench to the specified torque as stated in the table.

CUTTING AND FLARING THE PIPING

1. Please cut using pipe cutter and then remove the burrs.
2. Remove the burrs by using reamer. If burrs is not removed, gas leakage may be caused.
   Turn the piping end down to avoid the metal powder entering the pipe.
3. Please make flare after inserting the flare nut onto the copper pipes.

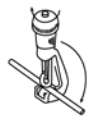

1. To cut

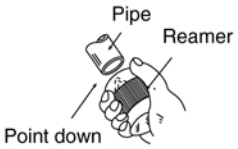

2. To remove burrs

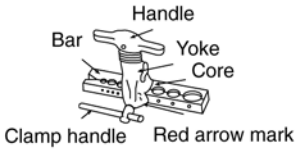

3. To flare

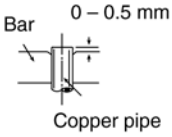

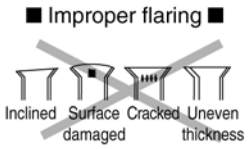

When properly flared, the internal surface of the flare will evenly shine and be of even thickness. Since the flare part comes into contact with the connections, carefully check the flare finish.

11.4.3. EVACUATION OF THE EQUIPMENT

WHEN INSTALLING AN AIR CONDITIONER, BE SURE TO EVACUATE THE AIR INSIDE THE INDOOR UNIT AND PIPES in the following procedure.

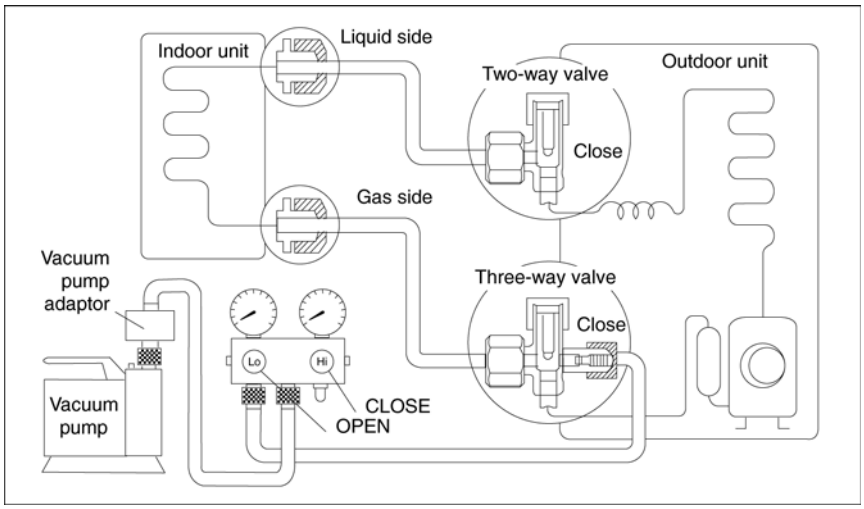

1. Connect a charging hose with a push pin to the Low side of a charging set and the service port of the 3-way valve.
   • Be sure to connect the end of the charging hose with the push pin to the service port.
2. Connect the center hose of the charging set to a vacuum pump with check valve, or vacuum pump and vacuum pump adaptor.
3. Turn on the power switch of the vacuum pump and make sure that the needle in the gauge moves from 0 cmHg (0 MPa) to -76 cmHg (-0.1 MPa). Then evacuate the air approximately ten minutes.
4. Close the Low side valve of the charging set and turn off the vacuum pump. Make sure that the needle in the gauge does not move after approximately five minutes.
   Note: BE SURE TO FOLLOW THIS PROCEDURE IN ORDER TO AVOID REFRIGERANT GAS LEAKAGE.
5. Disconnect the charging hose from the vacuum pump and from the service port of the 3-way valve.
6. Tighten the service port caps of the 3-way valve at a torque of 18 N•m with a torque wrench.
7. Remove the valve caps of both of the 2-way valve and 3-way valve. Position both of the valves to “OPEN” using a hexagonal wrench (4 mm).
8. Mount valve caps onto the 2-way valve and the 3-way valve.
   • Be sure to check for gas leakage.

⚠ **CAUTION**

• If gauge needle does not move from 0 cmHg (0 MPa) to -76 cmHg (-0.1 MPa), in step ③ above take the following measure:
- If the leak stops when the piping connections are tightened further, continue working from step ③.
- If the leak does not stop when the connections are retightened, repair the location of leak.
- Do not release refrigerant during piping work for installation and reinstallation.
- Take care of the liquid refrigerant, it may cause frostbite.

11.4.4. CONNECT THE CABLE TO THE OUTDOOR UNIT

1. Remove the control board cover from the unit by loosening the screw.
2. Connecting cable between indoor unit and outdoor unit shall be approved polychloroprene sheathed 5 x 1.5 mm^2 (PW18), 5 x 2.5 mm^2 (PW24) flexible cord, type designation 245 IEC 57 or heavier cord.

Terminals on the indoor unit	1	2	3	4	⏚
Colour of wires					
Terminals on the outdoor unit	1	2	3	4	⏚

3. Secure the cable onto the control board with the holder (clamper).
4. Attach the control board cover back to the original position with the screw.
5. For wire stripping and connection requirement, refer to instruction ⑤ of indoor unit.

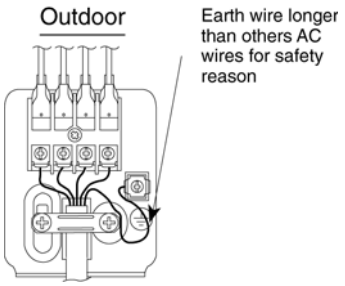

12 Operation And Function

12.1. Heating Operation

- Heating operation can be set using remote control.
- This operation is applied to warm the room temperature reaches the setting temperature set on the remote control.
- The remote control setting temperature, which takes the reading of intake air temperature sensor, can be adjusted from 16°C to 30°C.
- During heating operation, the compressor will stop running and restart as shown in below figure.

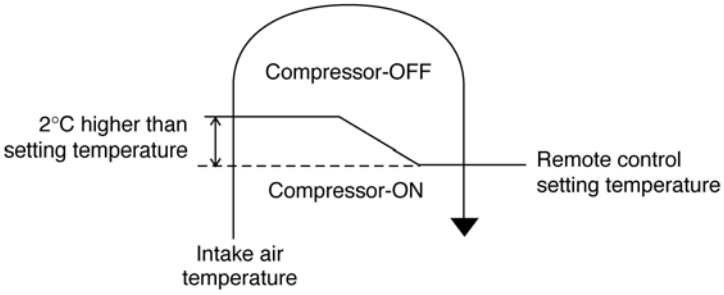

12.1.1. Heating Operation Time Diagram

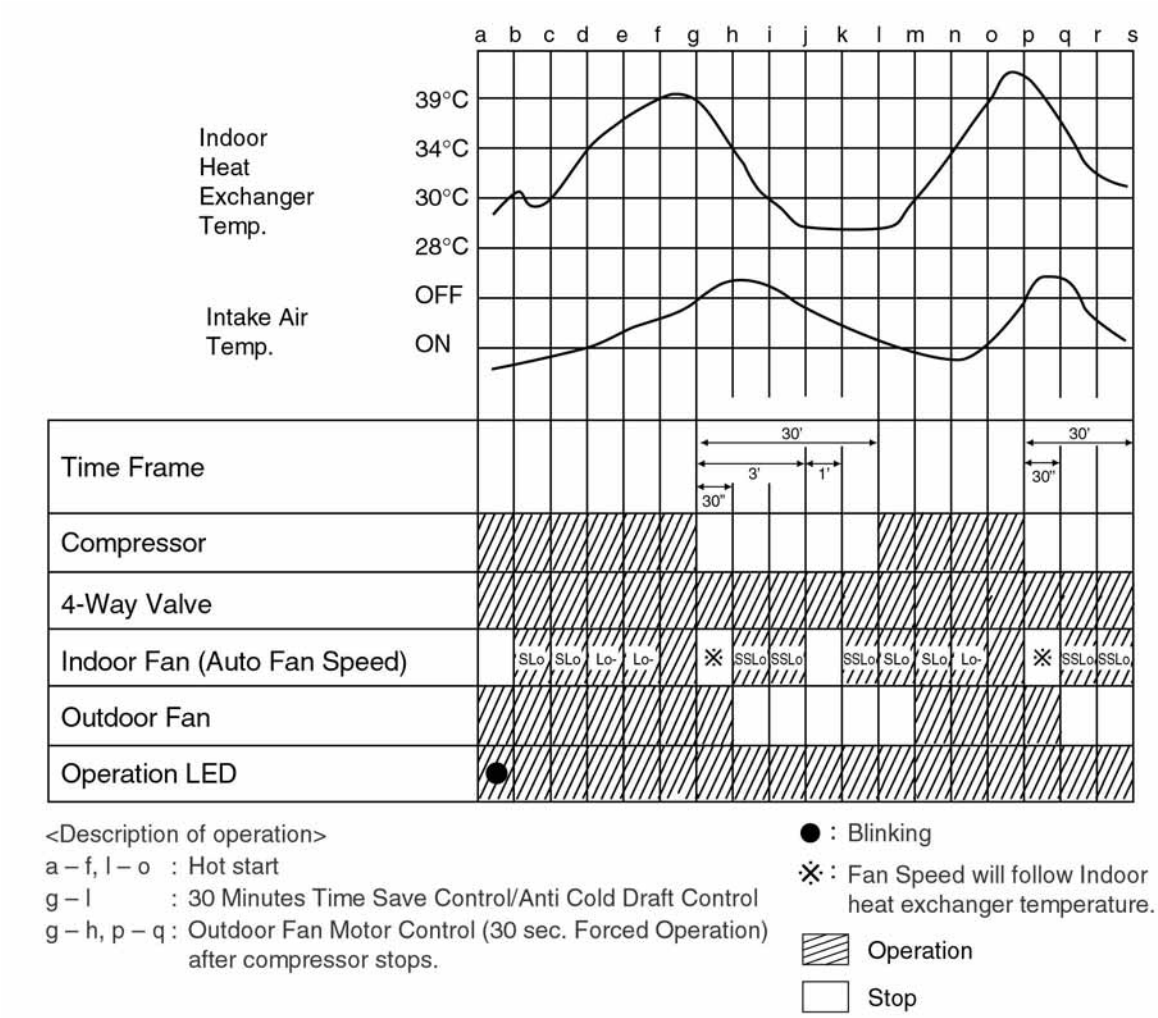

12.2. Cooling Operation

- Cooling operation can be set using remote control.
- This operation is applied to cool down the room temperature reaches the setting temperature set on the remote control.
- The remote control setting temperature, which takes the reading of intake air temperature sensor, can be adjusted from 16°C to 30°C.
- During cooling operation, the compressor will stop running and restart as shown in below figure.

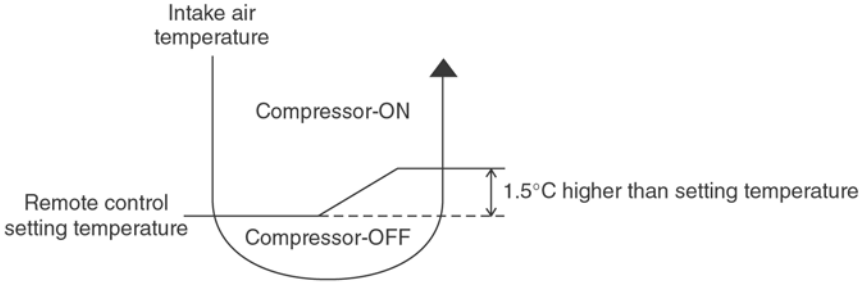

12.2.1. Cooling Operation Time Diagram

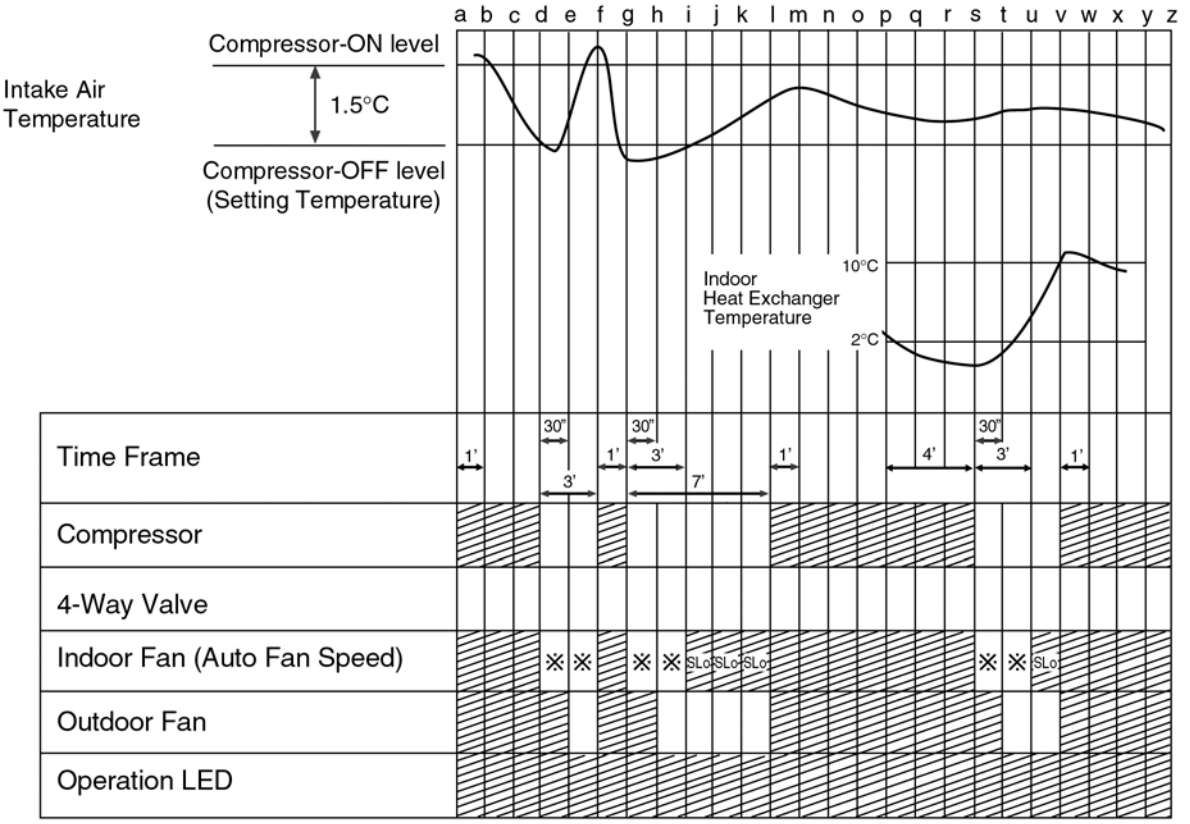

<Description of operation>

a – b, f – g, l – m, v – w	: Minimum 60 seconds forced operation	Operation
d – f, g – i, s – u	: Minimum 3 minutes restart control (Time Delay Safety Control)	
g – l	: Maximum 7 minutes time save control	Stop
p – v	: Freeze Prevention Control	
d – e, g – h, s – t	: Outdoor Fan Motor Control (30 sec. Forced Operation) after compressor stops	
(※) d – f, g – i, s – u	: Indoor fan rotates at SLo for 20 seconds and off for 160 seconds.	

12.3. Soft Dry Operation

- Soft Dry operation can be set using remote control.
- Soft Dry operation is applied to dehumidify and to perform a gentle cooling to the room.
- This operation starts when the intake air temperature sensor reaches the setting temperature on the remote control.
- When operation begins, Soft Dry will be switched “ON” for a maximum 10 minutes, then Soft Dry operation will be turned “OFF” for a minimum 6 minutes. After that, the Soft Dry operation will be “ON” and “OFF” based on the setting temperature as shown in below figure.
- However after 3 minutes of compressor off, during Soft Dry “OFF” (within 6 minutes Soft Dry restart control), the indoor unit will start to operate at normal Cooling mode if the intake temperature is higher than Cooling “ON” point.

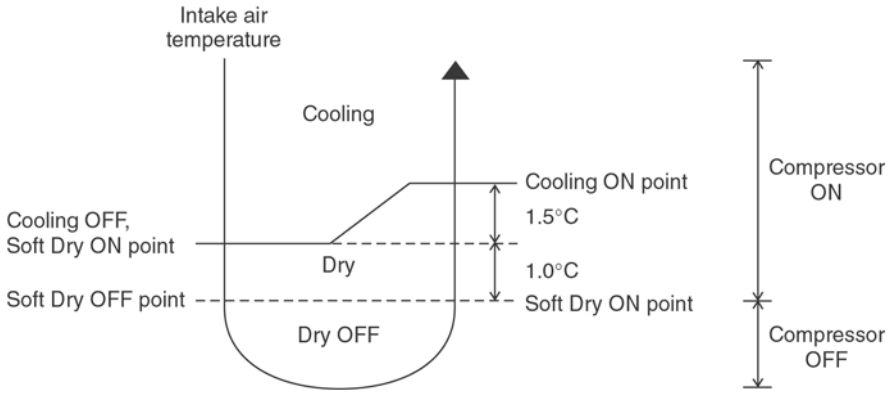

12.3.1. Soft Dry Operation Time Diagram

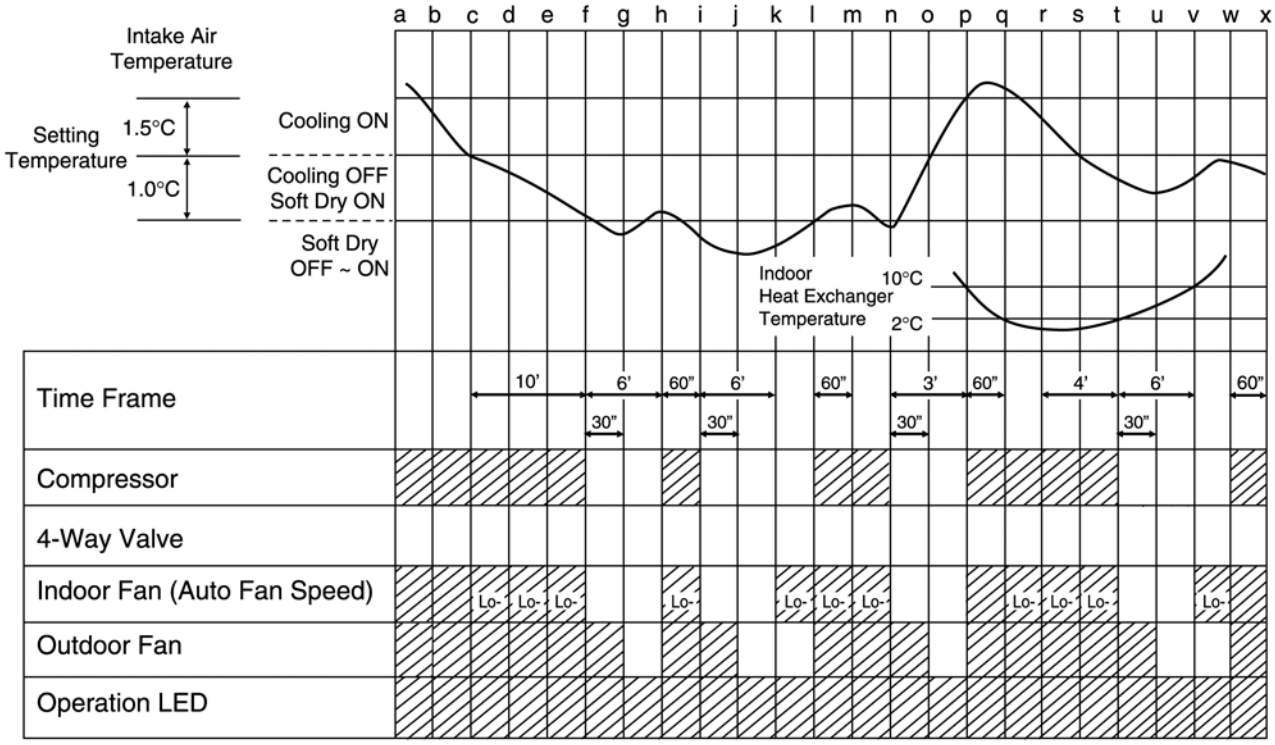

<Description of operation>

h – i, l – m, p – q, w – x	:	Minimum 60 seconds foreced operation
n – p	:	Minimum 3 minutes restart control (Time Delay Safety Control) - Cooling operation
f – h, i – k, t – v	:	Minimum 6 minutes restart control (Time Delay Safety Control) - Soft dry operation
r – w	:	Freeze Prevention Control
f – g, i – j, n – o, t – u	:	Outdoor Fan Motor Control

12.4. Automatic Operation

- Automatic operation can be set using remote control.
- This operation starts to operate with indoor fan at SLo speed for 25 seconds to judge the intake air temperature.
- After judged the temperature, the operation mode is determined by referring to the below standard.

↑ Intake Air Temperature		
		Cooling Operation
	23°C	Soft Dry Operation
	20°C	Heating Operation

- Then, the unit start to operate at determined operation mode, until it is switched off using remote control, with the setting temperature as shown in below table.

	Setting Temperature (Standard)
Cooling Operation	25°C
Soft Dry Operation	22°C
Heating Operation	21°C

- Operation mode will be determine again for judgement after 1 hour of operation, if the room temperature reaches to set temperature and compressor off time is over 7 minutes 30 seconds continuously.

※ The present operation mode will be continued, if the room temperature does not reach to set temperature (Compressor keeps running) eventhough after 1 hour from automatic operation mode started.

Standard for Determining Operation Mode
2nd Judgement onwards

Preset Mode	Judgement	Next Mode		
		Cooling	Soft Dry	Heating
Cooling	23°C: Cooling / Heating	O (Judgement: 23°C & Above)	Not Applicable	O (Judgement: Below 23°C)
Soft Dry	20°C: Soft Dry / Heating	Not Applicable	O (Judgement: 20°C & Above)	O (Judgement: Below 20°C)
Heating	25°C: Cooling / Heating	O (Judgement: 25°C & Above)	Not Applicable	O (Judgement: Below 25°C)

- Automatic Set Temperature
  For each operation, set temperature will automatically set as shown below.
- The setting temperature for all the operations can be changed one level up or one level down from the standard temperature as shown in below table by pressing on the temperature up or temperature down button at remote control.

Operation	Hi	(Standard)	Lo
	(+2°C)	(±0°C)	(-2°C)
Cooling	27°C	25°C	23°C
Soft Dry	24°C	22°C	20°C
Heating	23°C	21°C	19°C

- The operation mode judging temperature and standard setting temperature can be increased by 2°C permanently, by open the circuit of JX1 at indoor electronic controller.

↑ Intake Air Temperature		
		Cooling Operation
	25°C	Soft Dry Operation
	22°C	Heating Operation

	Setting Temperature (Standard)
Cooling Operation	27°C
Soft Dry Operation	24°C
Heating Operation	23°C

12.5. Operation Control

(For 11.5.1 to 11.5.7 information applies only to Cooling and Soft Dry Operation)

12.5.1. Restart Control (Time Delay Safety Control)

- When the thermo-off temperature (temperature which compressor stops to operate) is reached during:-
  - Cooling operation - the compressor stops for 3 minutes (minimum) before resume operation.
  - Soft Dry operation - the compressor stops for 6 minutes (minimum) before resume operation.
- If the operation is stopped by the remote control, the compressor will not turn on within 3 minutes from the moment operation stop, although the unit is turn on again within the period.
- This phenomenon is to balance the pressure inside the refrigerant cycle.

12.5.2. 60 Seconds Forced Operation

- Once the air conditioner is turned on, the compresor will not stop within 60 seconds in a normal operation although the intake air temperature has reached the thermo-off temperature. However, force stop by pressing the OFF/ON operation button at the remote control is permitted.
- The reason for the compressor to force operate at minimum 60 seconds is to allow the refrigerant oil run in a full cycle and return back to the outdoor unit.

12.5.3. 7 Minutes Time Save Control

- The compressor will start automatically if it has stopped for 7 minutes and the intake air temperature falls between the compressor ON temperature (A) and compressor OFF temperature (B) during the period.
- This phenomenon is to reduce the built up humidity inside a room.

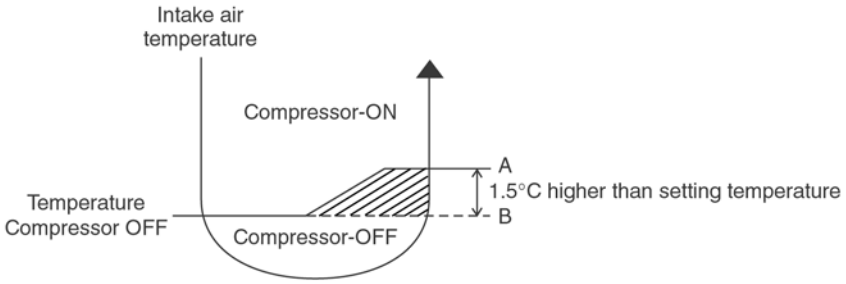

12.5.4. Freeze Prevention Control

- If the temperature of the indoor heat exchanger falls below 2°C continuously for 4 minutes or more, the compressor turns off. The fan speed setting remains the same.
- This phenomenon is to protect the indoor heat exchanger from freezing and to prevent higher volume of refrigerant in liquid form returning to the compressor.
- Compressor will restart again when the indoor heat exchanger temperature rises to 10°C (Recovery).
- Restart control (Time Delay Safety Control) will be applied in this Control if the recovery time is too short.

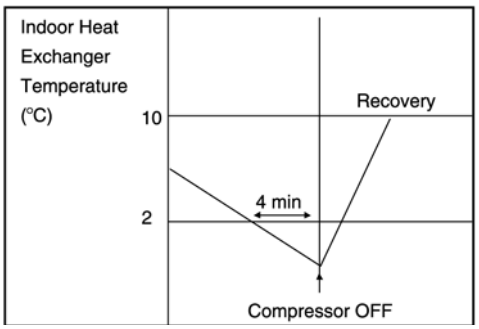

12.5.5. Compressor Reverse Rotation Protection Control

- If the compressor is operating continuously for 5 minutes or longer and the temperature difference between intake air and indoor heat exchanger is 2.5°C (cooling mode) or less for continuous 2 minutes, compressor will stop and restart automatically.
- Time Delay Safety Control is activated before the compressor restart.

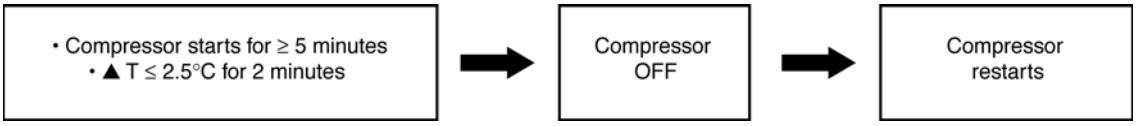

▲ T = Intake air temperature - Indoor heat exchanger temperature

- This is to prevent compressor from rotate reversely when there is an instantaneous power failure.

12.5.6. Starting Current Control

- When the compressor, outdoor fan motor and indoor fan motor are simultaneously started, the indoor fan motor will start to operate at 1.6 second later.
- The reason of the difference is to reduce the starting current flow.

12.5.7. Dew Prevention Control

- Purpose is to prevent dew formation on indoor unit air discharge area.
- The following conditions occur for 30 minutes continuously, dew prevention control will activate:
  - Remote Control setting temperature is less than 25°C.
  - Compressor is on.
  - Cooling operation mode.
  - Indoor fan motor operate at Low fan speed.
- This control is cancelled immediately when above condition is changed.
- Dew prevention is control by:
  1. Lo fan speed.
     Lo fan is changed to Lo+ fan

(For 11.5.8 to 11.5.14 information applies only to Heating Operation)

12.5.8. Restart Control (Time Delay Safety Control)

- When the thermo-off temperature (temperature which compressor stops to operate) is reached during:-
  - Heating operation - the compressor stops for 3 minutes (minimum) before resume operation.
- If the operation is stopped by the remote control, the compressor will not turn on within 3 minutes from the moment operation stop, although the unit is turn on again within the period.
- This phenomenon is to balance the pressure inside the refrigerant cycle.

12.5.9. Compressor Reverse Rotation Protection Control

- If the compressor is operating continuously for 5 minutes or longer and the temperature difference between indoor heat exchanger and intake air is 5°C (heating mode) or less for continuous 2 minutes, compressor will stop and restart automatically.
- Time Delay Safety Control is activated before the compressor restart.

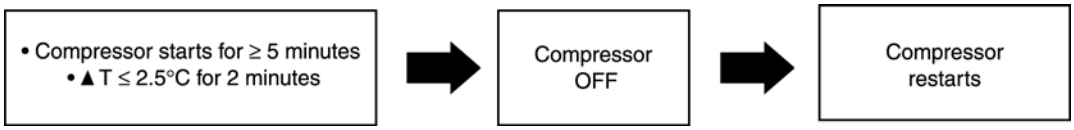

▲ T = Indoor heat exchanger temperature - Intake air temperature

- This is to prevent compressor from rotate reversely when there is an instantaneous power failure.

12.5.10. Overload Protection Control

- Outdoor Fan Control
  - If the temperature of the Outdoor Heat Exchanger less than -3°C, Outdoor Fan is ON. The Outdoor Fan stop, when Outdoor Heat Exchanger temperature is T_b or more according to Outdoor Air Temperature region as table below:
    The Outdoor Fan restarts when the indoor heat exchanger temperature falls to 49°C.

Outdoor Air Temperature	<10°C	≥10°C ~ <15°C	≥15°C ~ <20°C	≥20°C ~ <25°C	≥ 25°C	Outdoor Fan OFF
T_b	≥5°C	≥3°C	≥ 1.5°C	≥ 0.5°C	≥ -0.5°C	

During starting of Heating mode and after deice, Outdoor Fan ON for 90 sec. (Hi).

- Compressor High Pressure Control
  - If the indoor heat exchanger becomes 68° C or more, the compressor will stop and restart automatically.
  - Time Delay Safety Control is activated before the compressor restart.

12.5.11. 4-Way Valve Control

- 4-way valve always on during Heating operation. (except deicing operation)
- When the unit is switched off by remote control during Heating operation, the 4-way valve stay at Heating position for 5 minutes.
- This is to prevent the refrigerant flow process sound for being occur.

12.5.12. Hot Start Control

- Hot Start Control is to prevent cool air discharge into the room when heating operation start.
- When Heating operation starts, Indoor fan will not start until the indoor heat exchanger reaches 30°C as diagram shown.

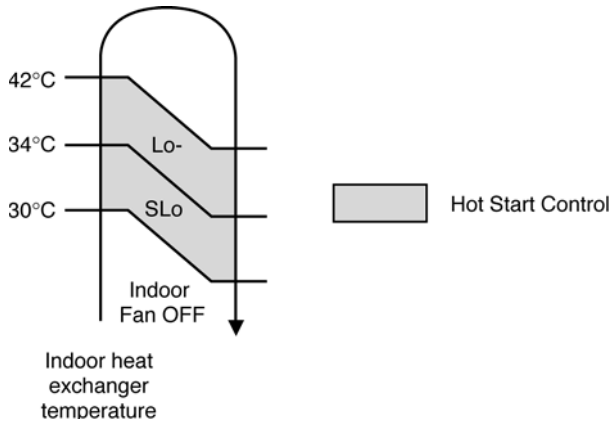

- Hot start is completed when indoor heat exchanger rises to 42°C or operation over 4 minutes.

12.5.13. Anti Cold Draft Control

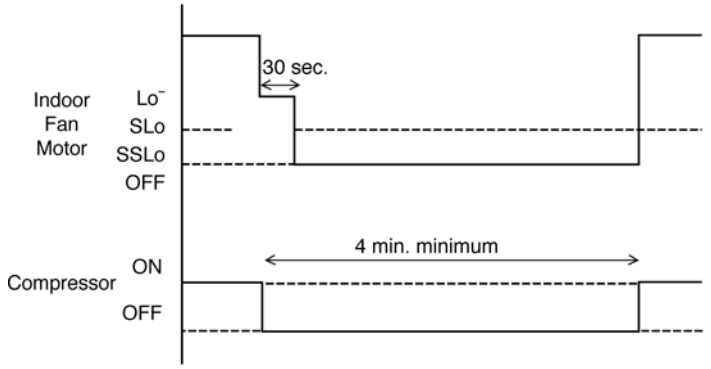

When COMP = Thermal OFF, indoor fan speed immediately changed to Lo⁻ for 30 sec., follow by SSLo speed until COMP = ON.

12.5.14. Deicing Control

Deice starts to prevent frosting at outdoor heat exchanger.

- Normal Deicing
  Deice operations detection commences in Heating operation starts or 60 minutes after previous deice operation. If the outdoor piping temperature drops to -4°C for 50 sec. continuously during compressor is in operation, deice will start.
  (There is no detection during Outdoor Fan stops.)

- Overload Deicing
  During heating operation, if the outdoor Fan OFF duration (due to overload control) is accumulated up to 60 minutes and after compressor starts for 1 minutes, deicing starts.

- Deicing ends when
  1. 12 minutes after deicing operation starts;
  2. The outdoor piping temperature rises to 12°C.

- After deicing operation, compressor stops for 30 seconds and 4-way valve stays at cooling position for 10 seconds.

a) Normal Deicing Time Diagram

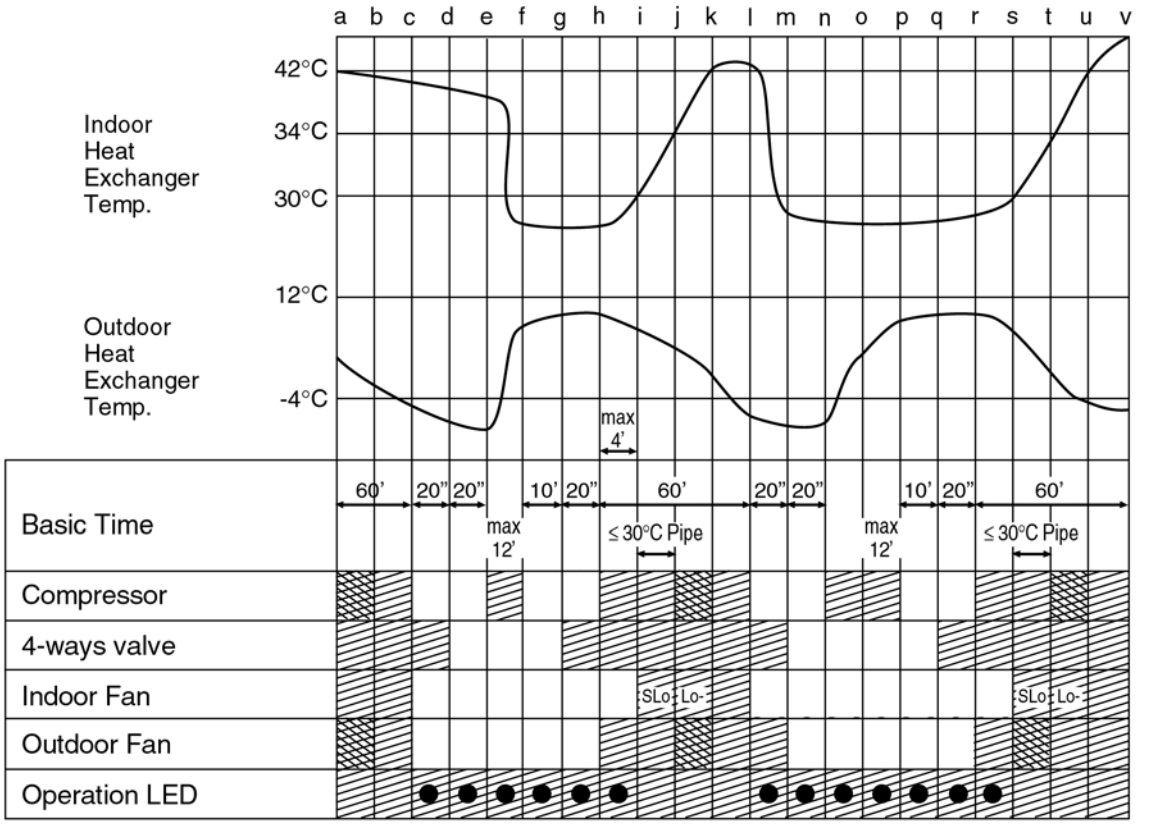

<Description of operation>

a – c : Deicing operation judging condition established
c – e, l – n : Preparation time
e – h : Deicing operation (timer detected)
h – i, r – s : Hot start (no thermo OFF)
i – j, s – t : No thermo OFF (after finished hot start)

● : Blinking
Operation
Stop
Operation or stop

b) Overload Deicing Time Diagram

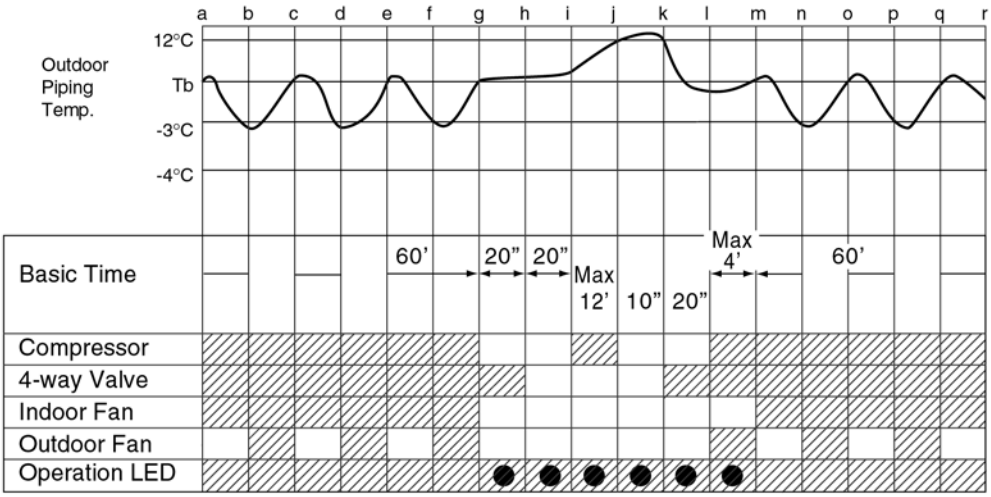

<Description of operation>

a – i : Overload control
i – l : Overload deicing
l – m : Hot start
m – r : Overload control
g – i : Preparation for overload deicing (For normal R22 control, operation for g – i is not included, applicable only for new refrigerant model).

● : Blinking
Operation
Stop

12.6. Indoor Fan Speed Control

• Indoor Fan Speed can be set using remote control.

12.6.1. Fan Speed Rotation Chart

Speed		CS-PW24JKE
Cool, Dry	Heat	
S Hi	Hi	1630
Hi		1570
Me	Me	1480
Lo+	Lo	1380
Lo		1280
Lo-	Lo-	1070
S Lo	S Lo	830
	SS Lo	300
Q SHi	Q Hi	1530
Q Hi		1470
Q Me	Q Me	1380
	Q Lo	1280
Q Lo		1180

12.6.2. Automatic Fan Speed Control

• When set to Auto Fan Speed, the fan speed is adjusted between maximum and minimum setting as shown in the table.
- Fan speed rotates in the range of Hi, Me and Lo-.
- Deodorizing Control will be activated.

Tap				S Hi	Hi	Me	Lo+	Lo	Lo-	SLo	SSLo	Stop
Cooling	Normal	Manual	Hi		○							
			Me			○						
			Lo					○				
		Auto			○	○			○			○
Soft Dry		Manual							○			○
		Auto							○			○
Heating	Normal	Manual	Hi	○					○	○	○	○
			Me			○			○	○	○	○
			Lo				○		○	○	○	○
		Auto				○	○		○	○	○	○
Auto Mode judgement										○		

• Auto Fan Speed during cooling operation:

1. Indoor fan will rotate alternately between off and on as shown in below diagram.
2. At the beginning of each compressor start operation, indoor fan will increase fan speed gradually for deodorizing purpose.
3. For the first time the compressor operate, indoor fan will be switched to Hi fan speed from Lo- after 70 seconds from the start of compressor. This cause the room temperature to achieve the setting temperature quickly.
4. During compressor stop, indoor fan will operate at Lo- for the beginning 20 seconds to prevent higher volume of refrigerant in liquid from returning to the compressor.
5. After the compressor at turn off condition for 3 minutes, indoor fan will start to operate at Lo- to circulate the air in the room. This is to obtain the actual reading of the intake air temperature.
6. When the compressor resume operation, indoor fan will operate at Me fan speed (after 70 seconds from the restart of compressor) to provide comfort and lesser noise environment.

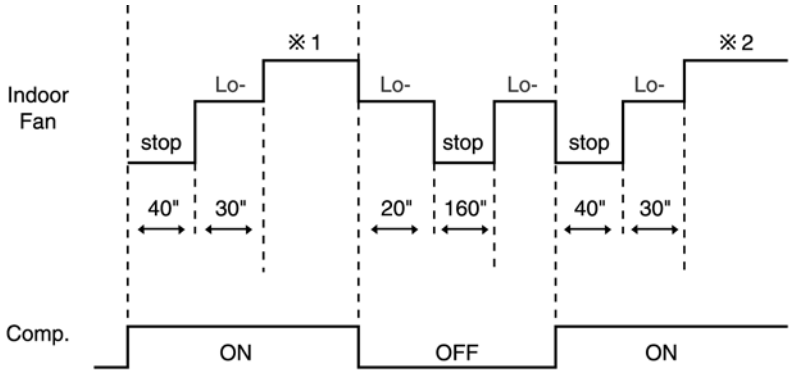

※ 1 Fan Speed is Hi until the compressor stops (when the room temperature reaches setting temperature).

※ 2 Fan Speed is Me after the compressor restarts.

• Auto Fan Speed during Soft Dry operation:

1. Indoor fan will rotate alternately between off and Lo-.
2. At the beginning of each compressor start operation, indoor fan will increase fan speed gradually for deodorizing purpose.
3. When compressor at turn off condition for 6 minutes, indoor fan will start fan speed at Lo- to circulate the air in the room. This is to obtain the actual reading of intake air temperature.

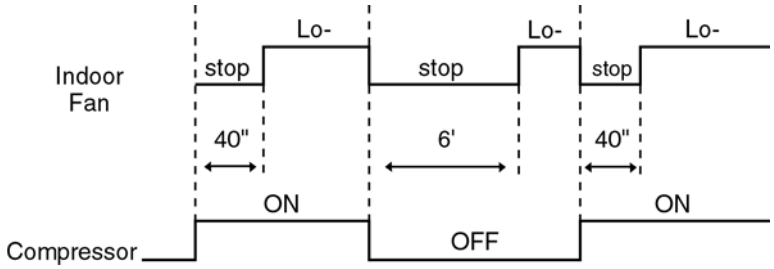

• Auto Fan Speed during Heating operation.

1. Indoor fan will rotate in the range of SLo → Me according to the heat exchanger temperature.

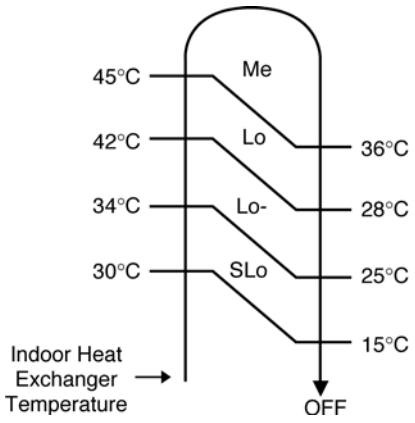

12.6.3. Manual Fan Speed Control

• Manual fan speed adjustment can be carried out by using the Fan Speed selection button at the remote control.
• There are 3 types of fan speed setting: Lo, Me, Hi.

12.7. Outdoor Fan Speed Control

- There is only one speed for outdoor fan motor.
- When the air conditioner is turned on, the compressor and the outdoor fan will operate simultaneously.
- Likewise, both compressor and outdoor fan will stop at the same time if the unit is turned off.

12.8. Vertical Airflow Direction Control

12.8.1. Auto Control

(Cooling and Soft Dry Operation condition)

- When the vertical airflow direction is set to Auto using the remote control, the louver swings up and down as shown in the diagram.
- When stop operation using the remote control, the discharge vent is reset, and stop at the closing position.
- During Cooling operation or Soft Dry operation, indoor fan motor may stop to rotate at certain periods. At that condition, the louver will stop swinging and rest at the upper limit.
- During dew prevention control, Airflow Direction Auto-control angle change from 10°-38° to 10°-27° under Cooling and Soft Dry operation mode.

Cooling and Soft Dry Operation

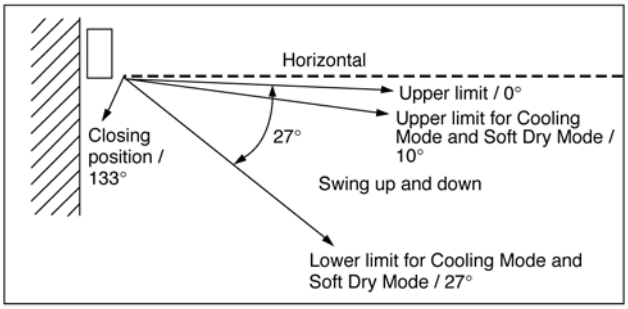

(Heating Operation condition)

- When the piping air temperature reaches 38°C, the louver is changed from upper to lower limit. When the piping air temperature falls to 35°C, the louver is changed from lower to upper limit.

Heating Operation

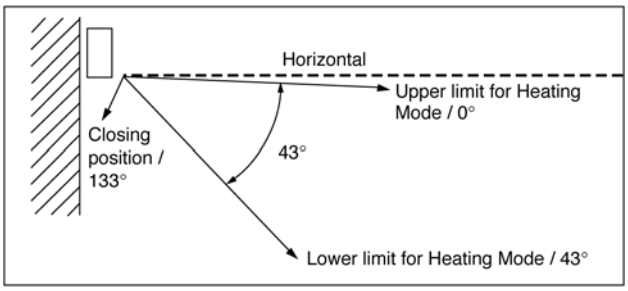

12.8.2. Manual Control

- When the vertical airflow direction is set to Manual using the remote control, the automatic airflow is released and the airflow direction louver move up and down in the range shown in the diagram.
- The louver can be adjusted by pressing the button to the desired louver position.
- When stop operation using the remote control, the discharge vent is reset, and stop at the closing position.
- During dew prevention control, Airflow Direction Manual control angle change from 10°, 14°, 18°, 22°, 27° to 10°, 13°, 16°, 19°, 22° under Cooling and Soft Dry operation mode.

Cooling and Soft Dry Operation

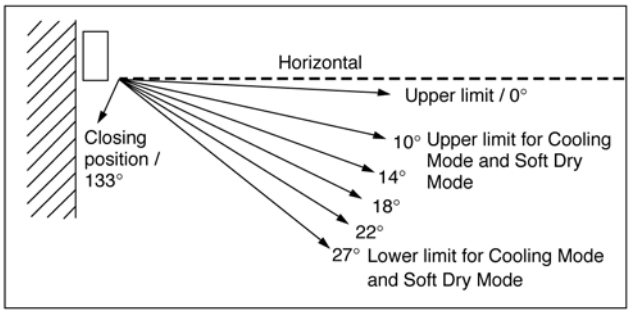

Heating Operation

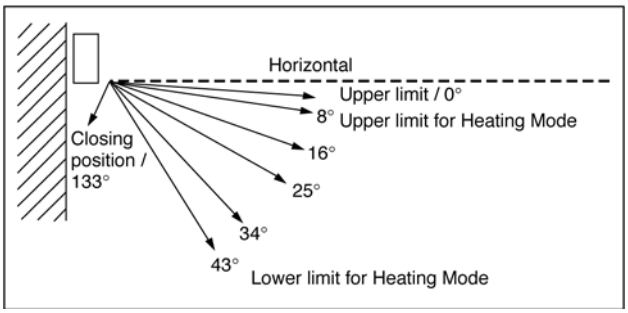

12.9. Timer Control

- There are 2 types of timer, ON and OFF timer.
- Both ON and OFF timer can be set by pressing ON or OFF button respectively.
- By pressing ON/OFF operation button, ON Timer or OFF Timer will not be cancelled.
- To cancel the previous timer setting, press CANCEL button.
- To activate the previous timer setting, press SET button once again.
- If main power supply is switched off, the Timer setting will be cancelled.

12.9.1. ON Timer

- When ON Timer is set by using the remote control, the unit will start to operate slightly before the set time, so that the room will reach nearly to the set temperature by the set time.
- For Cooling and Soft Dry operation, the operation will start 15 minutes before the set time.
- For Heating operation, the operation will start 30 minutes before the set time.
- For Automatic operation, the indoor fan will operate at SLo speed for 25 seconds, 30 minutes before the set time to detect the intake air temperature to determine the operation mode. The operation indication lamp will blink at this time.

12.9.2. OFF Timer

- When OFF Timer is set by using the remote control, the unit will stop operate according to the desired setting.

12.10. Random Auto Restart Control

- If there is a power failure during operation, the air conditioner will automatically restart after 3 to 4 minutes when the power is resumed.
- It will start with previous operation mode and airflow direction.
- If there are more than one air conditioner unit in operation and power failure occur, restart time for each unit to operate will be decided randomly using 4 parameters:- intake air temperature, setting temperature, fan speed and air swing louver position.
- This Random Auto Restart Control is not available when Timer is set.
- This control can be omitted by open the circuit of JX2. (Refer Circuit Diagram)

12.11. Remote Control Signal Receiving Sound

- Long beep sound will be heard when:-
  - Stopping the air conditioner using OFF/ON operation button.
- Short beep sound will be heard for other settings.

13 Servicing Mode

13.1. Auto OFF/ON Button

- The “Auto OFF/ON Button” (behind the front grille) is used to operate the air conditioner if remote control is misplaced or mul-functioning.
- Forced cooling operation is possible by pressing the “Auto OFF/ON Button” for more than 5s where “beep” sound is heard then release the button.
- User able to select remote control transmission code and toggle remote control signal receiving sound under various setting mode.
- To enter various setting mode:
  - Press the “Auto OFF/ON Button” continuously for 5s (“beep” sound is heard) and release.
  - Within 20s, press the “Auto OFF/ON Button” continuously for 5s again (2 “beep” sound is heard) and release.
  - Various setting mode has limit up to 20s. Then return to normal operation.

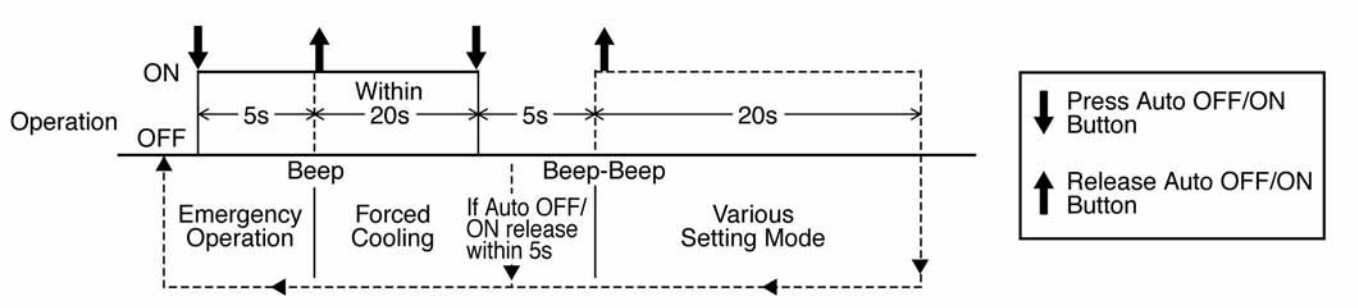

13.1.1. Toggle Remote Control Signal Receiving Sound

- Under various setting mode, press the “Auto OFF/ON Button” to toggle the remote control sound.
  - Short “beep”: Turn ON remote control signal receiving sound.
  - Long “beep”: Turn OFF remote control signal receiving sound.
- After “Auto OFF/ON Button” is pressed, the 20s counter for various setting mode is restarted.

13.1.2. Select Remote Control Transmission Code

- There are 4 types of remote control transmission code could be selected and stored in EEPROM of indoor unit. The indoor unit will only operate when received signal with same transmission code from remote control. This could prevent signal interference when there are 2 or more indoor unit installed nearby together.
- To change remote control transmission code, short or open jumpers at the remote control printed circuit board.

Remote Control Printed Circuit Board	Transmission Code Combination		
	J - A	J - B	Remote Control No.
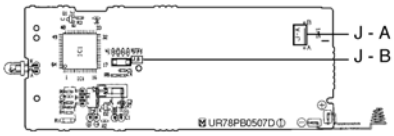	Short	Open	A (Default)
	Open	Open	B
	Short	Short	C
	Open	Short	D

- Under various setting mode, after select the transmission code combination of remote control, press any button of remote control to transmit a signal to indoor unit. The transmission code will be stored in EEPROM.
- After signal is received, the various setting mode is cancelled and return to normal operation.

14 Troubleshooting Guide

14.1. Refrigeration Cycle System

In order to diagnose malfunctions, make sure that there are no electrical problems before inspecting the refrigeration cycle. Such problems include insufficient insulation, problem with the power source, malfunction of a compressor and a fan.

The normal outlet air temperature and pressure of the refrigeration cycle depends on various conditions, the standard values for them are shown in the table on the right.

Normal Pressure and Outlet Air Temperature (Standard)

	Gas pressure Mpa (kg/cm²G)	Outlet air temperature (°C)
Cooling Mode	0.9 ~ 1.2 (9 ~ 12)	10 ~ 16
Heating Mode	2.1 ~ 3.5 (21 ~ 35)	30 ~ 45

* Condition: Indoor fan speed; High
Outdoor temperature 35°C at the cooling mode and 7°C at the heating mode

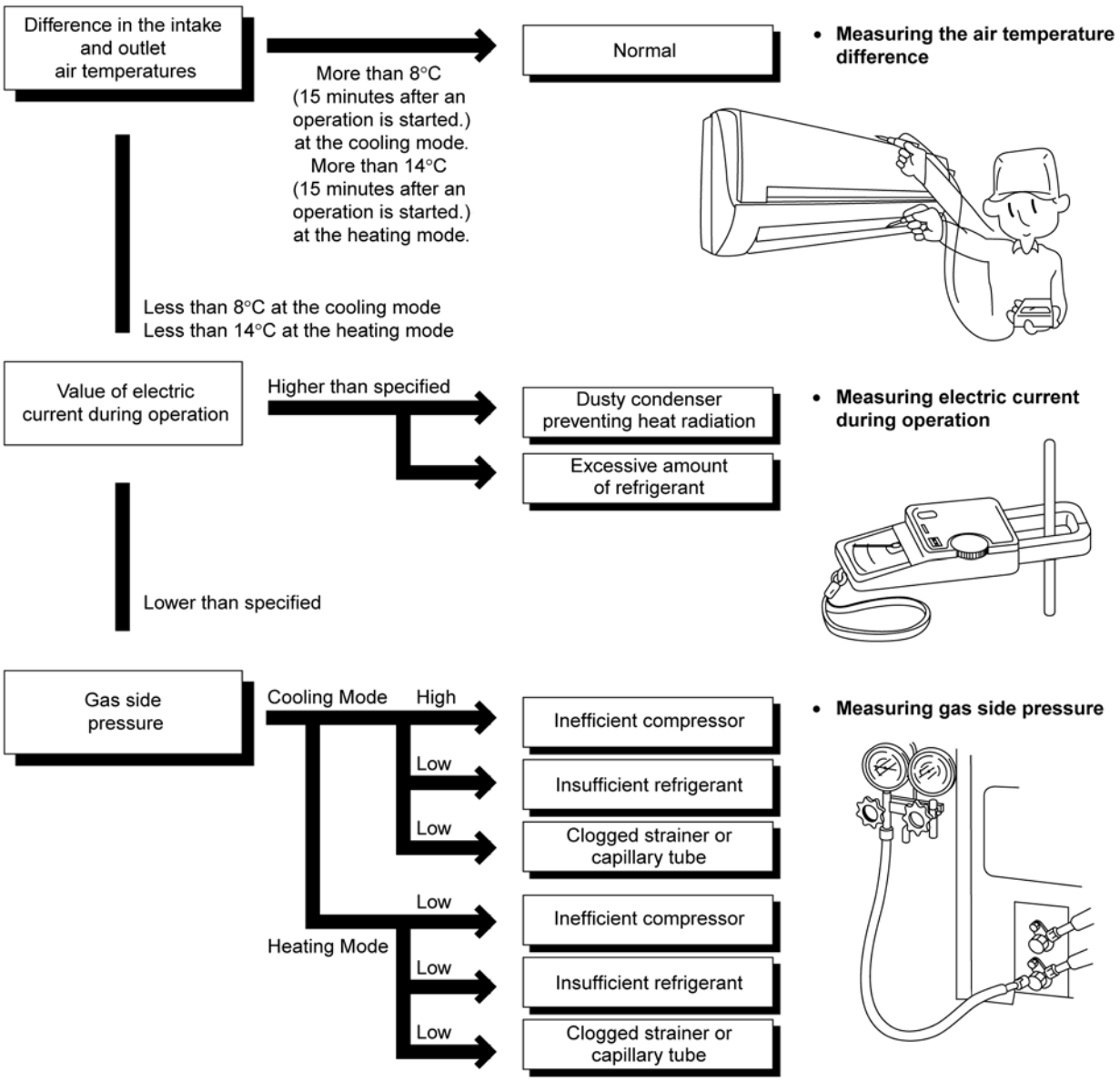

14.2. Relationship Between The Condition Of The Air Conditioner And Pressure And Electric Current

Condition of the air conditoner	Cooling Mode			Heating Mode		
	Low Pressure	High Pressure	Electric current during operation	Low Pressure	High Pressure	Electric current during operation
Insufficient refrigerant (gas leakage)	↘	↘	↘	↘	↘	↘
Clogged capillary tube or Strainer	↘	↘	↘	↘	↘	↘
Short circuit in the indoor unit	↘	↘	↘	↗	↗	↗
Heat radiation deficiency of the outdoor unit	↗	↗	↗	↘	↘	↘
Inefficient compression	↗	↘	↘	↗	↘	↘

• Carry out the measurements of pressure, electric current, and temperature fifteen minutes after an operation is started.

14.3. Diagnosis Methods Of A Malfunction Of A Compressor And 4-way Valve

Nature of fault	Symptom
Insufficient compressing of a compressor	• Electric current during operation becomes approximately 20% lower than the normal value. • The discharge tube of the compressor becomes abnormally hot (normally 70 to 90°C). • The difference between high pressure and low pressure becomes almost zero.
Locked compressor	• Electric current reaches a high level abnormally, and the value exceeds the limit of an ammeter. In some cases, a breaker turns off. • The compressor has a humming sound.
Insufficient switches of the 4-way valve	• Electric current during operation becomes approximately 80% lower than the normal value. • The temperature different between from the discharge tube to the 4-way valve and from suction tube to the 4-way valve becomes almost zero.

15 Disassembly and Assembly Instructions

⚠ WARNING

High voltages are generated in the electrical parts area by the capacitor. Ensure that the capacitor has discharged sufficiently before proceeding with repair work. Failure to heed this caution may result in electric shocks.

15.1. Indoor Electronic Controllers and Control Board Removal Procedures

15.1.1. To remove Front Grille

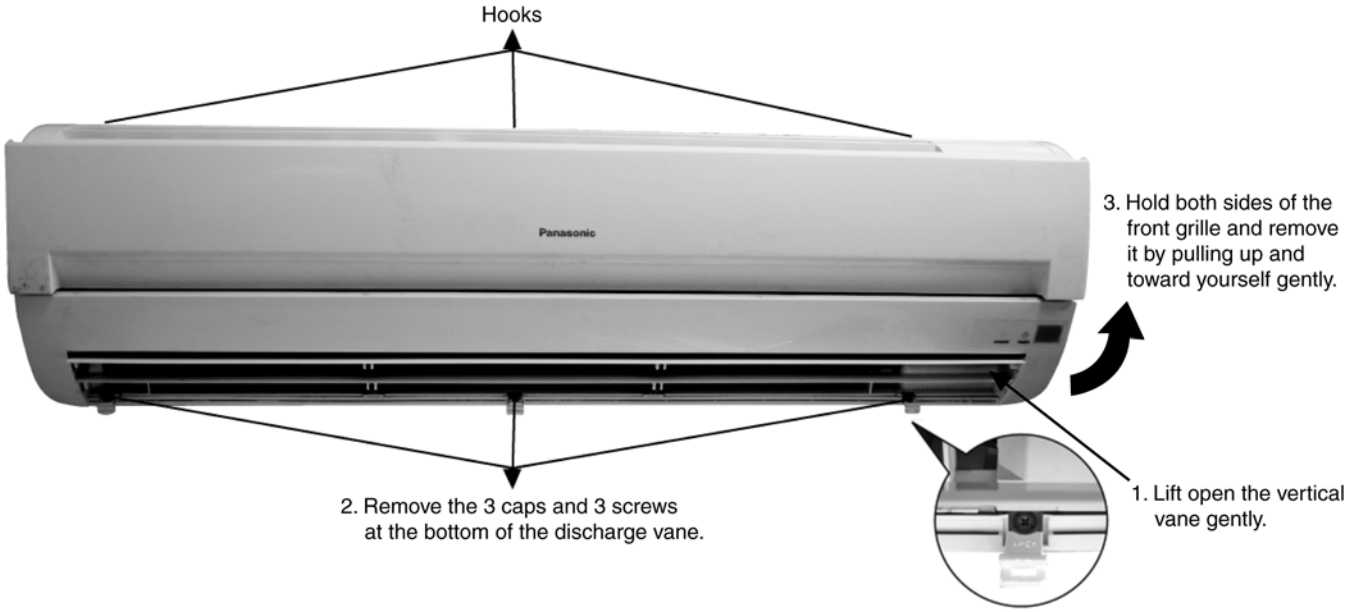

Fig. 1

15.1.2. To remove Power Electronic Controller

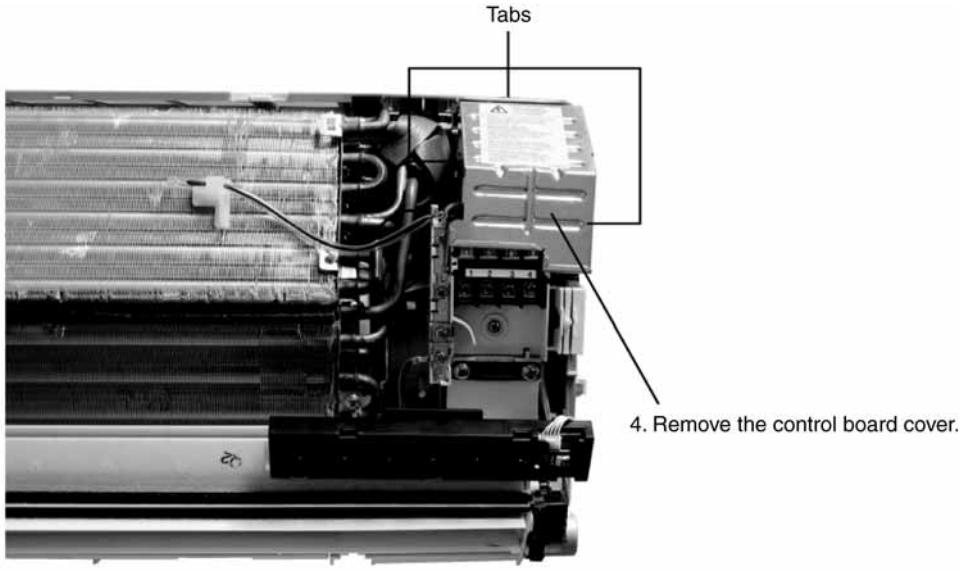

Fig. 2

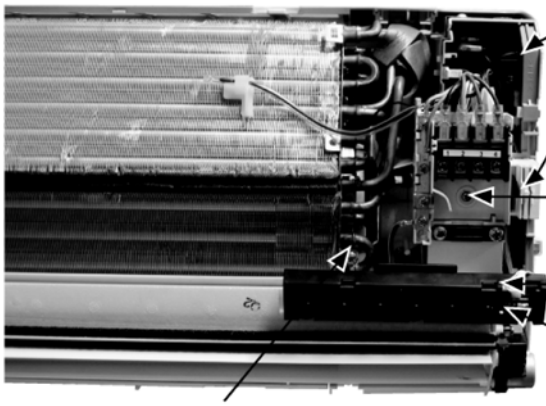

Fig. 3

9. Detach 5 connectors as labeled from the electronic controller. Then pull out slowly while pressing the fastener to the right.

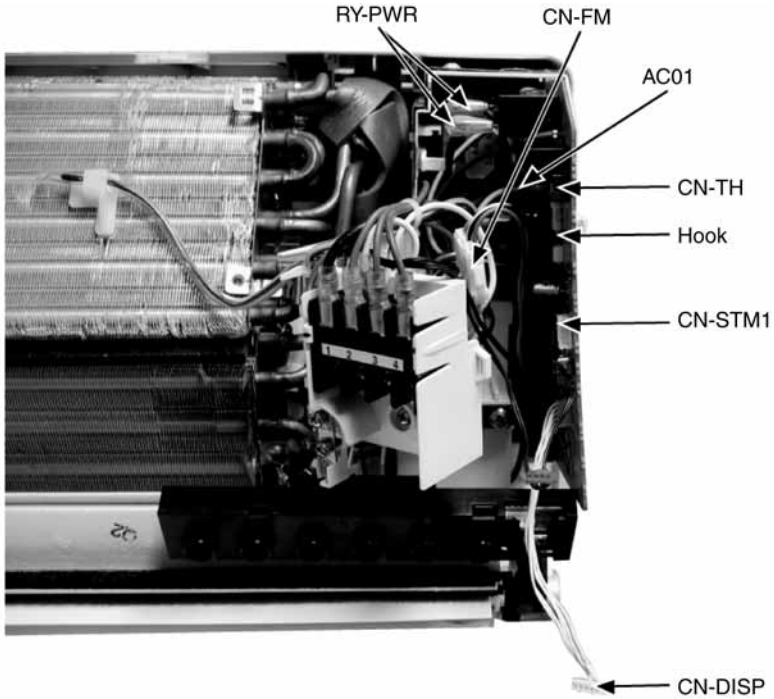

Fig. 4

10. Detach 3 connectors as labeled from the main electronic controller. Then pull out main electronic controller gently.

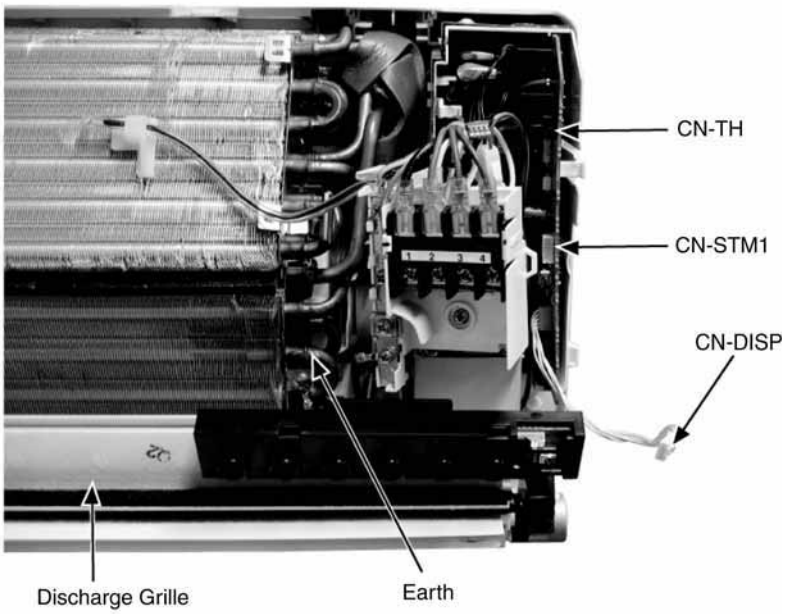

Fig. 5

15.1.3. To remove Discharge Grille

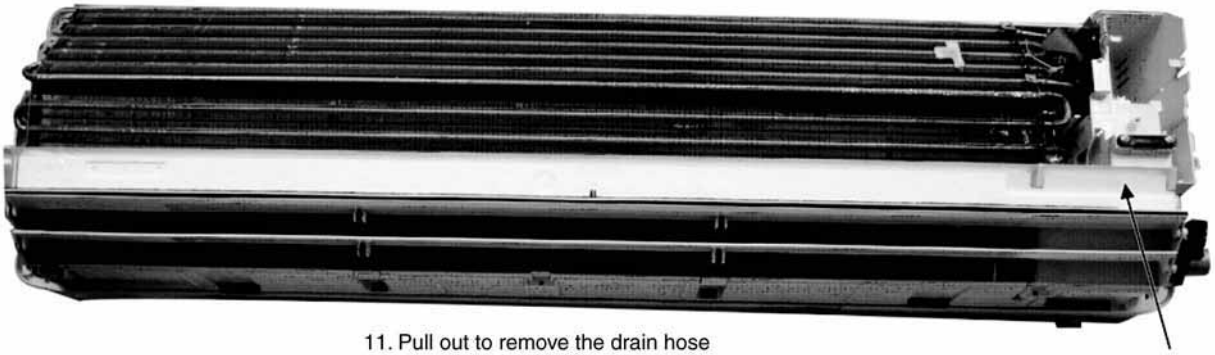

11. Pull out to remove the drain hose (behind the discharge grille) from the discharge grille outlet.

12. Then pull out the discharge grille downward gently to dismantle it.

Fig. 6

15.1.4. To remove Control Board

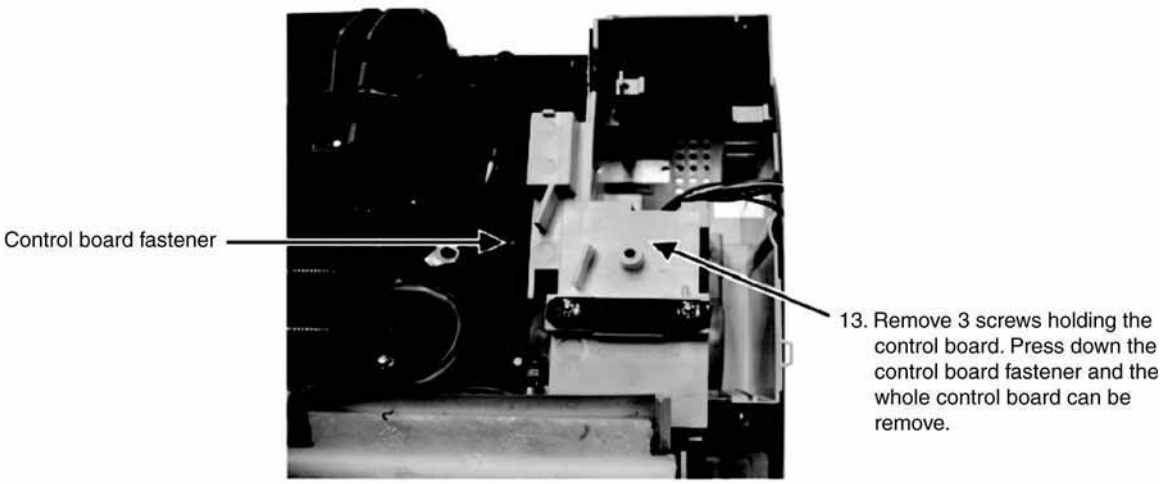

Fig. 7

15.1.5. To remove Cross Flow Fan and Indoor Fan Motor

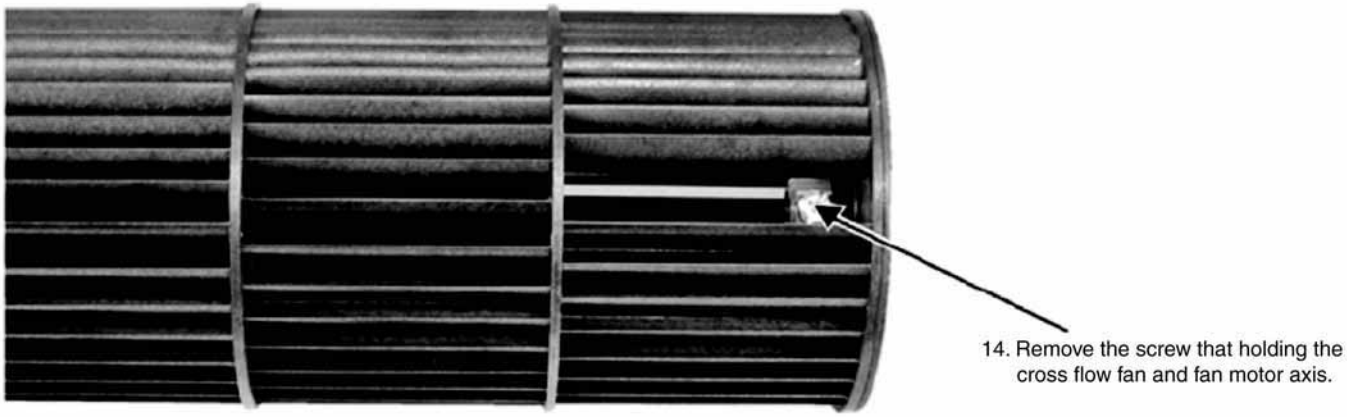

Fig. 8

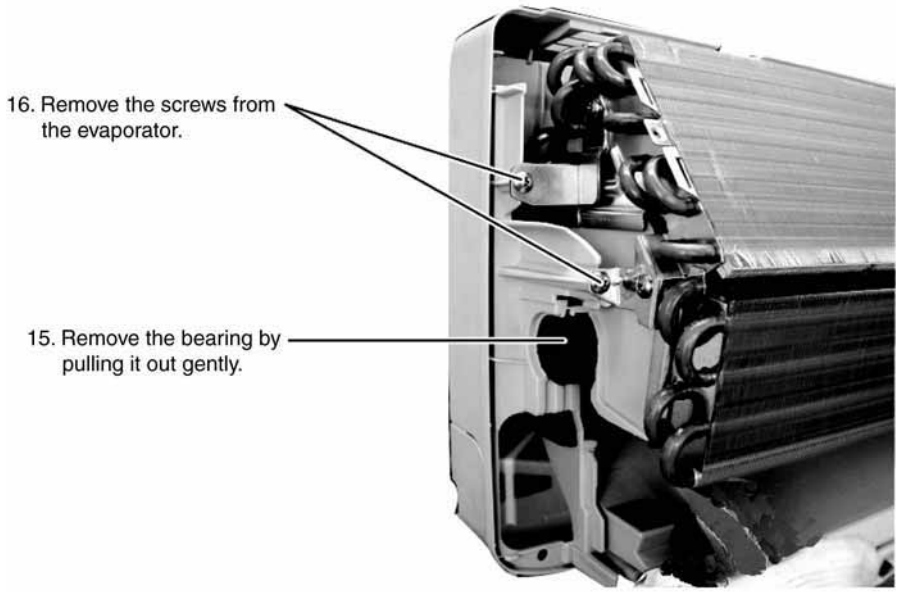
16. Remove the screws from the evaporator.
15. Remove the bearing by pulling it out gently.

Fig. 9

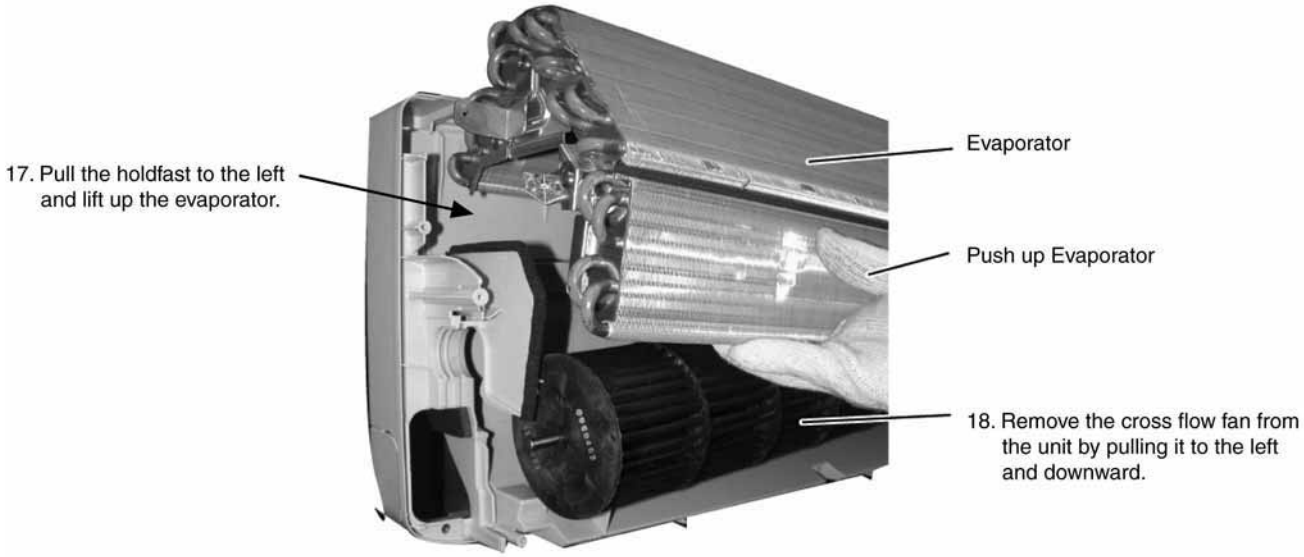
17. Pull the holdfast to the left and lift up the evaporator.
Evaporator
Push up Evaporator
18. Remove the cross flow fan from the unit by pulling it to the left and downward.

Fig. 10

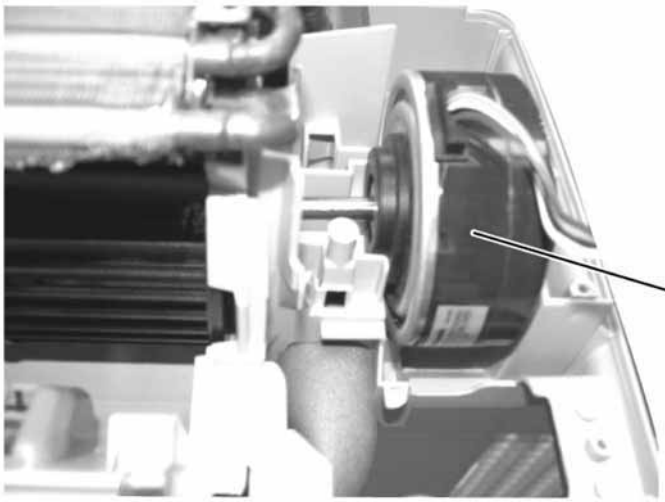

19. Fan motor can be removed after the removal of cross flow fan.

Reminder: To reinstall the fan motor, please adjust the connector to 45° with fan motor before fixing control board.

Fig. 11

16 Technical Data

16.1. Thermostat Characteristics

- **Cooling**

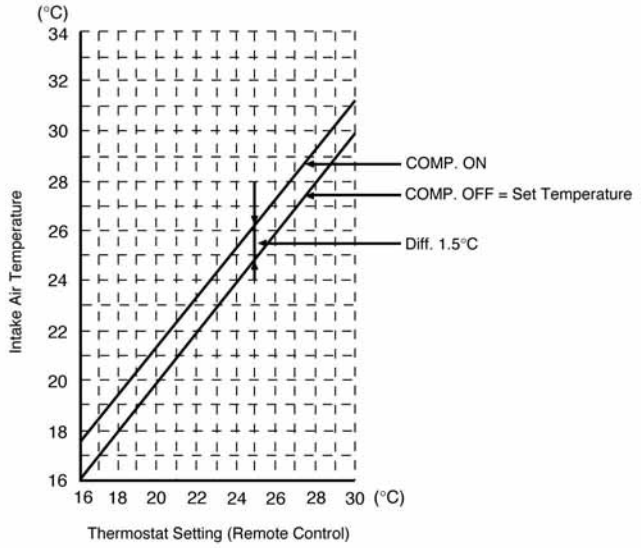

- **Soft Dry**

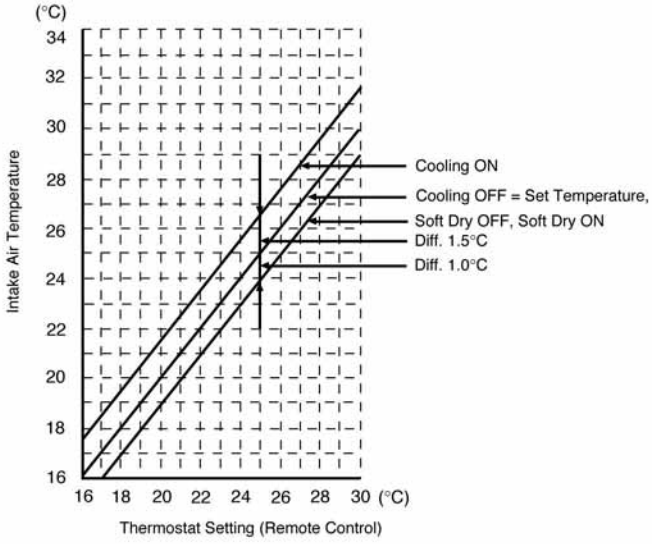

- **Heating**

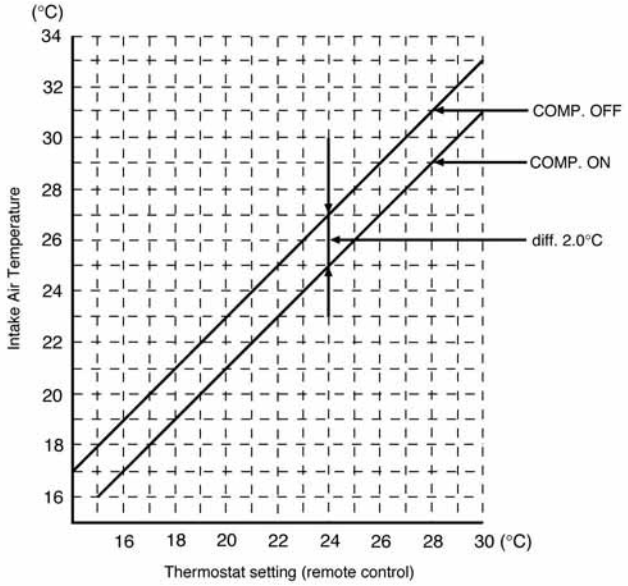

16.2. Sensible Capacity Chart

230V	Outdoor Temp. (°C)											
Indoor wet bulb temp.	30			35			40			46		
	TC	**SHC**	**IP**	**TC**	**SHC**	**IP**	**TC**	**SHC**	**IP**	**TC**	**SHC**	**IP**
17.0°C	6.97	5.29	2.55	6.52	5.07	2.74	6.06	4.87	2.93	5.51	4.63	3.16
19.0°C				7.03		2.78						
19.5°C	7.66	5.54	2.59	7.16	5.32	2.79	6.66	5.12	2.99	6.05	4.87	3.22
22.0°C	8.34	5.74	2.64	7.80	5.52	2.84	7.25	5.33	3.04	6.59	5.08	3.28

TC - Total Cooling Capacity (kW)
SHC - Sensible Heat Capacity (kW)
IP - Input Power (kW)

Indoor 27°C/19°C
Outdoor 35°C/24°C

16.3. Operation Characteristics

16.3.1. CS-PW24JKE CU-PW24JKE

• Cooling Characteristic

[Condition] Room temperature: 27/19°C
Cooling operation: At High fan
Piping length: 5 m

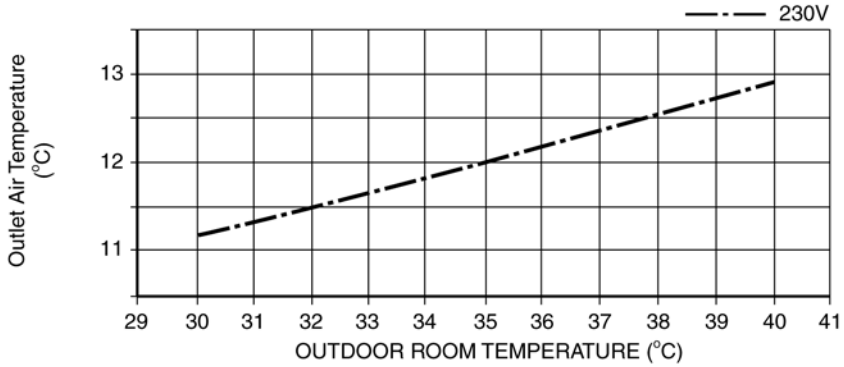

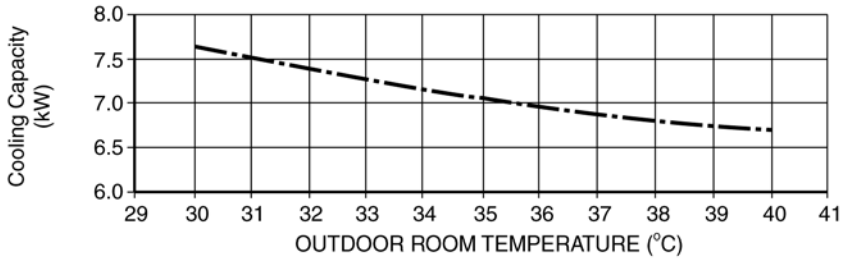

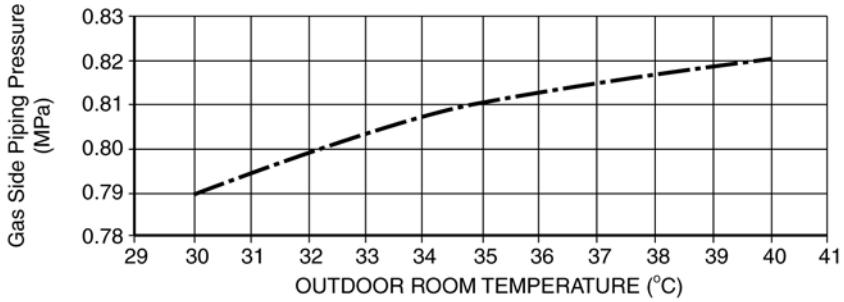

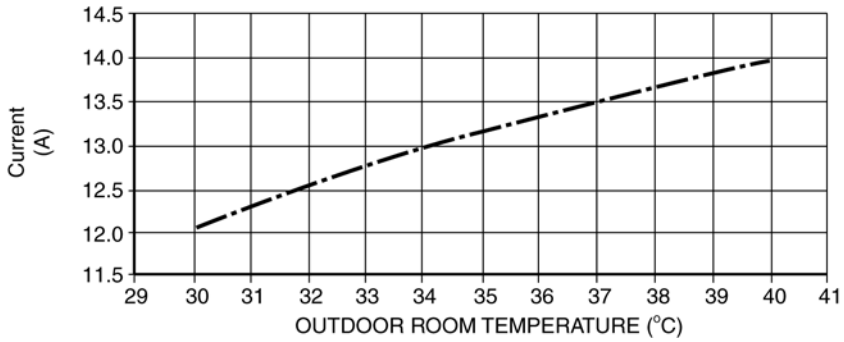

• Piping Length Characteristic (Cooling)

[Condition] Room temperature: 27/19°C
Outdoor temperature: 35/24°C
Cooling operation: At High fan

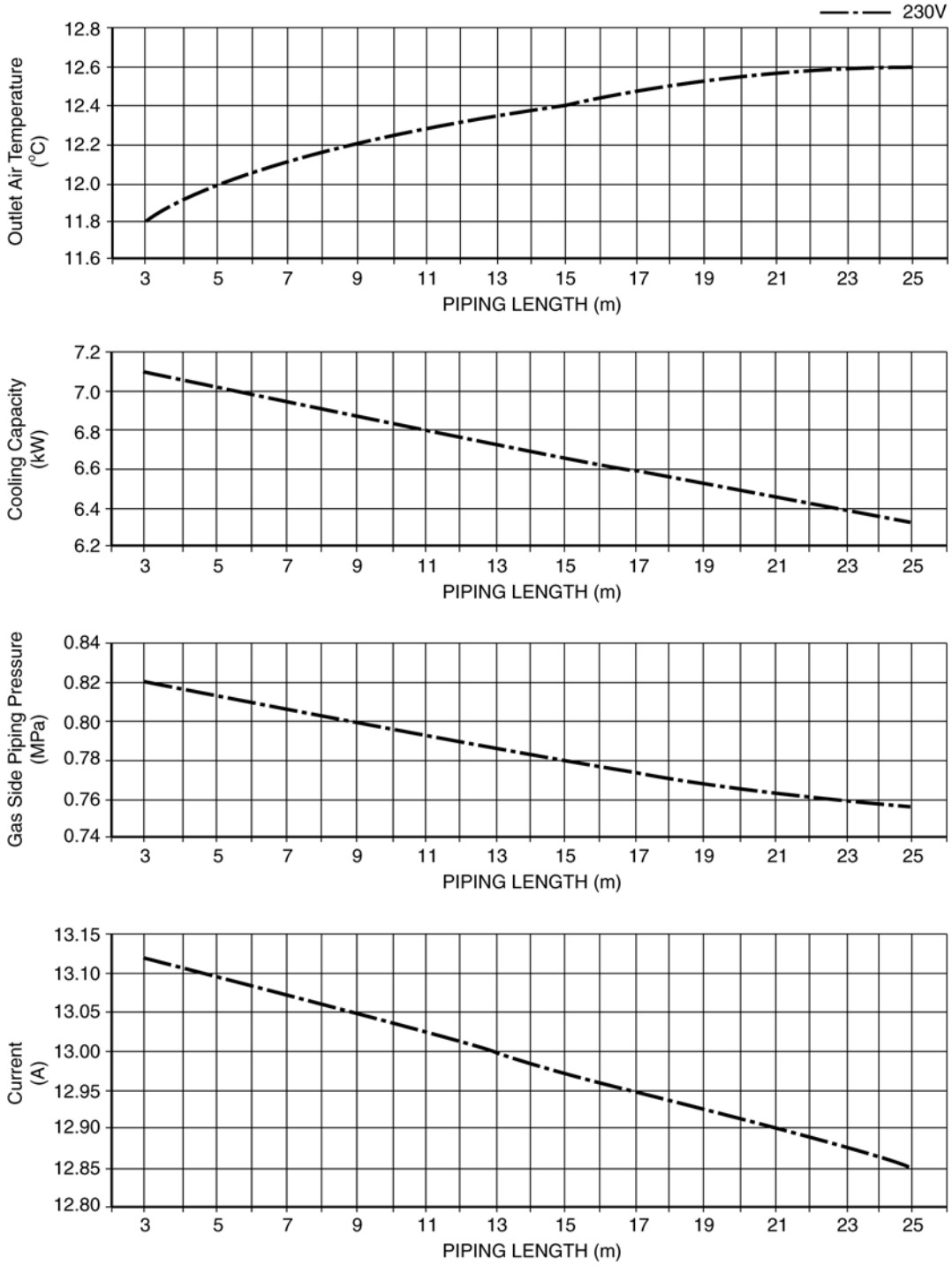

• Heating Characteristic

[Condition] Room temperature: 20°C
Cooling operation: At High fan
Piping length: 5 m

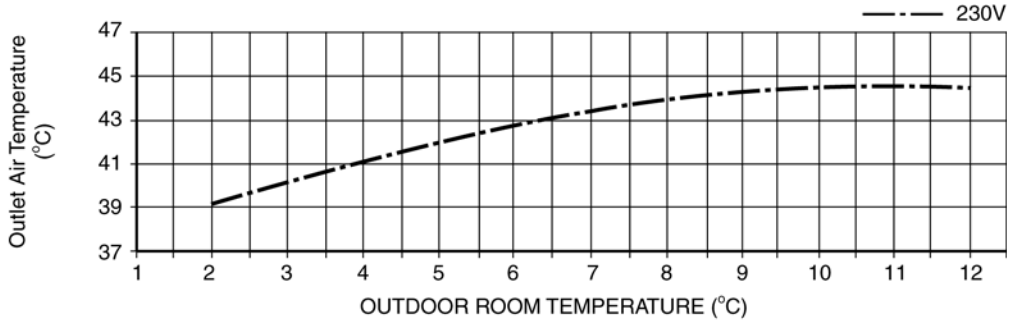

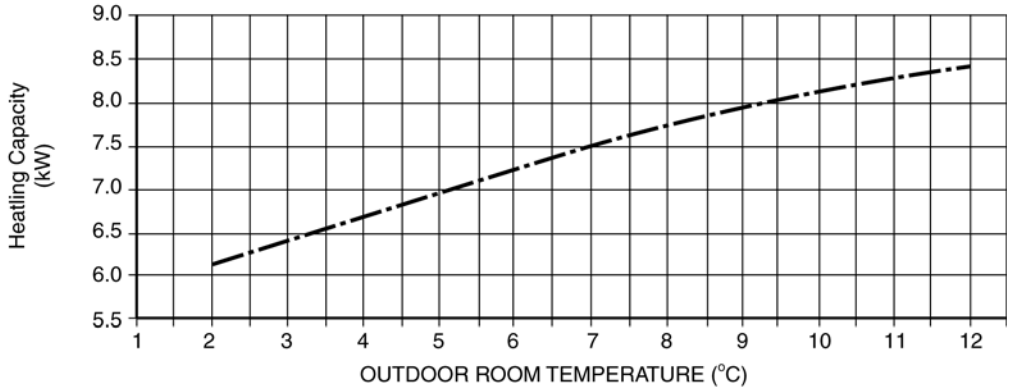

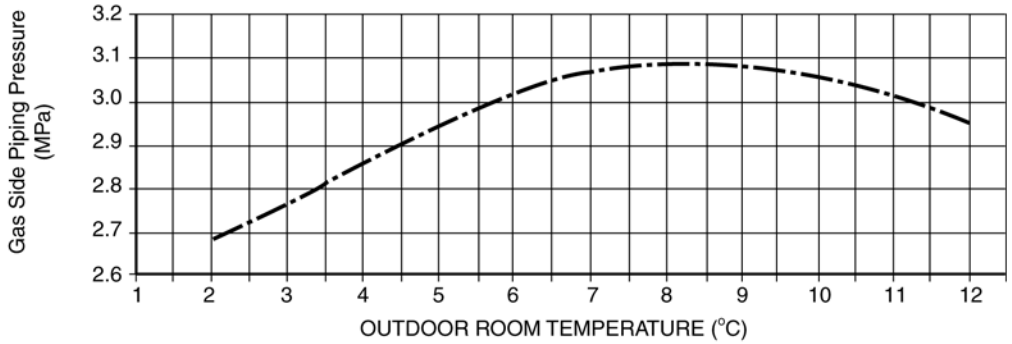

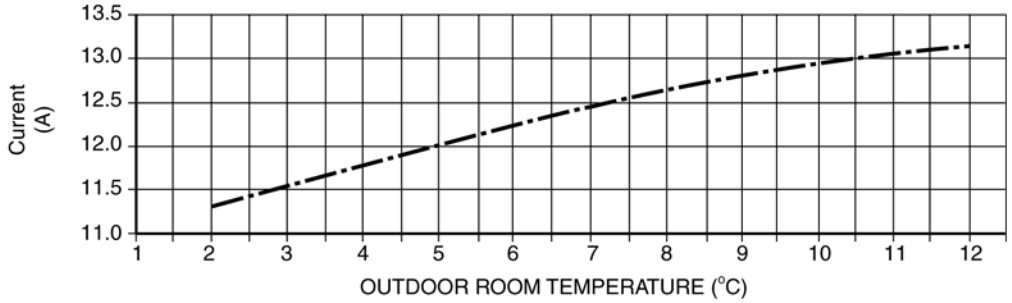

• Piping Length Characteristic (Heating)

[Condition] Room temperature: 20°C
Outdoor temperature: 7/6°C
Cooling operation: At High fan

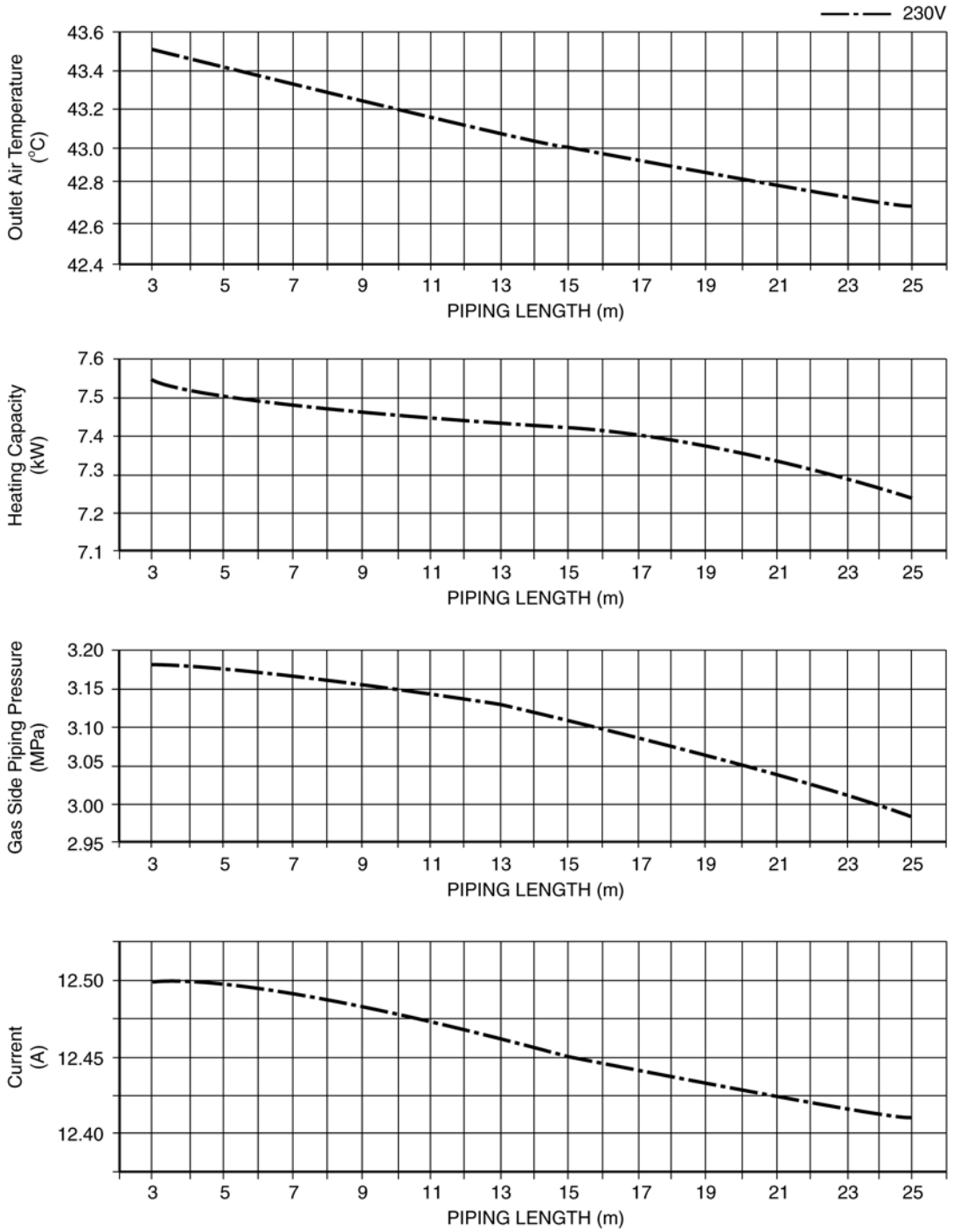

17 Exploded View and Replacement Parts List

17.1. Indoor Unit

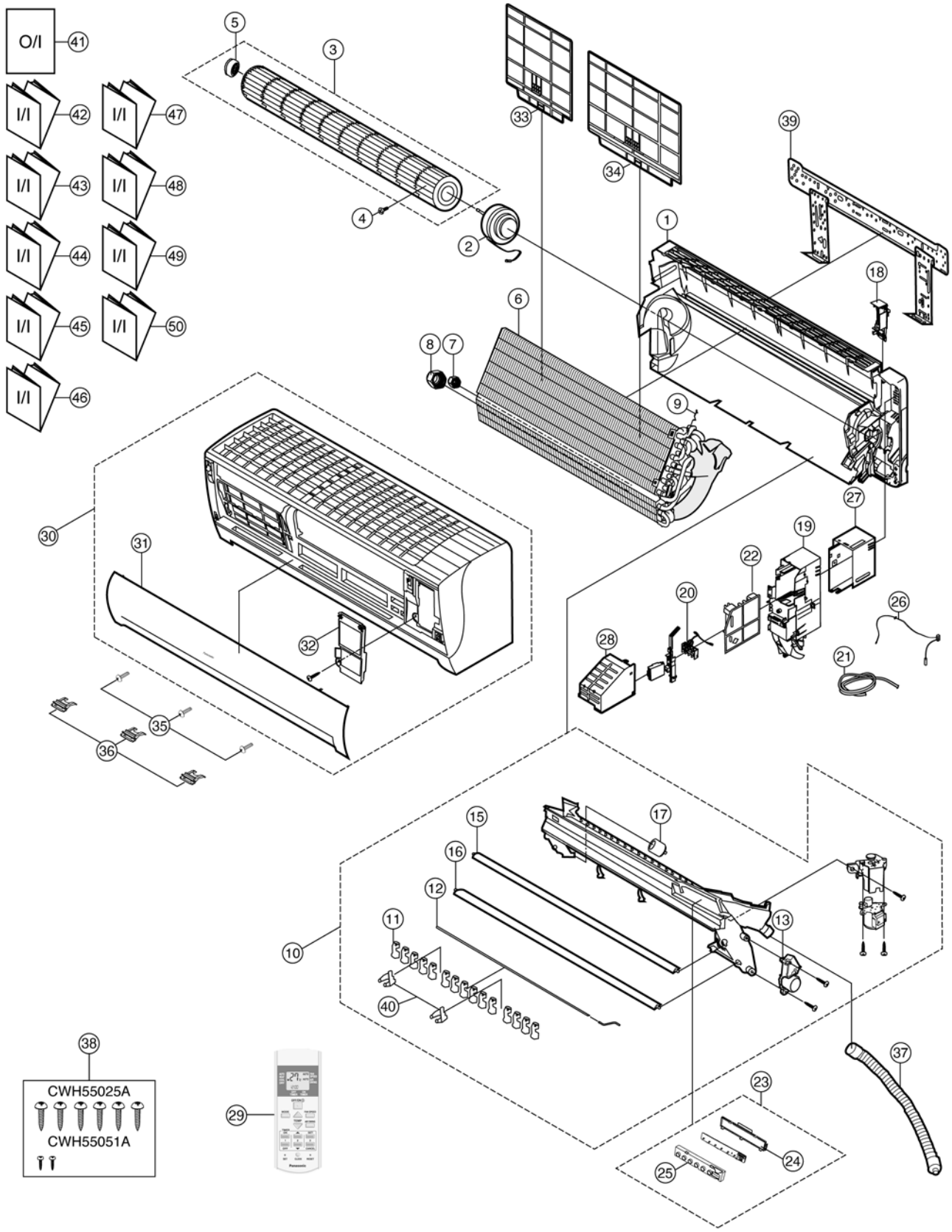

Note:
The above exploded view is for the purpose of parts disassembly and replacement.
The non-numbered parts are not kept as standard service parts.

REF NO.	PART NAME & DESCRIPTION	QTY.	CS-PW24JKE
1	CHASSY COMPLETE	1	CWD50C1394
2	FAN MOTOR, DC 30W 3PH	1	ARW51H8P30AC
3	CROSS FLOW FAN COMPLETE	1	CWH02C1010
4	SCREW - CROSS FLOW FAN	1	CWH551146
5	BEARING ASS'Y	1	CWH64K007
6	EVAPORATOR	1	CWB30C1644
7	FLARE NUT (LIQUID)	1	CWT251030
8	FLARE NUT (GAS)	1	CWT251033
9	HOLDER SENSOR	1	CWH32143
10	DISCHARGE GRILLE COMPLETE	1	CWE20C2695
11	VERTICAL VANE	15	CWE241088
12	CONNECTING BAR	1	CWE261025
13	AS MOTOR, DC SINGLE 12V 300OHM	1	CWA98K1009
15	HORIZONTAL VANE	1	CWE241152C
16	HORIZONTAL VANE	1	CWE241153C
17	CAP - DRAIN TRAY	1	CWH521096
18	BACK COVER CHASSIS	1	CWD932162B
19	CONTROL BOARD CASING	1	CWH102250
20	TERMINAL BOARD COMPLETE	1	CWA28C2358
21	POWER SUPPLY CORD	1	CWA20C2736
22	ELECTRONIC CONTROLLER - MAIN	1	CWA745625
23	INDICATOR COMPLETE	1	CWE39C1173
24	INDICATOR HOLDER	1	CWD932435
25	INDICATOR HOLDER	1	CWD932436
26	SENSOR COMPLETE	1	CWA50C2401
27	CONTROL BOARD TOP COVER	1	CWH131209
28	CONTROL BOARD FRONT COVER	1	CWH131210
29	REMOTE CONTROL COMPLETE	1	CWA75C2614
30	FRONT GRILLE COMPLETE	1	CWE11C3763
31	INTAKE GRILLE COMPLETE	1	CWE22C1336
32	GRILLE DOOR	1	CWE141076
33	AIR FILTER (L)	1	CWD001137
34	AIR FILTER (R)	1	CWD001138
35	SCREW - FRONT GRILLE	3	XTT4+16CFJ
36	CAP - FRONT GRILLE	3	CWH521062A
37	DRAIN HOSE	1	CWH851063
38	BAG COMPLETE - INSTALLATION SCREW	1	CWH82C067
39	INSTALLATION PLATE	1	CWH36K1007
40	FULCRUM	2	CWH621047
41	OPERATING INSTRUCTIONS	1	CWF566677
42	INSTALLATION INSTRUCTIONS	1	CWF613864
43	INSTALLATION INSTRUCTIONS	1	CWF613955
44	INSTALLATION INSTRUCTIONS	1	CWF613956
45	INSTALLATION INSTRUCTIONS	1	CWF613957
46	INSTALLATION INSTRUCTIONS	1	CWF613958
47	INSTALLATION INSTRUCTIONS	1	CWF613959
48	INSTALLATION INSTRUCTIONS	1	CWF613960
49	INSTALLATION INSTRUCTIONS	1	CWF613961
50	INSTALLATION INSTRUCTIONS	1	CWF613962

(Note)

- All parts are supplied from PHAAM, Malaysia (Vendor Code: 00029488).

17.2. Outdoor Unit

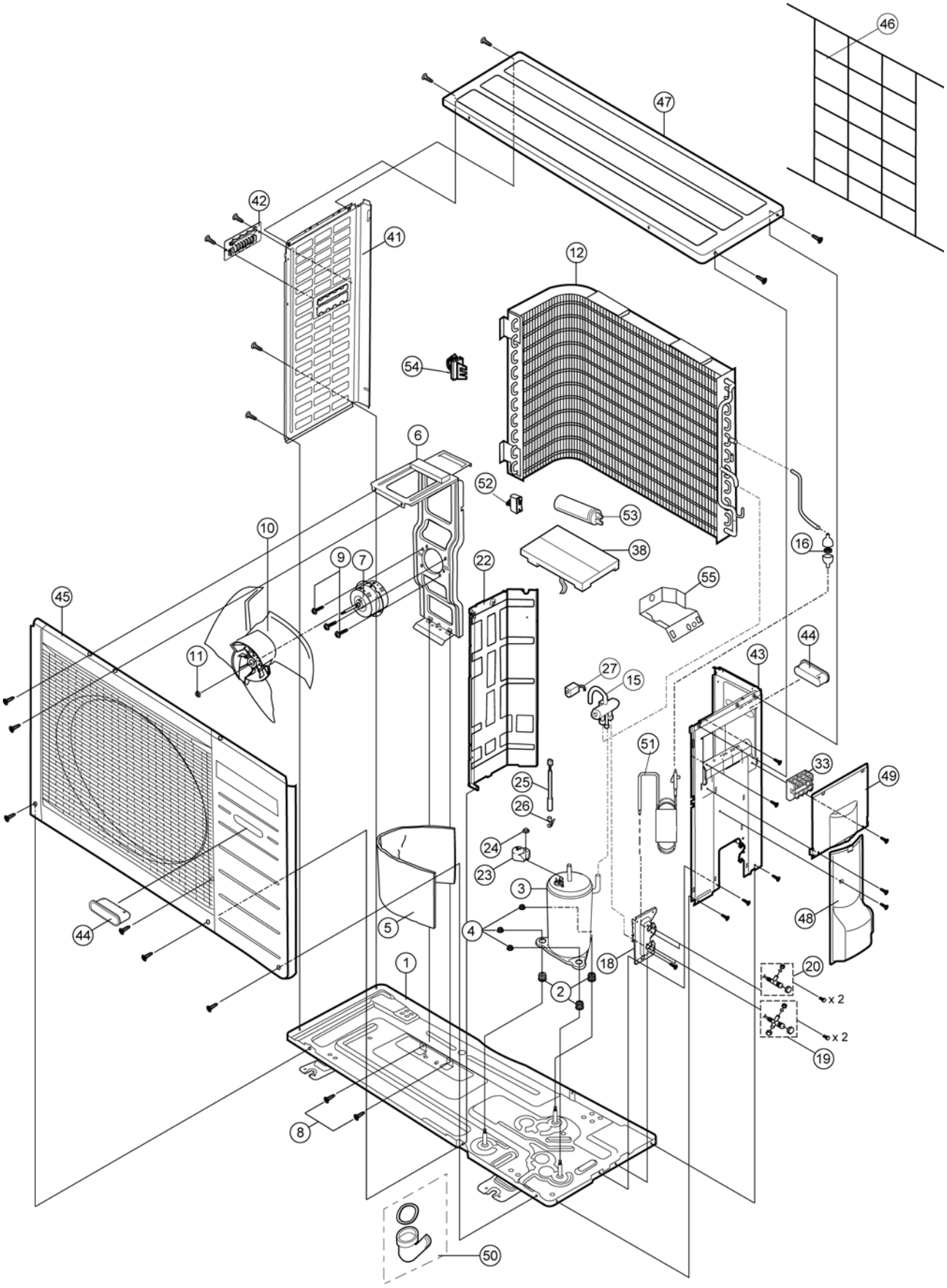

Note:
The above exploded view is for the purpose of parts disassembly and replacement.
The non-numbered parts are not kept as standard service parts.

REF. NO.	DESCRIPTION & NAME	QTY.	CU-PW24JKE
1	CHASSY ASS'Y	1	CWD50K2087
2	ANTI-VIBRATION BUSHING	3	CWH50055
3	COMPRESSOR	1	5JS315DAA21
4	NUT - COMPRESSOR MOUNT	3	CWH561049
5	SOUND PROOF MATERIAL	1	CWG302278
6	FAN MOTOR BRACKET	1	CWD541055
7	FAN MOTOR	1	CWA951385J
8	SCREW - FAN MOTOR BRACKET	2	CWH551217
9	SCREW - FAN MOTOR MOUNT	3	CWH55252J
10	PROPELLER FAN ASSY	1	CWH03K1017
11	NUT - PROPELLER FAN	1	CWH561038J
12	CONDENSER	1	CWB32C1586
15	4-WAYS VALVE	1	CWB001026J
16	STRAINER	1	CWB11025
18	HOLDER - COUPLING	1	CWH351036
19	3 WAYS VALVE (GAS)	1	CWB011363
20	2 WAYS VALVE (LIQUID)	1	CWB021283
22	SOUND PROOF BOARD	1	CWH151051
23	TERMINAL COVER	1	CWH171012
24	NUT - TERMINAL COVER	1	CWH7080300J
25	SENSOR CO-OUTDOOR COMPRESSOR TEMP	1	CWA50C2396
26	HOLDER SENSOR	1	CWH32074
27	V-COIL COMPLETE	1	CWA43C2121J
33	TERMINAL BOARD ASSY	1	CWA28K1070J
38	ELECTRONIC CONTROLLER - MAIN	1	CWA743383
41	CABINET SIDE PLATE (LEFT)	1	CWE041082A
42	HANDLE	1	CWE161010
43	CABINET SIDE PLATE (R)	1	CWE041083A
44	HANDLE	2	CWE16000E
45	CABINET FRONT PLATE CO.	1	CWE06K1043
46	WIRE NET	1	CWD041041A
47	CABINET TOP PLATE	1	CWE03K1011A
48	CONTROL BOARD COVER (BOTTOM)	1	CWH131168
49	CONTROL BOARD COVER (RIGHT-TOP)	1	CWH131169A
50	ACCESSORY CO. (DRAIN ELBOW)	1	CWG87C900
51	TUBE ASSY (CAP.TUBE)	1	CWT01C3157
52	CAPACITOR	1	DS441355NPQA
53	CAPACITOR	1	CWA312079
54	HOLDER SENSOR	1	CWH32089
55	CONTROL BOARD FOR PCB	1	CWH102206

(Note)
- All parts are supplied from PHAAM, Malaysia (Vendor Code: 00029488).

[PHAAM] Printed in Malaysia
SFSC0906 - 03