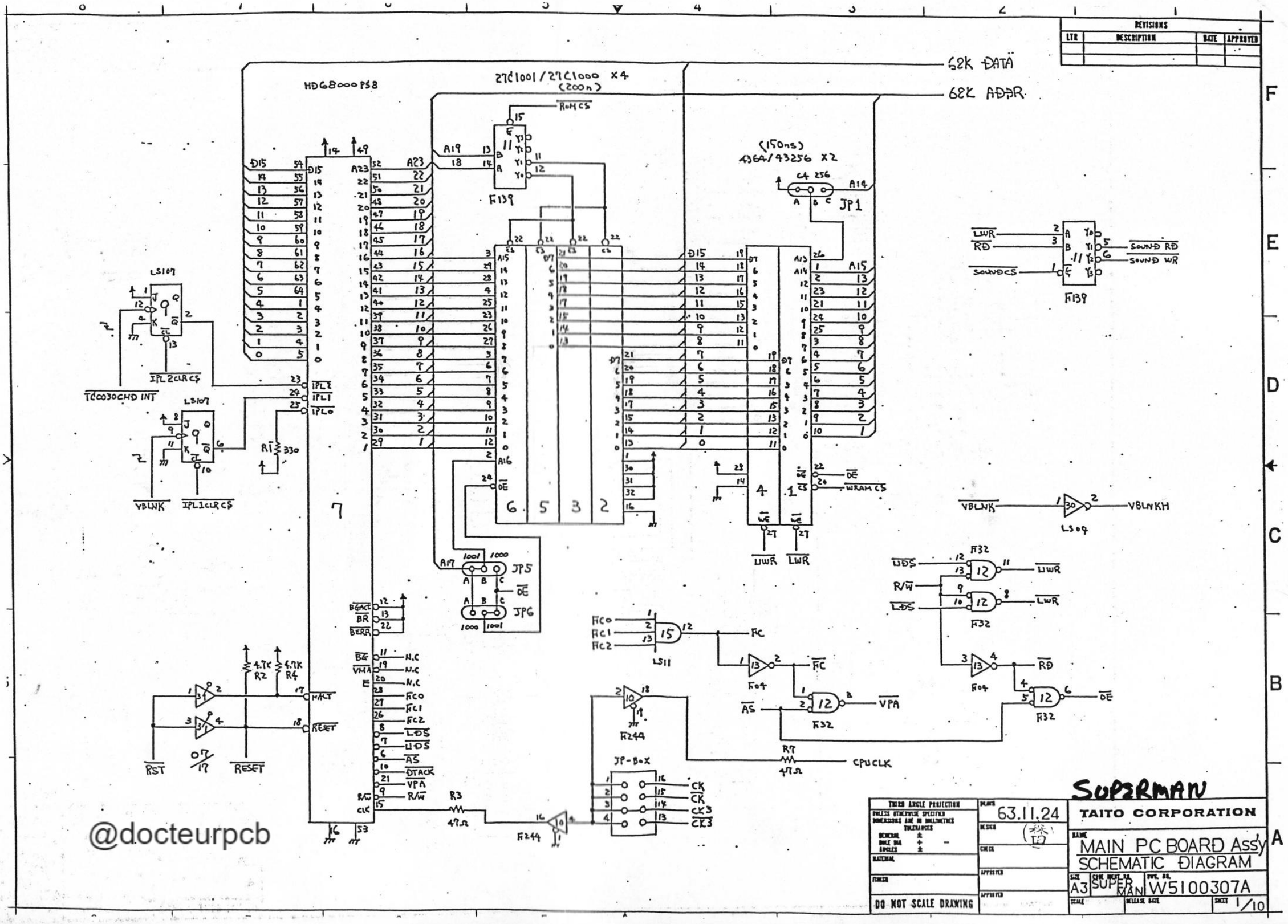

REVISIONS
LTR
DESCRIPTION
DATE
APPROVED
HD68000PS8
27C1001/27C1000 X4
(200n)
62K DATA
62K ADDR
(150ns)
4364/43256 X2
JP1
JP5
JP6
JP-BOX
LS107
LS04
LS11
F139
F32
F04
F244
TC0030CMD INT
IPL2CLRCS
IPL1CLRCS
VBLNK
VBLNKH
SOUND RD
SOUND WR
SOUNDCS
WRAM CS
UWR
LWR
RD
OE
CPUCLK
RST
RESET
HALT
R1 330
R2 4.7K
R4 4.7K
R3 47Ω
R7 47Ω
SUPERMAN
TAITO CORPORATION
MAIN PC BOARD Ass'y
SCHEMATIC DIAGRAM
63.11.24
A3
SUPER MAN
W5100307A
1/10
DO NOT SCALE DRAWING

@docteurpcb

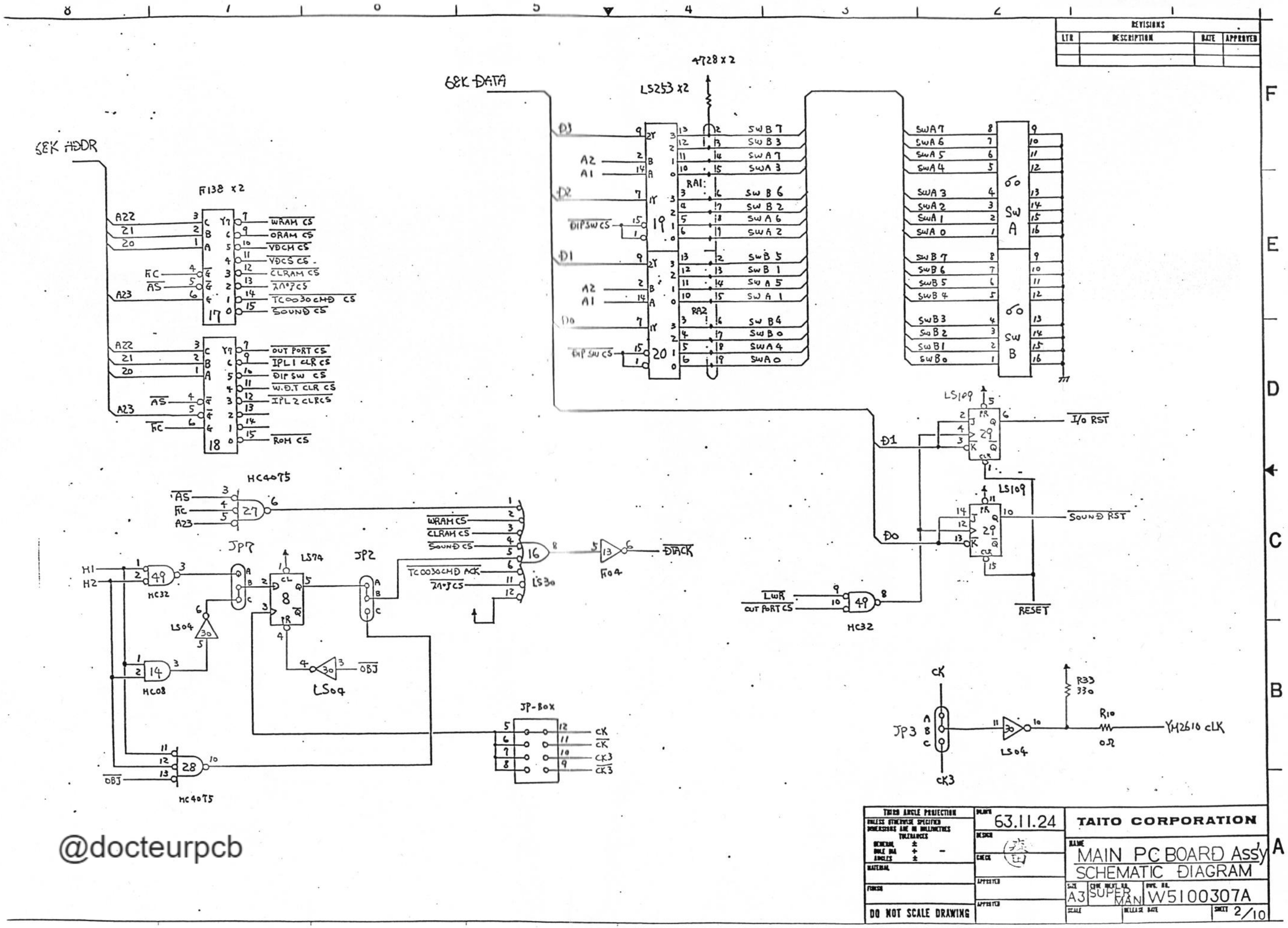

REVISIONS
LTR
DESCRIPTION
DATE
APPROVED
68K ADDR
68K DATA
F138 x2
LS253 x2
4728 x2
HC4075
JP7
LS74
JP2
LS30
F04
HC32
HC08
LS04
JP-BOX
LS109
I/O RST
SOUND RST
RESET
LWR
OUT PORT CS
CK
CK3
JP3
R33
330
R10
0Ω
YM2610 CLK
THIRD ANGLE PROJECTION
DO NOT SCALE DRAWING
63.11.24
TAITO CORPORATION
MAIN PC BOARD Ass'y
SCHEMATIC DIAGRAM
A3
SUPER MAN
W5100307A
2/10

@docteurpcb

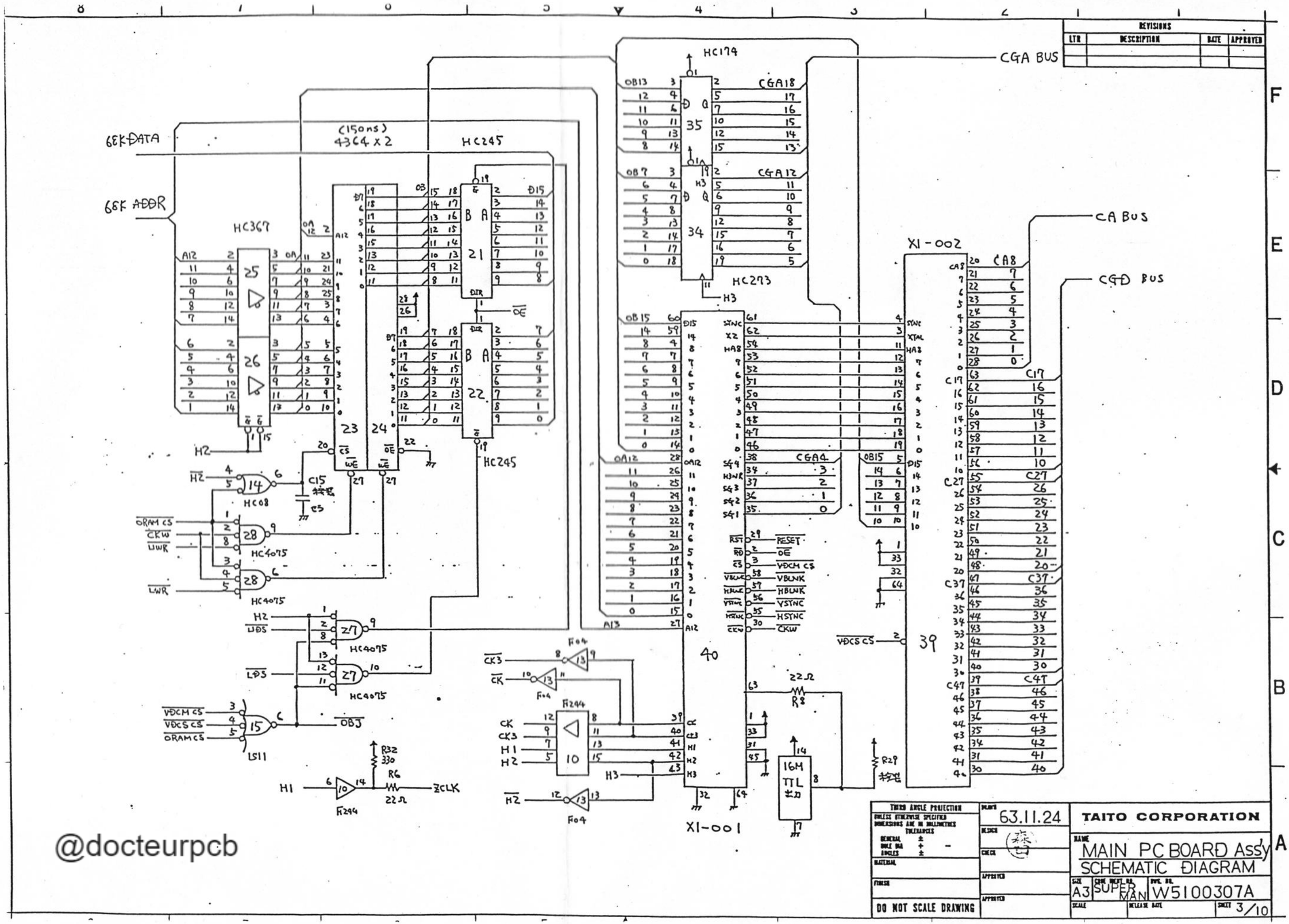

REVISIONS
LTR
DESCRIPTION
DATE
APPROVED
68K DATA
68K ADDR
(150ns)
4364 x 2
HC367
HC245
HC174
HC273
CGA BUS
CA BUS
CGD BUS
X1-002
X1-001
HC08
HC4075
LS11
F244
F04
16M
TTL
R8
R29
R32
R6
22Ω
ZCLK
OBJ
VDCM CS
VDCS CS
ORAM CS
CKW
LWR
UDS
LDS
H1
H2
H3
CK
CK3
RESET
OE
VBLNK
HBLNK
VSTNC
HSTNC
CGA18
CGA12
CGA4
CA8
C17
C27
C37
C47
THIRD ANGLE PROJECTION
UNLESS OTHERWISE SPECIFIED DIMENSIONS ARE IN MILLIMETRES
TOLERANCES
GENERAL ±
HOLE DIA + −
ANGLES ±
MATERIAL
FINISH
DO NOT SCALE DRAWING
DRAWN 63.11.24
DESIGN
CHECK
APPROVED
APPROVED
TAITO CORPORATION
NAME
MAIN PC BOARD Ass'y
SCHEMATIC DIAGRAM
SIZE A3
CODE IDENT NO. SUPER MAN
DWG. NO. W5100307A
SCALE
RELEASE DATE
SHEET 3/10

@docteurpcb

REVISIONS			
LTR	DESCRIPTION	DATE	APPROVED

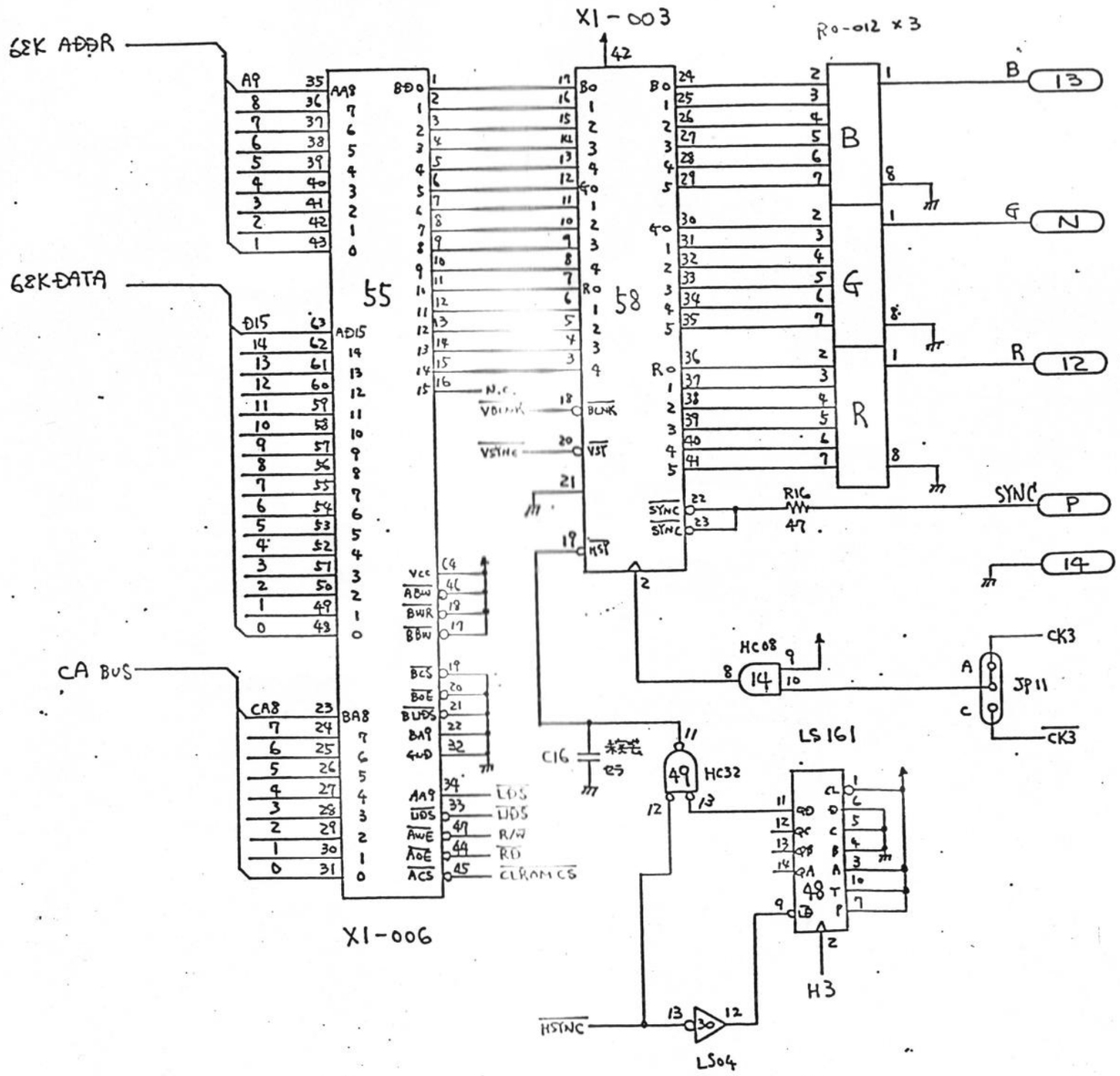

@docteurpcb

THIRD ANGLE PROJECTION UNLESS OTHERWISE SPECIFIED DIMENSIONS ARE IN MILLIMETRES TOLERANCES GENERAL ± DBLE DIA + − ANGLES ± MATERIAL FINISH DO NOT SCALE DRAWING	DRAWN 63.11.24 DESIGN CHECK APPROVED APPROVED	TAITO CORPORATION NAME MAIN PC BOARD Assy SCHEMATIC DIAGRAM SIZE A3 · CODE IDENT. NO. SUPER MAN · DWG. NO. W5100307A SCALE · RELEASE DATE · SHEET 4/10

REVISIONS			
LTR	DESCRIPTION	DATE	APPROVED

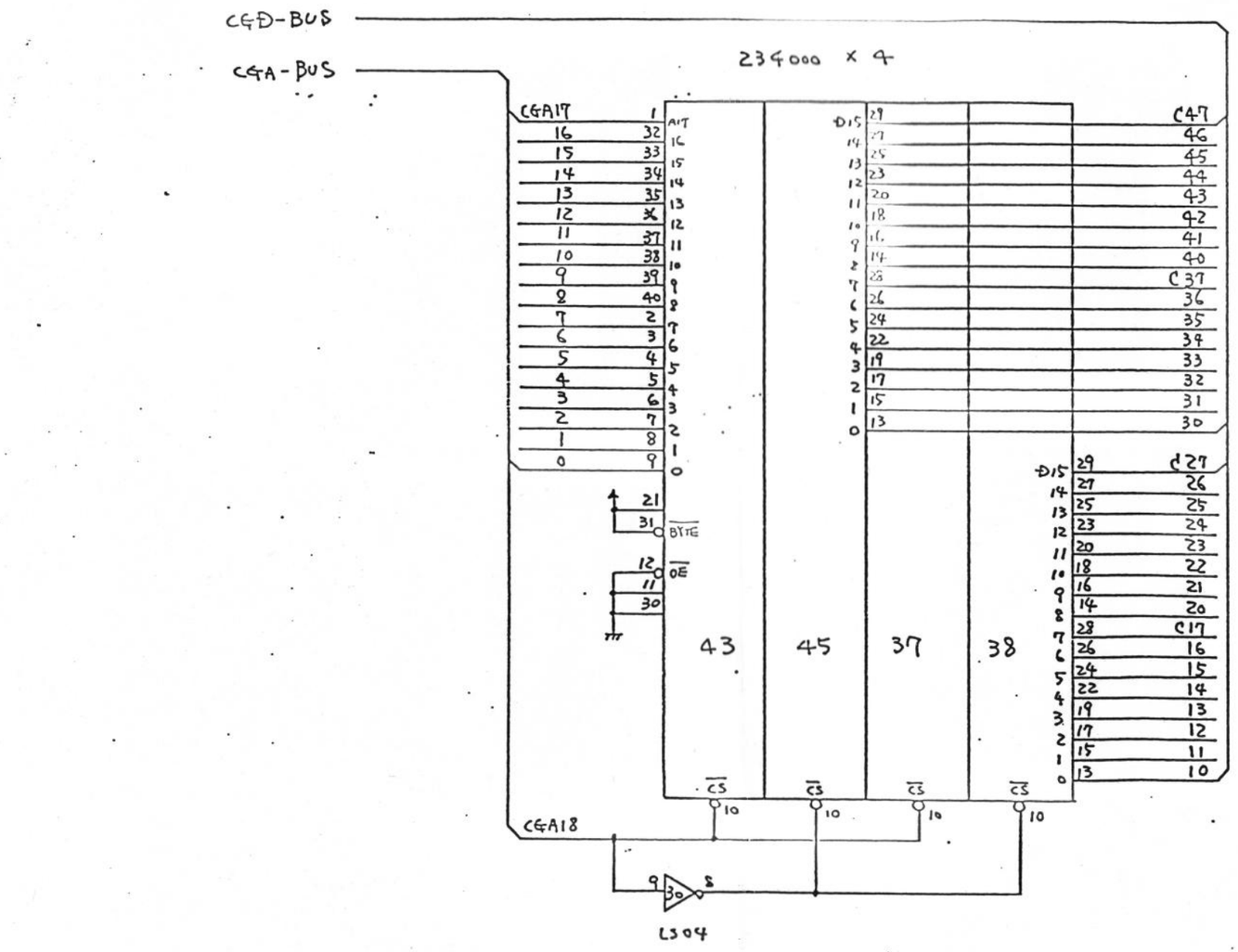

@docteurpcb

THIRD ANGLE PROJECTION UNLESS OTHERWISE SPECIFIED DIMENSIONS ARE IN MILLIMETRES TOLERANCES GENERAL ± HOLE DIA + − ANGLES ± MATERIAL FINISH DO NOT SCALE DRAWING	DRAWN 63.11.24 DESIGN CHECK APPROVED APPROVED	TAITO CORPORATION NAME MAIN PC BOARD Assy SCHEMATIC DIAGRAM SIZE A3 · SAME SHEET NO. SUPER MAN · DWG. NO. W5100307A SCALE · RELEASE DATE · SHEET 5/10

REVISIONS			
LTR	DESCRIPTION	DATE	APPROVED

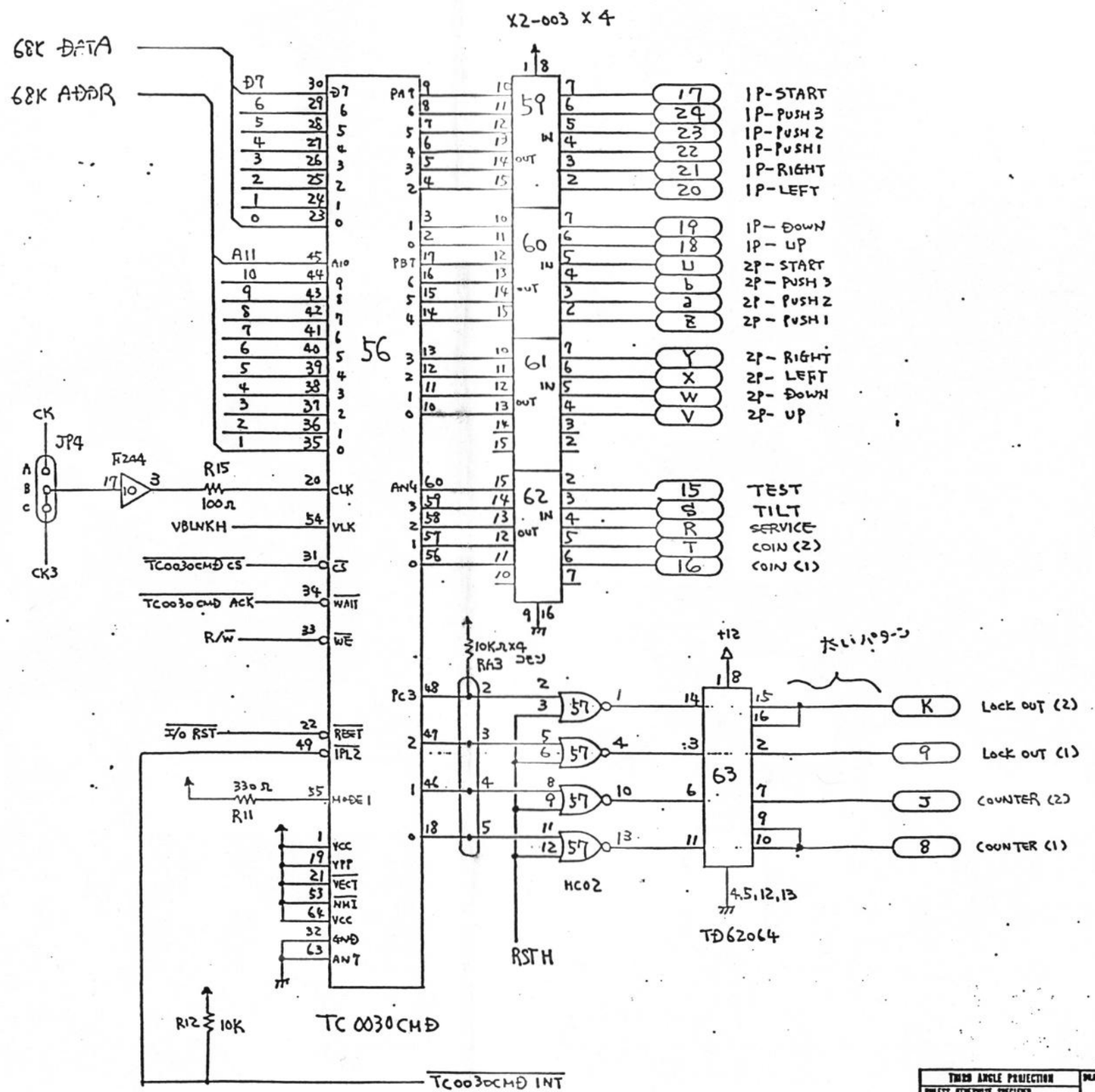

@docteurpcb

THIRD ANGLE PROJECTION UNLESS OTHERWISE SPECIFIED DIMENSIONS ARE IN MILLIMETRES TOLERANCES GENERAL ± DBLE DIA + − ANGLES ± MATERIAL FINISH DO NOT SCALE DRAWING	DRAWN 63.11.24 DESIGN CHECK APPROVED APPROVED	TAITO CORPORATION NAME MAIN PC BOARD Ass'y SCHEMATIC DIAGRAM SIZE A3 · SAME NEXT ASS'Y SUPER MAN · DWG. NO. W5100307A SCALE · RELEASE DATE · SHEET 6/10

REVISIONS			
LTR	DESCRIPTION	DATE	APPROVED

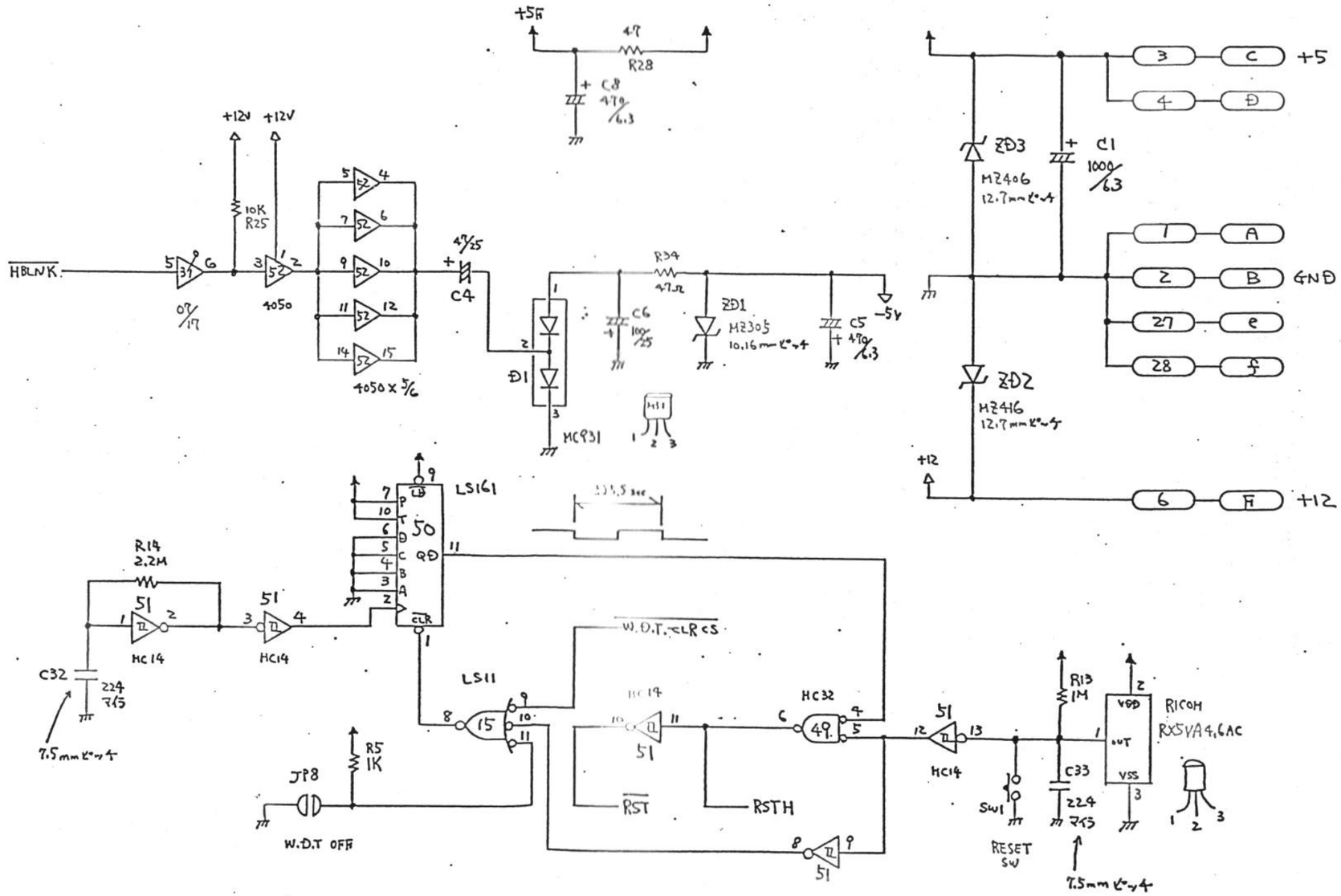

@docteurpcb

THIRD ANGLE PROJECTION UNLESS OTHERWISE SPECIFIED DIMENSIONS ARE IN MILLIMETRES TOLERANCES DECIMAL ± ANGLES ± MATERIAL FINISH DO NOT SCALE DRAWING	DRAWN 63.11.24 DESIGN CHECK APPROVED APPROVED	TAITO CORPORATION NAME MAIN PC BOARD Ass'y SCHEMATIC DIAGRAM SIZE A3 · SUPER MAN · DWG. NO. W5100307A SCALE · RELEASE DATE · SHEET 7/10

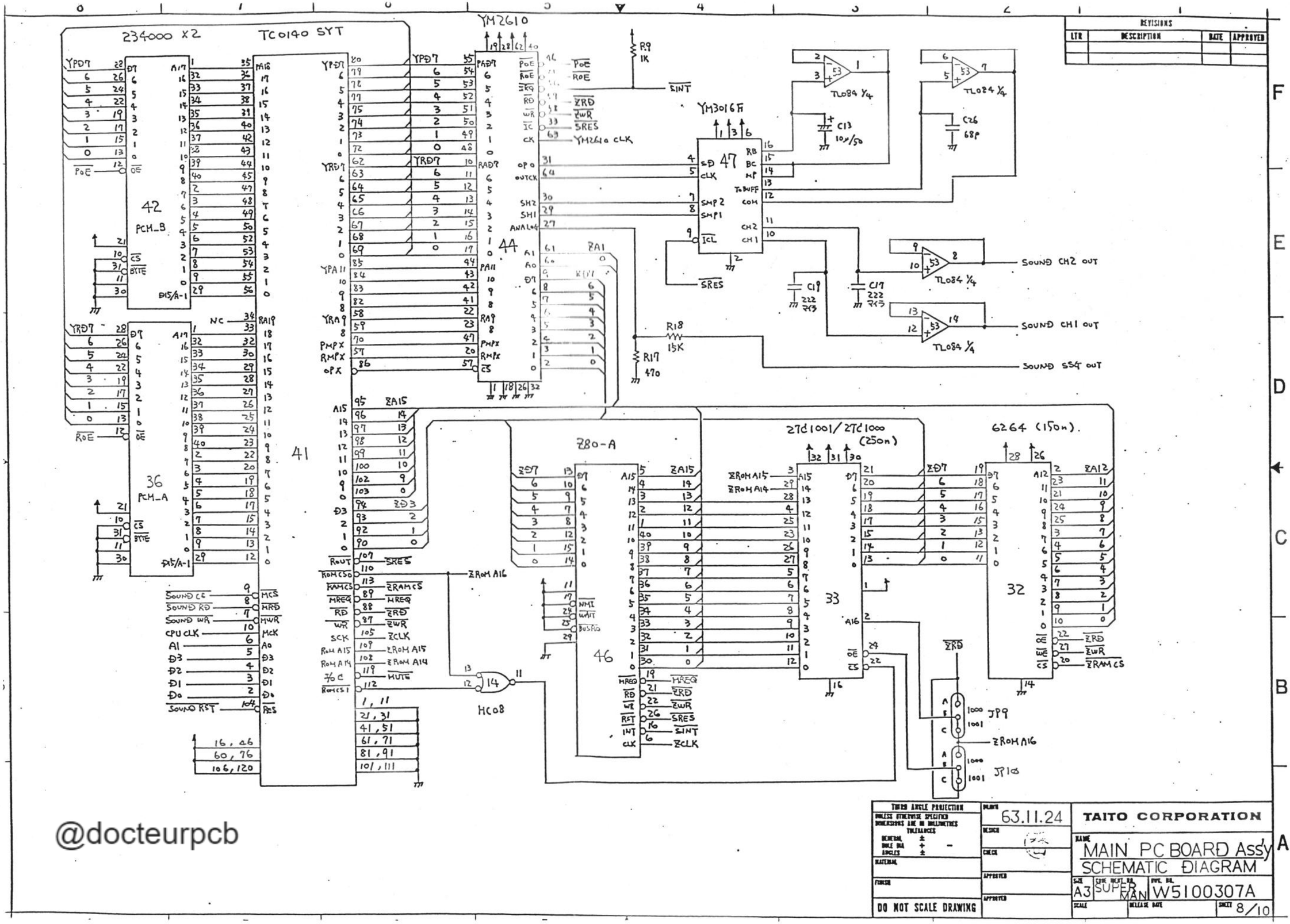

234000 X2
TC0140 SYT
YM2610
YM3016F
42
PCM_B
36
PCM_A
41
44
47
46
Z80-A
27C1001/27C1000 (250n)
6264 (150n)
33
32
14
HC08
TL084 1/4
SOUND CH2 OUT
SOUND CH1 OUT
SOUND SSG OUT
SINT
SRES
ZROM A16
JP9
JP10
REVISIONS
LTR
DESCRIPTION
DATE
APPROVED
THIRD ANGLE PROJECTION
DO NOT SCALE DRAWING
63.11.24
TAITO CORPORATION
MAIN PC BOARD Ass'y
SCHEMATIC DIAGRAM
A3
SUPER MAN
W5100307A
8/10

@docteurpcb

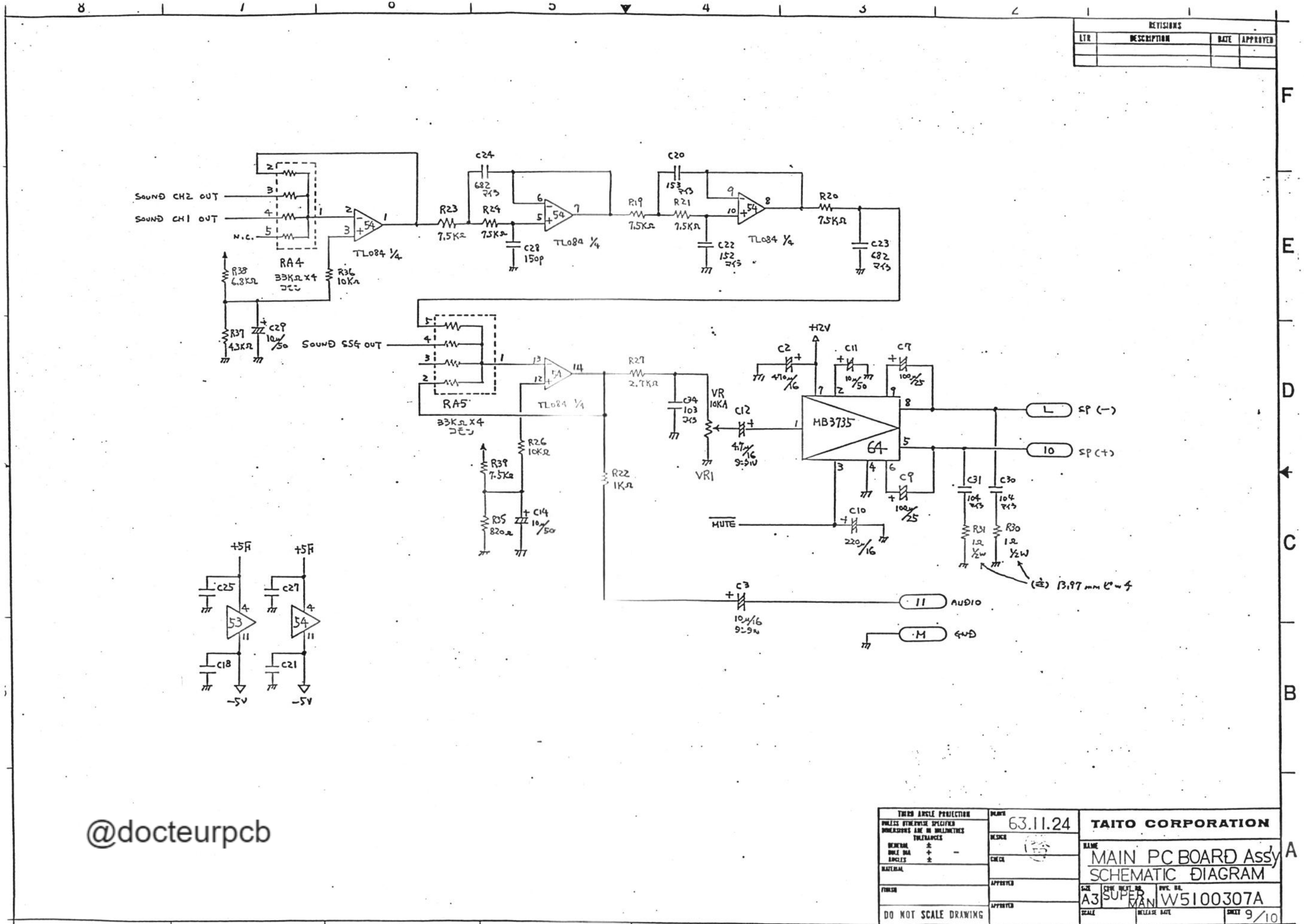

@docteurpcb

THIRD ANGLE PROJECTION
UNLESS OTHERWISE SPECIFIED DIMENSIONS ARE IN MILLIMETRES
TOLERANCES
GENERAL ±
HOLE DIA + −
ANGLES ±
MATERIAL
FINISH
DO NOT SCALE DRAWING

DRAWN 63.11.24
DESIGN
CHECK
APPROVED
APPROVED

TAITO CORPORATION

NAME MAIN PC BOARD Ass'y SCHEMATIC DIAGRAM

SIZE A3 | CODE IDENT NO. SUPER MAN | DWG. NO. W5100307A

SCALE | RELEASE DATE | SHEET 9/10

REVISIONS			
LTR	DESCRIPTION	DATE	APPROVED

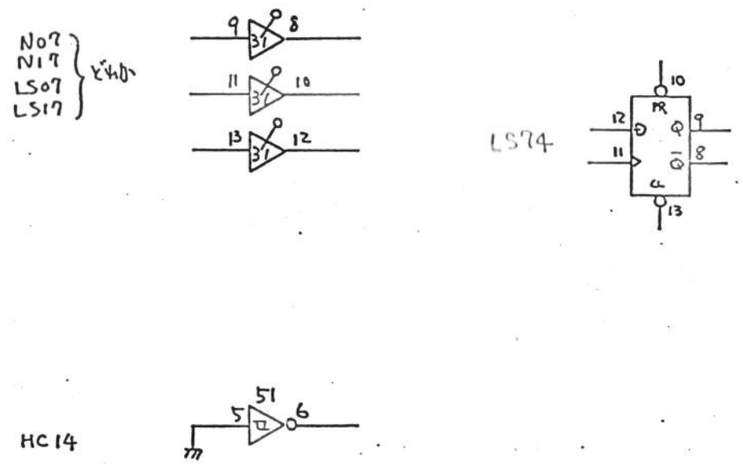

特に指定のないコンデンサ → 5mmピッチ
特に指定のない抵抗 → 6.36mmピッチ

@docteurpcb

THIRD ANGLE PROJECTION UNLESS OTHERWISE SPECIFIED DIMENSIONS ARE IN MILLIMETRES TOLERANCES GENERAL ± HOLE DIA + − ANGLES ±	DRAWN 63.11.24 DESIGN CHECK APPROVED APPROVED	TAITO CORPORATION NAME MAIN PC BOARD Ass'y SCHEMATIC DIAGRAM SIZE A3 · CODE IDENT NO. SUPER MAN · DWG. NO. W5100307A SCALE · RELEASE DATE · SHEET 10/10
MATERIAL FINISH DO NOT SCALE DRAWING		