SNK CORPORATION OF AMERICA

POW

Dear Operator,

Thank you for purchasing SNK's Prisoners of War game and taking the time to return the response card in the manual. We appreciate all of the comments that you included. Your firm has been added to a mailing list for technical information and service bulletins. Many of you have already received service bulletins as a result of this program.

Please accept the Technical Manual included with this letter. The manual has been arranged into three sections; technical information, specific game information, and service bulletins. We punched it so you can install it into a 3 ring binder. We chose this method as it will allow you to easily store this information and insert additional pages as they are published. You will notice that all of the available Service Bulletins have also been included. If more service bulletins are published, we will send them to you to insert into your manual. If games developed in the future utilize the same hardware system, we will update this manual by sending you the necessary pages.

It is our desire to support you with the information that you require to successfully operate SNK games. We hope that this manual will help you achieve that goal. Please feel free to contact our technical support staff at any time if we can be of assistance to you.

Thank you again and if SNK can be of any assistance to you, please do not hesitate to contact us.

Sincerely,

Neal R. Zook
Director of Operations

246 Sobrante Way • Sunnyvale, CA 94086 • TEL: (408) 736-8844 • FAX: (408) 736-0446

SNK TECHNICAL SUPPORT MANUAL

68000 CPU HARDWARE SYSTEM

TABLE OF CONTENTS

I. TECHNICAL INFORMATION

SCHEMATIC DIAGRAMS, A7008 CPU PCB.

SCHEMATIC DIAGRAMS, A7008 SUB PCB.

PHYSICAL DIAGRAMS.

II. GAME INFORMATION

PRISONERS OF WAR

III. SERVICE BULLETINS & UPDATES

©1988 SNK CORPORATION OF AMERICA
246 SOBRANTE WAY
SUNNYVALE, CA 94086

FIRST PRINTING:
NOVEMBER 10, 1988

INTRODUCTION

This manual was written to assist Electronic Technicians in the servicing of SNK games using the 68000 CPU Hardware System. This system was developed for the Prisoners of War™ game, and may be used for future products as well. We have organized the manual into 4 sections, schematic diagrams, physical layout diagrams, game specific information, and field service updates. This will allow you to easily insert additional pages as they are published and keep all of your related information organized.

This manual is intended to be used by qualified Electronic Technicians to assist in the repair of these PCBs. It should be noted that any unauthorized repairs, or attempted repair without specific consent of SNK Corporation of America will void the factory warranty. Any damage caused by an unauthorized repair or attempted repair will not be covered under the factory warranty, and the customer will be liable for the cost of repair or replacement.

WARNING: The A7008 PCB utilizes a 4 layer Printed Circuit Board. Extreme care must be used when attempting to remove and replace components on this type of PCB to avoid damaging the inner traces. Improperly performed rework will result in permanent damage to the PCB.

SNK Corporation of America staffs a full-time Technical Service department. SNK's technical staff is available for telephone consultation and offer competitive PCB repair services. For information on these services, please call SNK Corporation of America during the hours of 8:00 a.m. to 5:00 p.m. (Pacific Standard Time), Monday thru Firday, at (408) 736-8844.

This manual is Copyright 1988 by SNK Corporation of America. SNK Corporation of America reserves the right to change or update the contents of this manual at any time without prior notification. All attempts to ensure accuracy have been taken, and no warrantees are implied in regards to the accuracy of this publication.

I. TECHNICAL INFORMATION

SCHEMATIC DIAGRAMS, A7008 CPU PCB.

1. MASTER CLOCK 1
2. MASTER CPU 2
3. SPRITE VIDEO 1 3
4. SPRITE VIDEO 2 4
5. SPRITE VIDEO 3 5
6. SPRITE VIDEO 4 6
7. FIX VIDEO 7
8. VIDEO SUMMING, COLOR OUTPUT 8
9. INPUT/OUTPUT PORTS 9
10. MASK ROM 10
11. SOUND 11

SCHEMATIC DIAGRAMS, A7008 SUB PCB.

1. MEMORY SUB PCB 12

PHYSICAL DIAGRAMS

1. A7008 CPU PCB 13
2. A7008 SUB PCB 14
3. EDGE CONNECTOR PIN-OUT 15

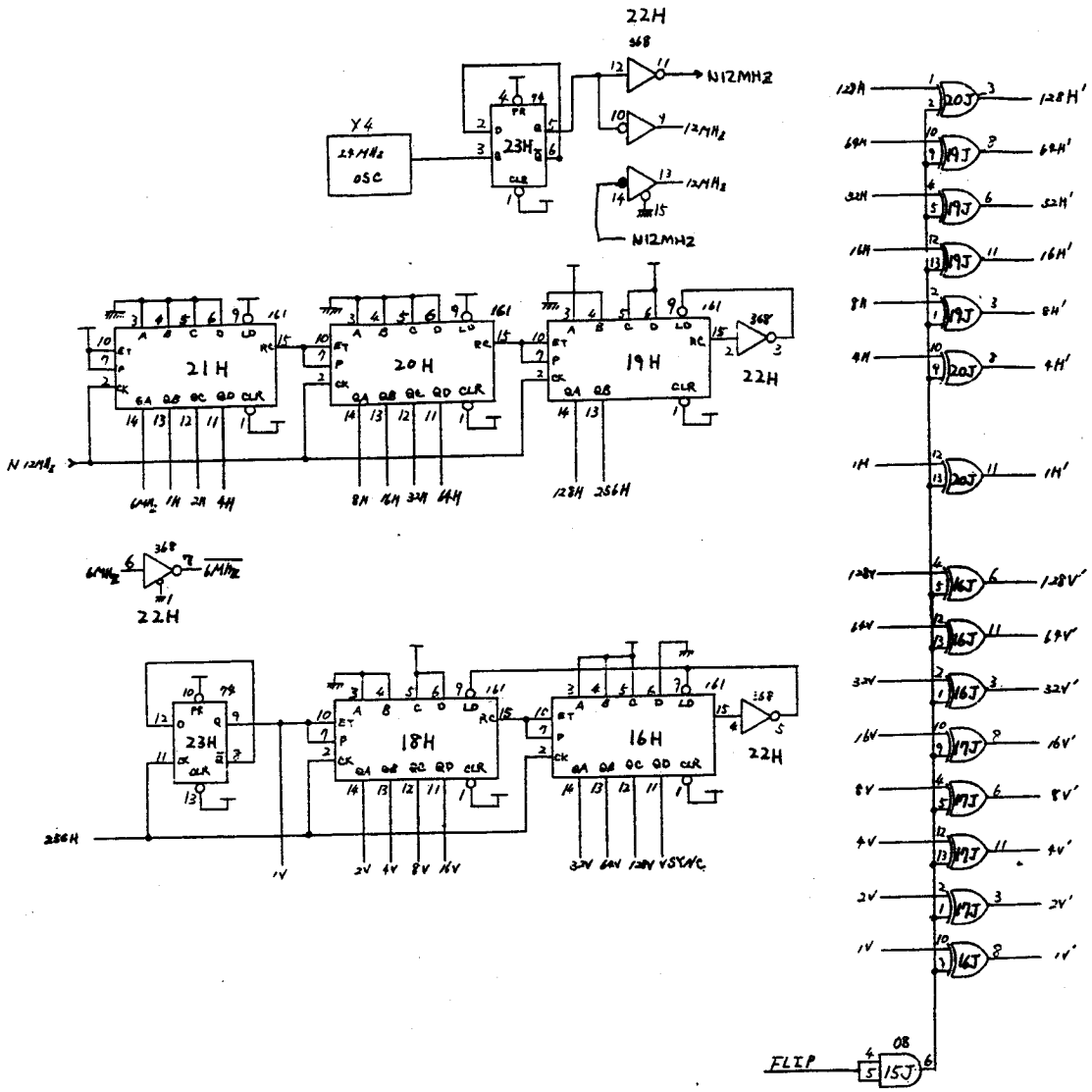
22H
Y4
23H
N12MH2
21H
20H
19H
22H
N 12MH2
64H 1H 2H 4H
8H 16H 32H 64H
128H 256H
64MHz
22H
23H
18H
16H
22H
256H
1V
2V 4V 8V 16V
32V 64V 128V VSYNC
128H
64H
32H
16H
8H
4H
1H
128V
64V
32V
16V
8V
4V
2V
1V
FLIP
128H'
64H'
32H'
16H'
8H'
4H'
1H'
128V'
64V'
32V'
16V'
8V'
4V'
2V'
1V'

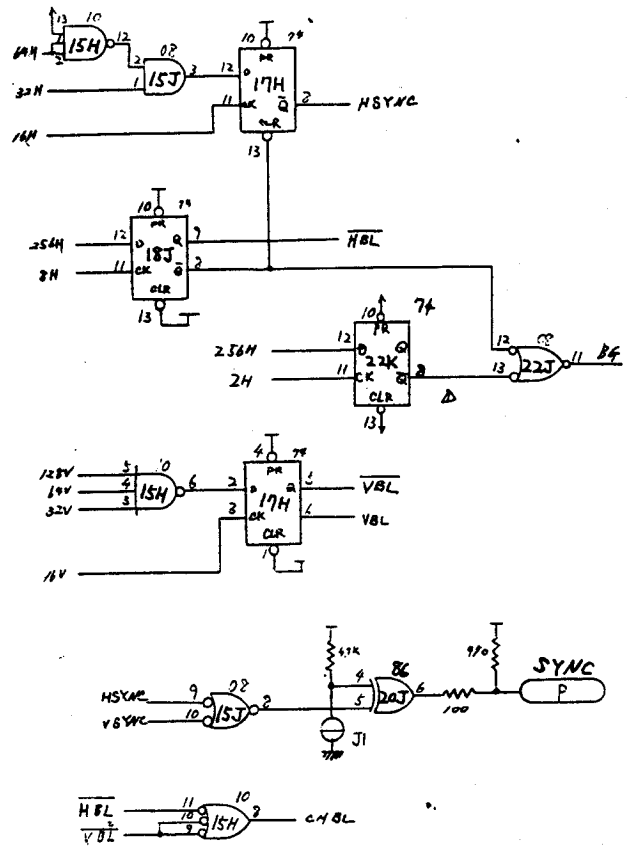

MASTER CLOCK PAGE 1

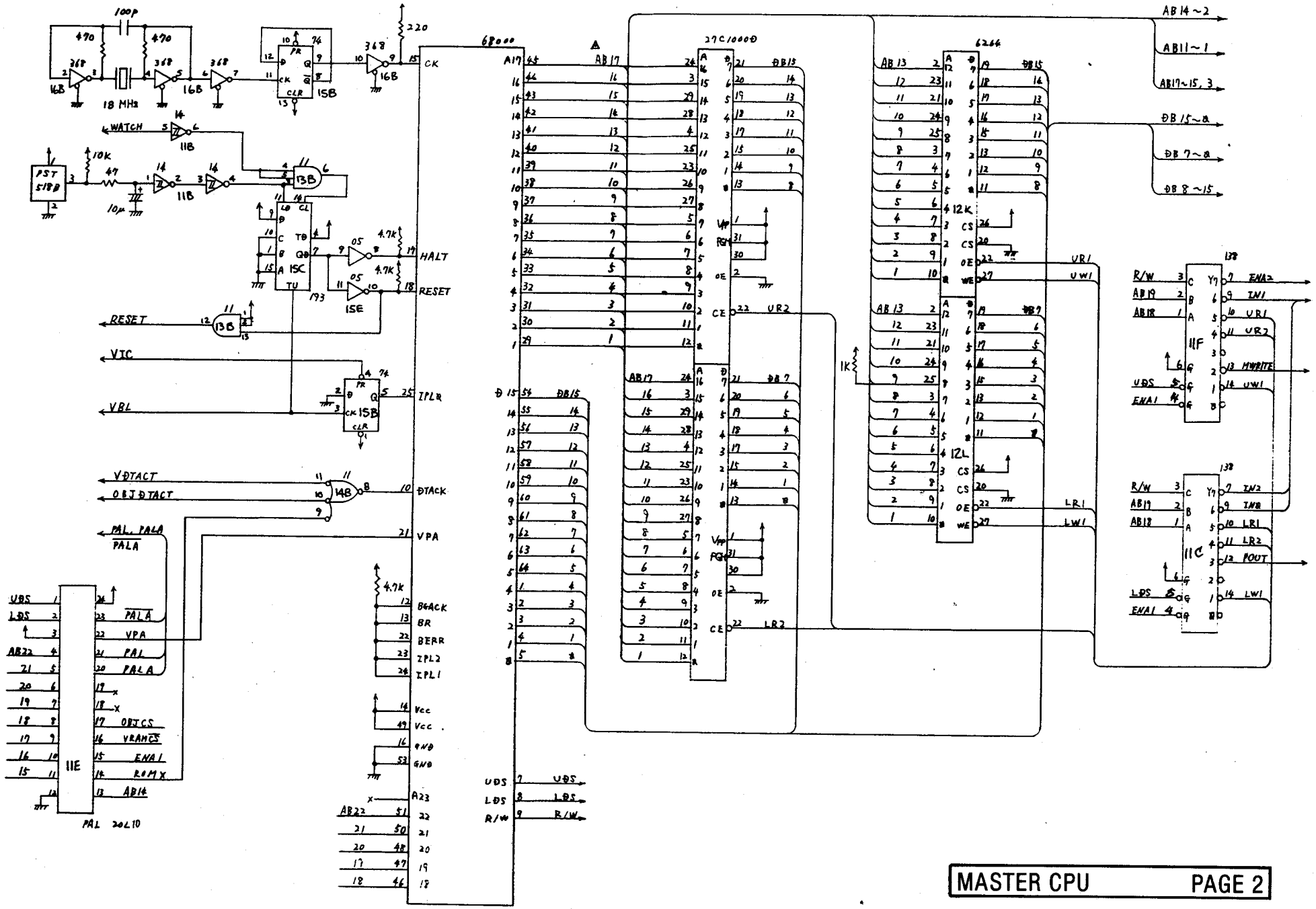

MASTER CPU PAGE 2

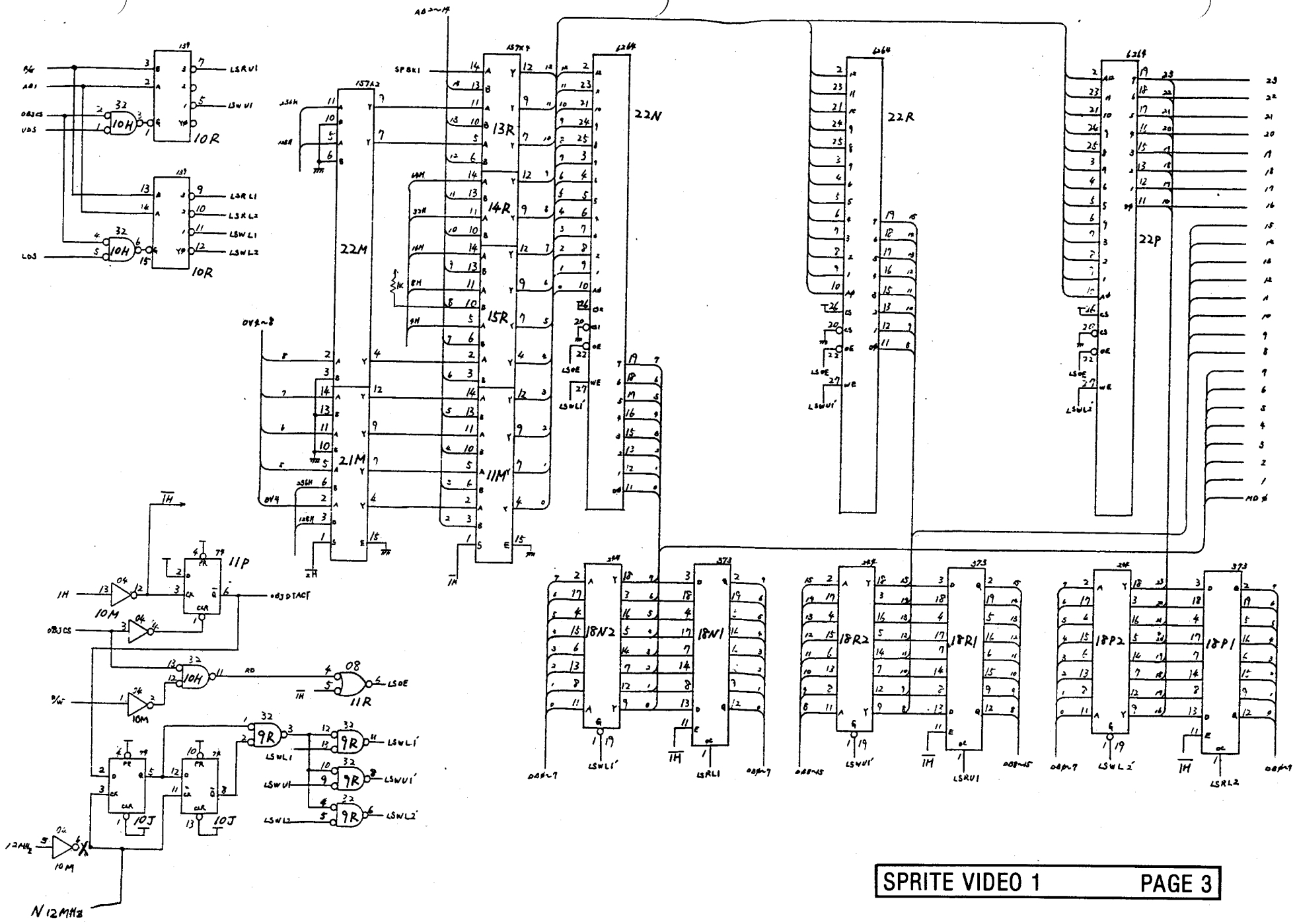

SPRITE VIDEO 1 PAGE 3

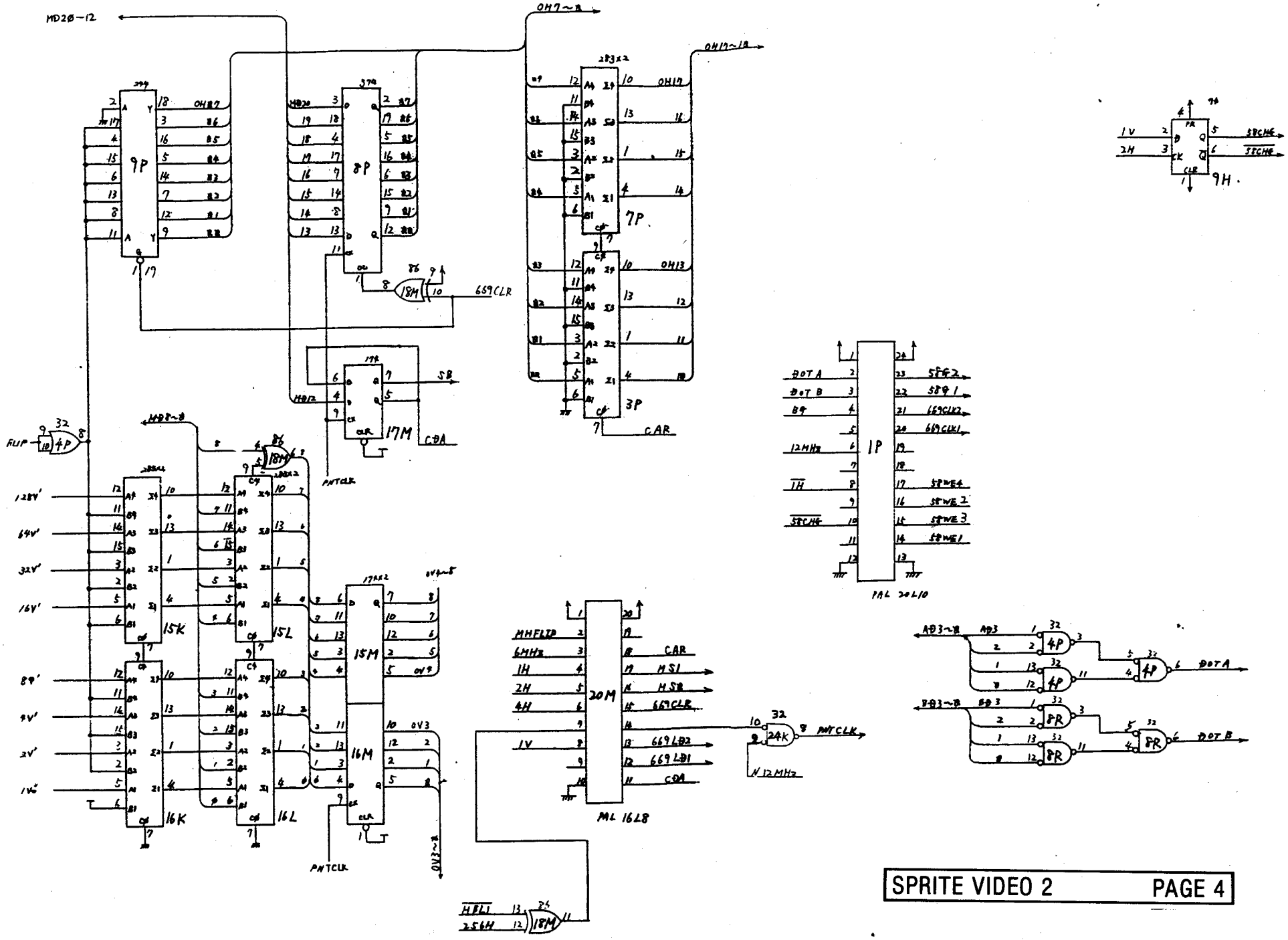

SPRITE VIDEO 2 PAGE 4

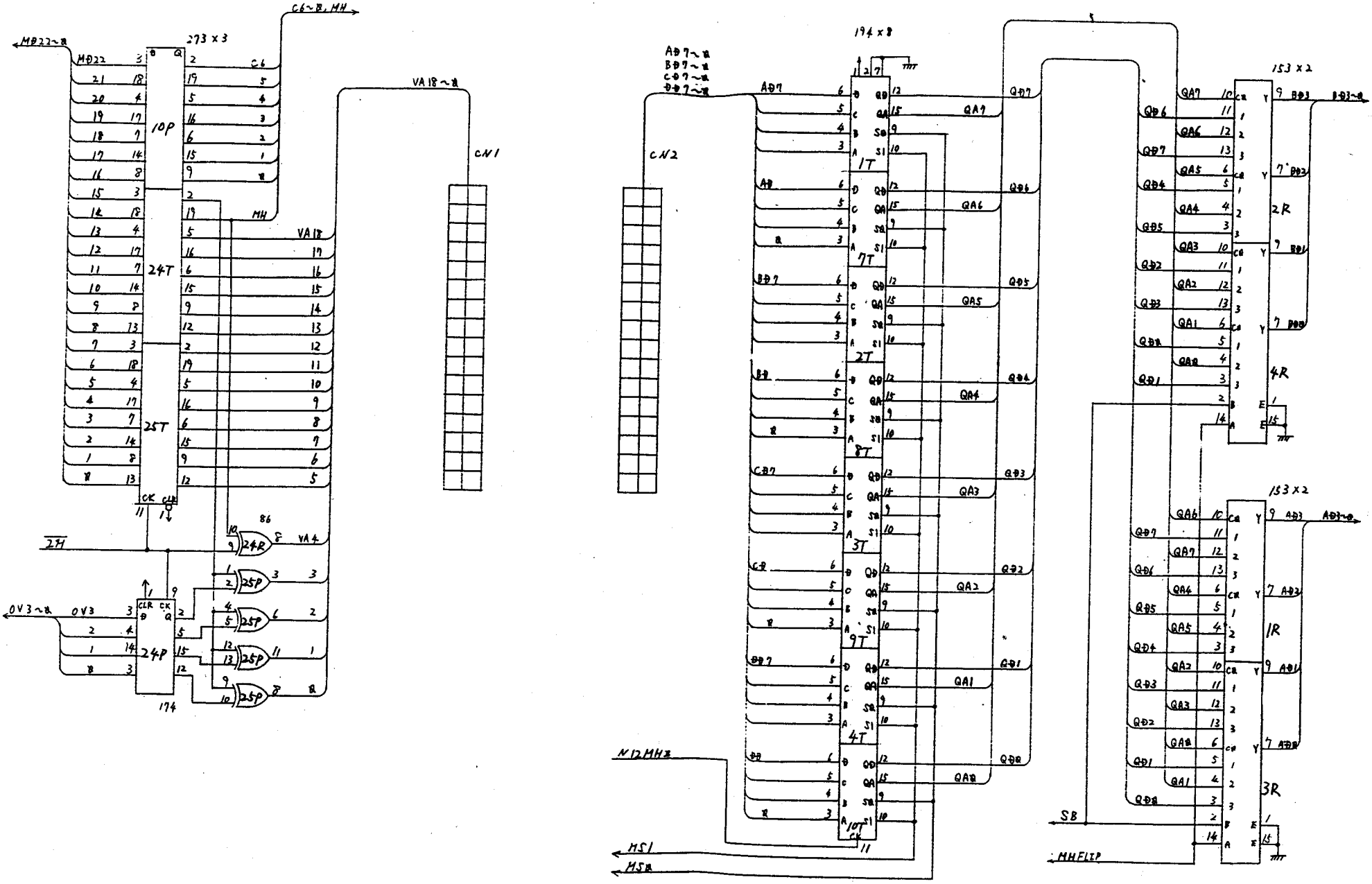

SPRITE VIDEO 3 PAGE 5

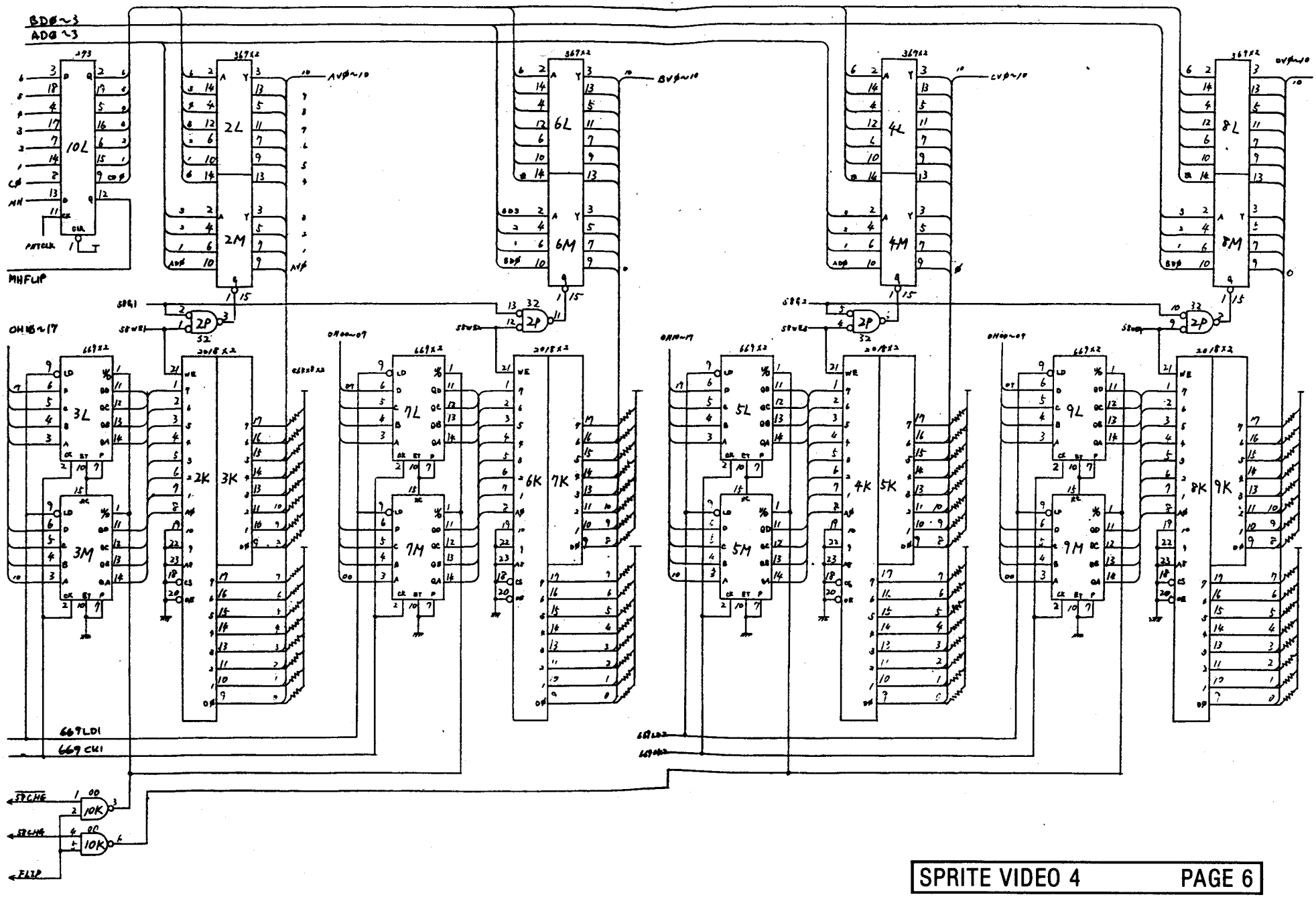
BD0~3
AD0~3
10L
2L
2M
6L
6M
4L
4M
8L
8M
MHFLIP
OH16~17
OH00~07
3L
3M
7L
7M
5L
5M
9L
9M
2K
3K
6K
7K
4K
5K
8K
9K
669LDI
669CKI
10K
10K

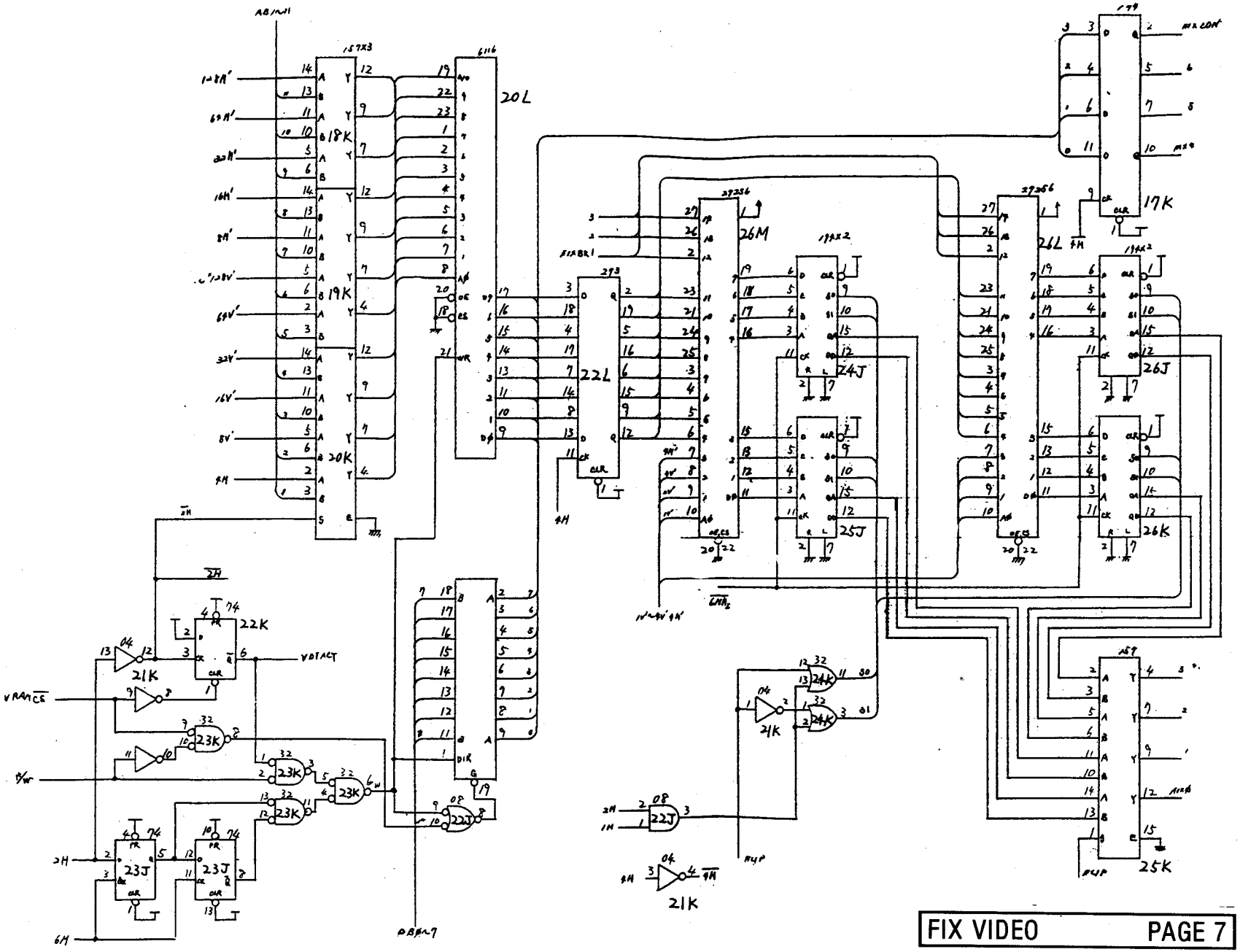

FIX VIDEO PAGE 7

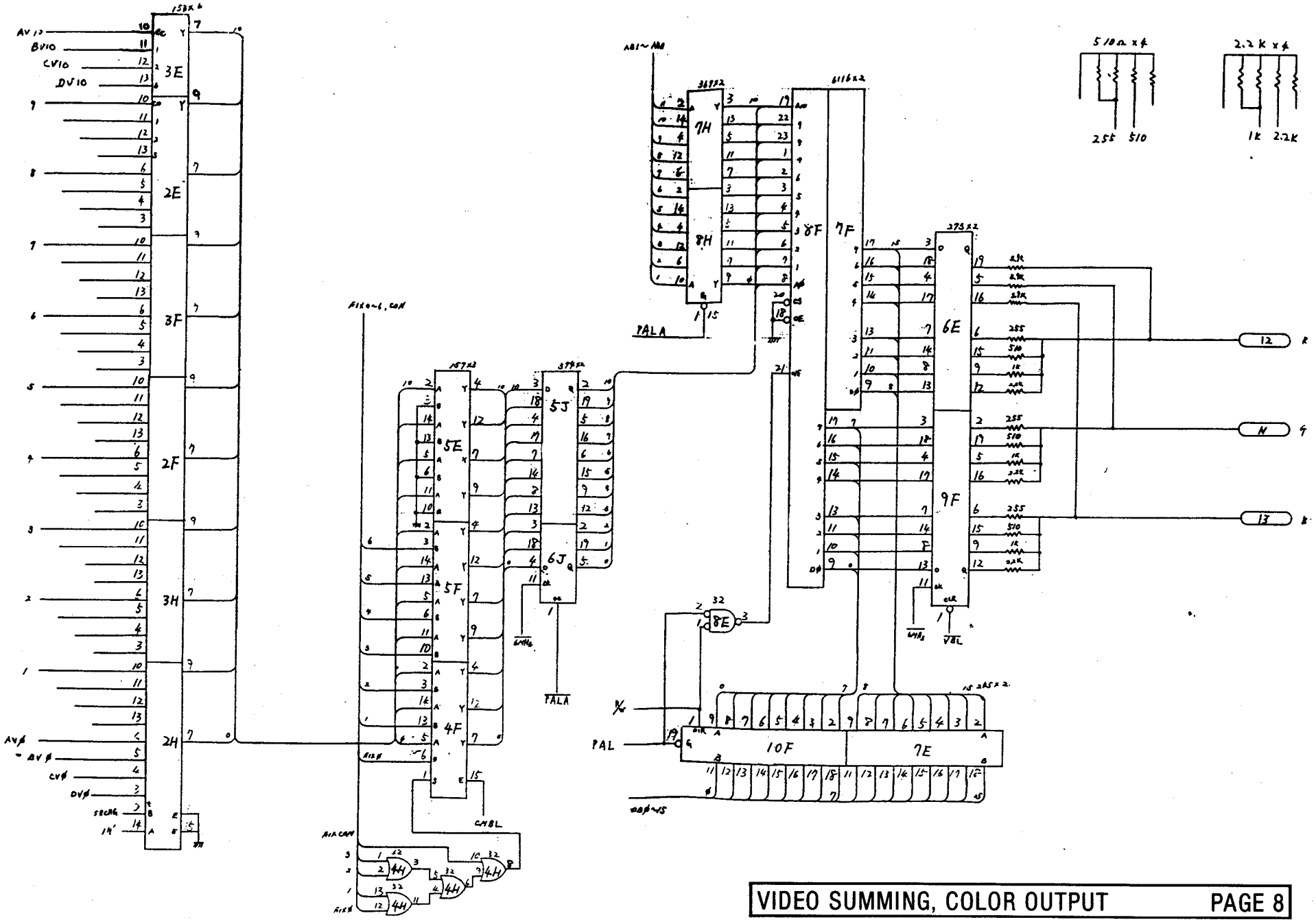

VIDEO SUMMING, COLOR OUTPUT PAGE 8

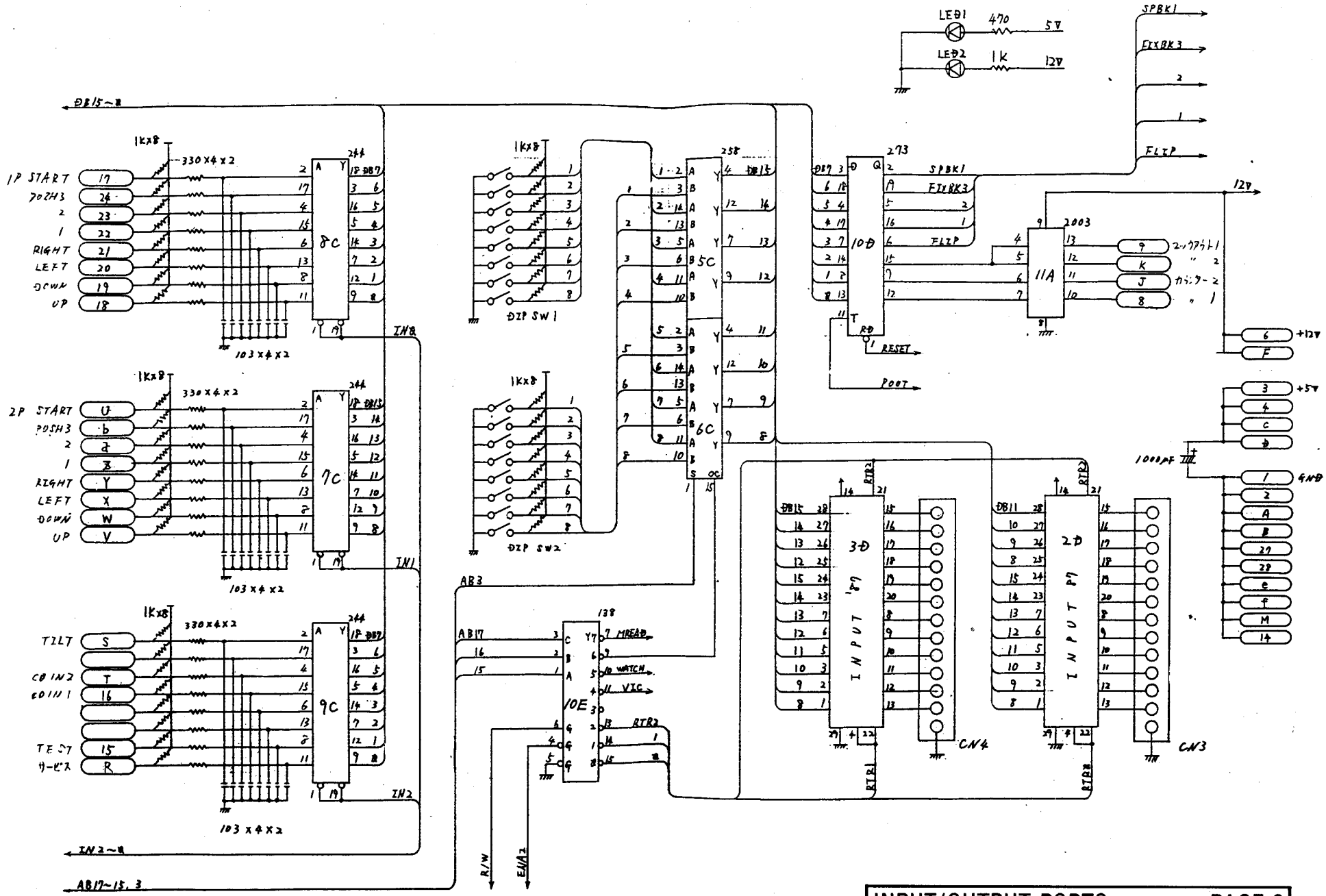

INPUT/OUTPUT PORTS PAGE 9

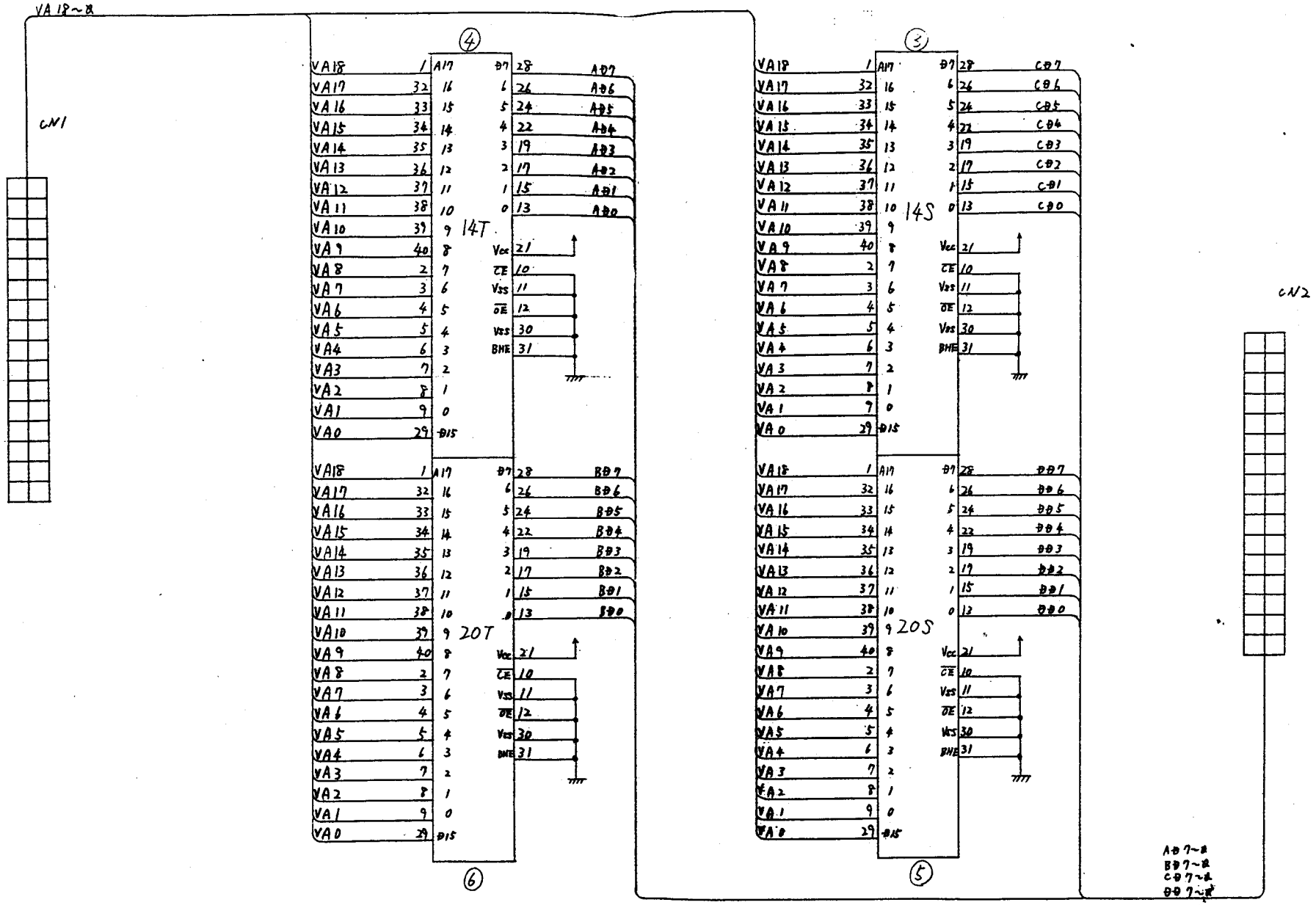
VA 18~0
CN1
14T
20T
14S
20S
CN2
A07~00
B07~00
C07~00
D07~00

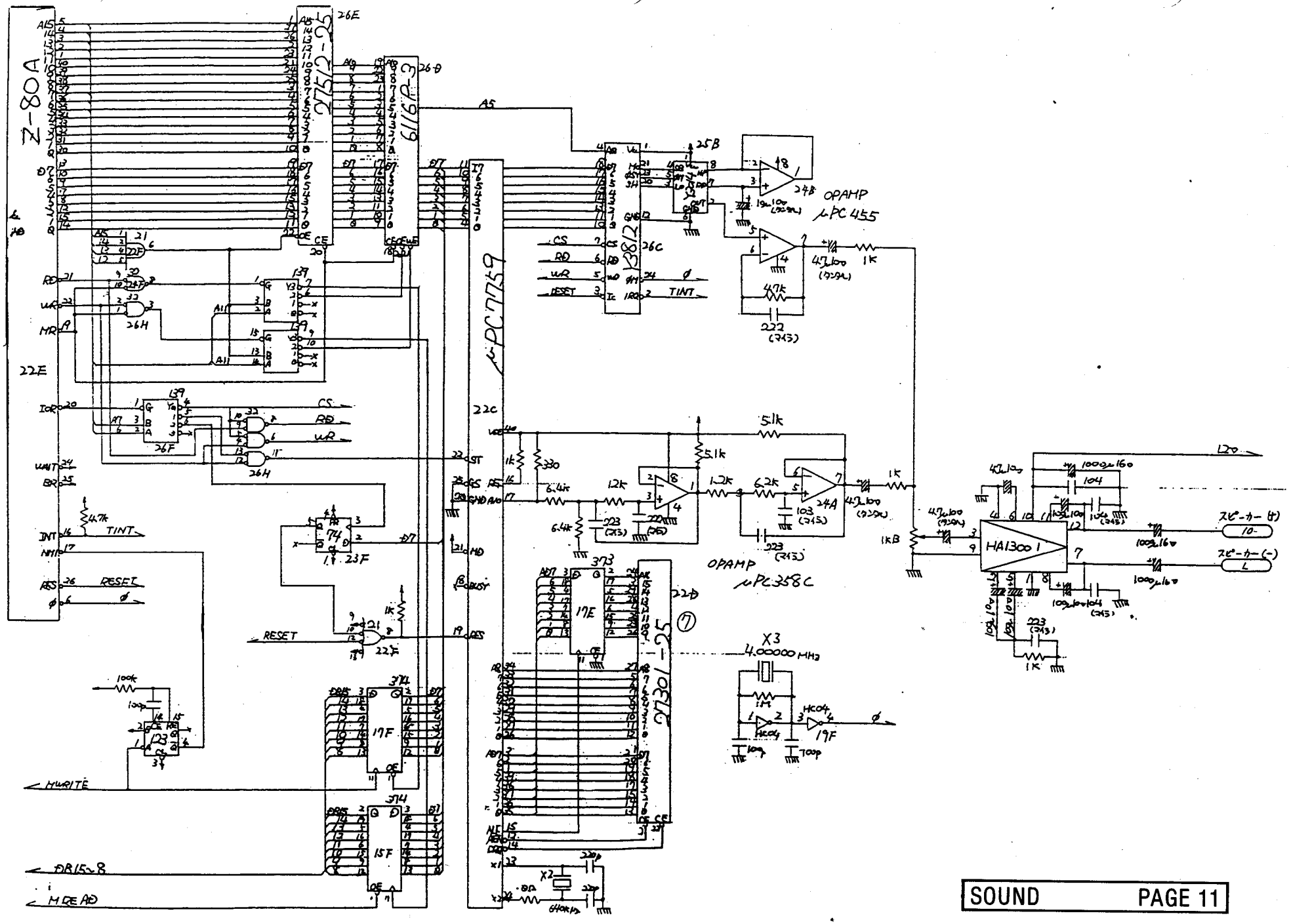
Z-80A
27512-25
6116P-3
μPC7759
V3812
OPAMP
μPC455
OPAMP
μPC358C
HA1300 1
27301-25
X3
4.00000 MHz
X2
640kHz
MWRITE
DB15~8
MREAD
RESET
TINT
CS
RD
WR

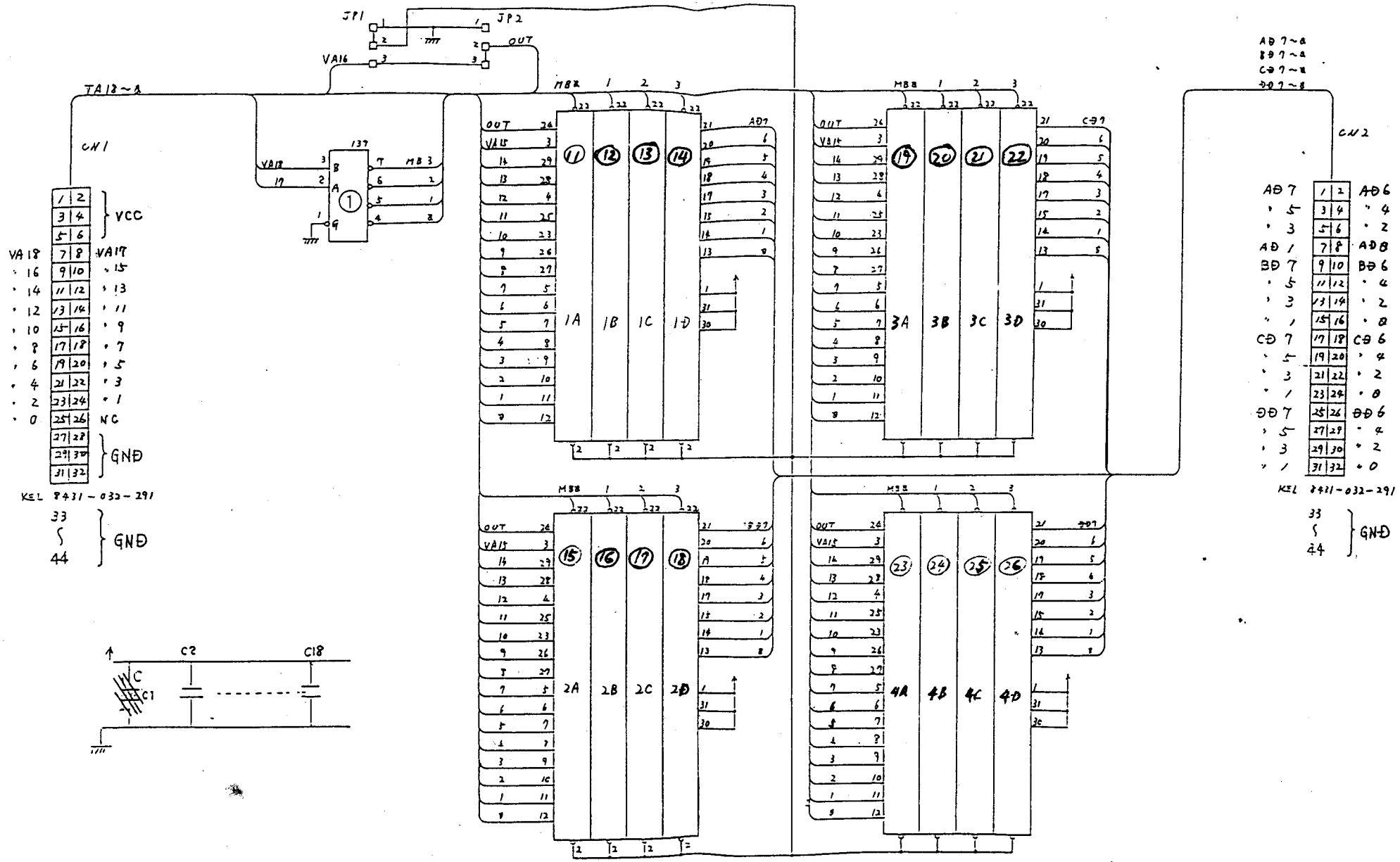

MEMORY SUB PCB PAGE 12

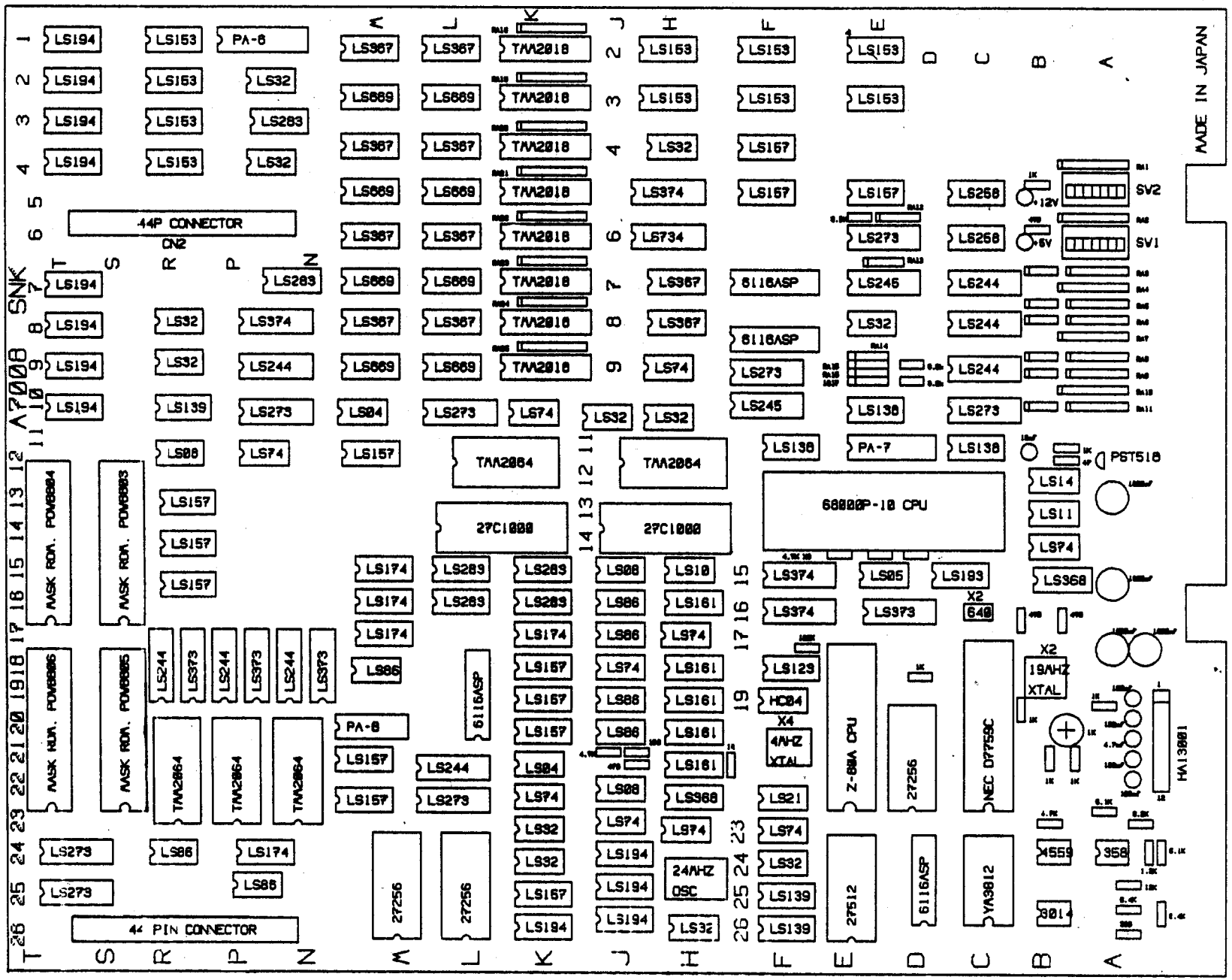
SNK
A7008
MADE IN JAPAN
44P CONNECTOR
CN2
44 PIN CONNECTOR
MASK ROM. POW6884
MASK ROM. POW6883
MASK ROM. POW6886
MASK ROM. POW6885
68000P-10 CPU
Z-80A CPU
NEC D7759C
YA3812
24MHZ OSC
19MHZ XTAL
4MHZ XTAL
SV2
SV1
PST518
HA13001

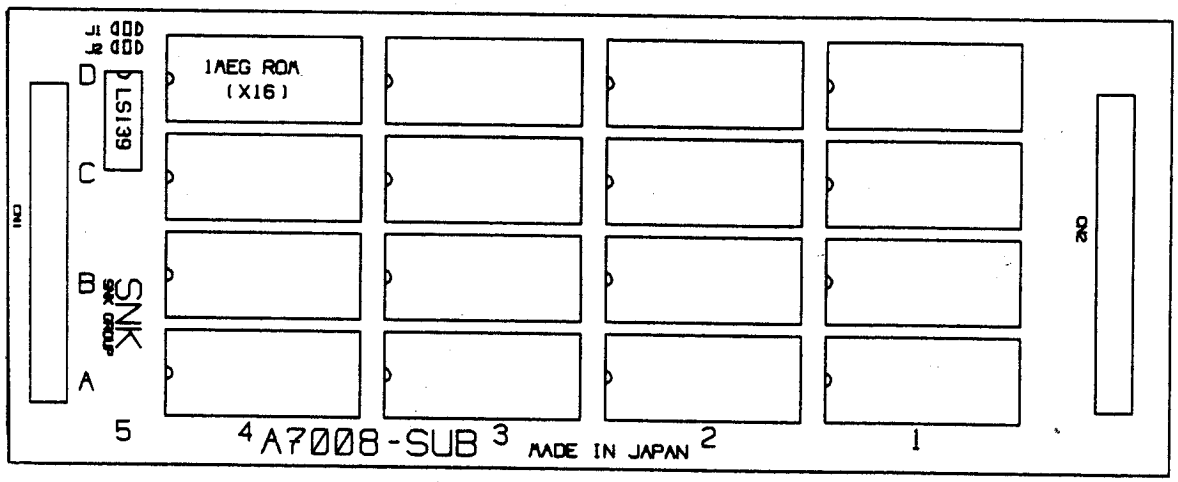

A7008 SUB PCB PAGE 14

CONNECTOR CR7E-56DA-3.96E (HRS) 3.96mm Pitch

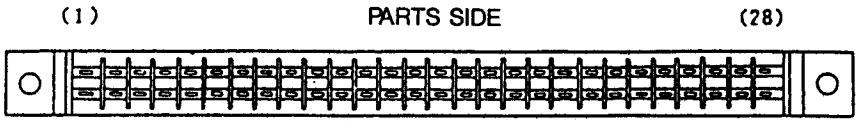

56 PIN

SOLDER SIDE	PIN #		PARTS SIDE
GND	A	1	GND
GND	B	2	GND
+5V	C	3	+5V
+5V	D	4	+5V
-5V	E	5	-5V
+12V	F	6	+12V
KEY	H	7	KEY
COIN-COUNTER 2	J	8	COIN-COUNTER 1
	K	9	
SPEAKER(-)	L	10	SPEAKER(+)
	M	11	
VIDEO GREEN	N	12	VIDEO RED
VDEO SYNC	P	13	VIDEO BLUE
SERVICE SW	R	14	VIDEO GND
	S	15	TEST SW
COIN SW 2	T	16	COIN SW 1
2P START SW	U	17	1P START SW
2P UP	V	18	1P UP
2P DOWN	W	19	1P DOWN
2P LEFT	X	20	1P LEFT
2P RIGHT	Y	21	1P RIGHT
2P PUSH 1	Z	22	1P PUSH 1
2P PUSH 2	a	23	1P PUSH 2
2P PUSH 3	b	24	1P PUSH 3
	c	25	
	d	26	
GND	e	27	GND
GND	f	28	GND

II. GAME INFORMATION

PRISONERS OF WAR™

1. SELF TEST INFORMATION 1
2. DIP-SWITCH OPTIONS 4

PRISONERS OF WAR™

1. SELF—TEST INFORMAITON.

The Memory IC's and Sound Circuit is automatically tested each time the power is applied to the PCB. In the event a failure is detected, the test will stop and attempt to display the error condition. This is an indication only, and should be utilized only as a starting point for trouble-shooting.

The error conditions are as follows:

ROM 1 ERROR: Check Rom at location 13-14H (DG1)

ROM 2 ERROR: Check Rom at location 13-14K (DG2)

LSPRITE ERROR: Check Rams at 22N, 22P, and 22R (TMM2064 or HN6264)

FSPRITE ERROR: Check Ram at 20L (TMM2016 or HN6116)

RAM ERROR: Check Rams at locations 12H and 12K (TMM2064 or HN6264)

To place the game into the Manual Self-Test Mode, set switch 2 of Dip-Switch 2 to the 'ON' position and apply power. The game will test the memory and sound circuit, and then display the first test. Press the 1 Player Start button to advance to the next test.

The sequence ofthe tests are as follows:

1 DIP MODE

DIP 1	1	2	3	4	5	6	7	8	DIP 2	1	2	3	4	5	6	7	8
	0	0	0	0	0	0	0	0		0	0	0	0	0	0	0	1

CONTINUE ON

DISPLAY NORMAL

HERO 2

COIN 1 PLAY 1 1 CONIN 2 PLAY 1 1

LEVEL 2

DEMO SOUND ON

1ST BONUS 40000 SECOND BONUS

2ND BONUS 10000 0 OFF 1 ON

CREDIT

1. DIP MODE CHECK: Set up the Dip-Switch settings as shown in the table.

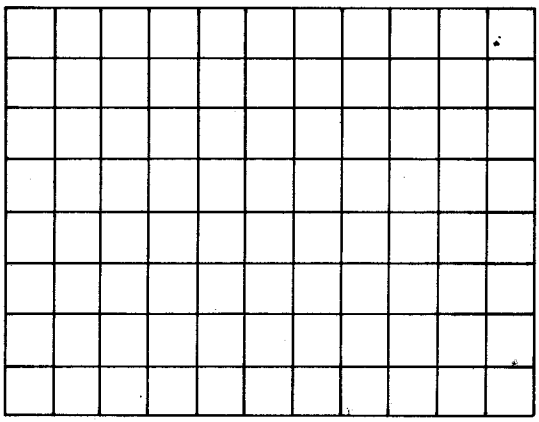

2. CROSS-HATCH: Used for monitor size and linearity adjustments.

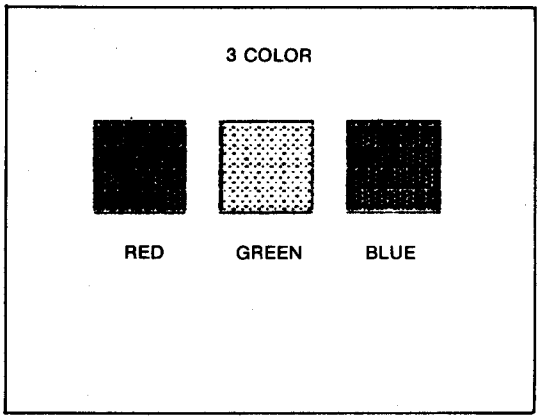

3. COLOR TEST: Assure that the colors are property displayed on the monitor.

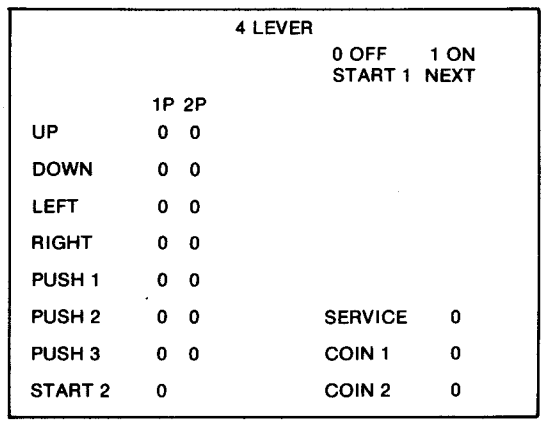

4. LEVER TEST: Used for checking control panel switch operation.

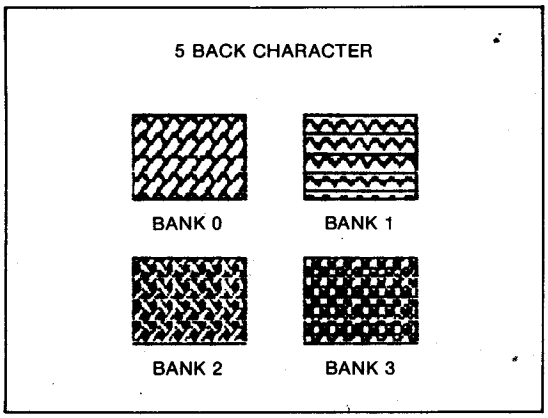

BACK CHARACTER TEST: Dispalys 4 sprite characters, cycles through various color patterns.

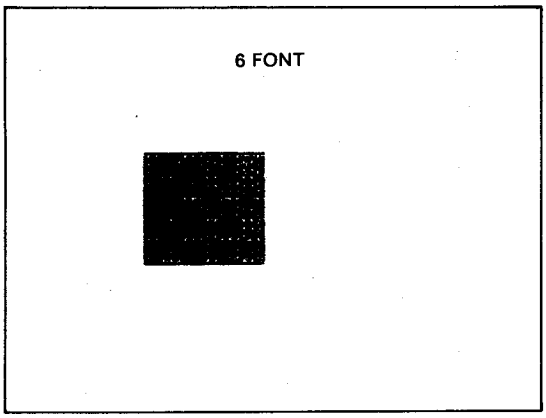

6. FONT TEST: Displays Blue Hero character, change position using the joystick.

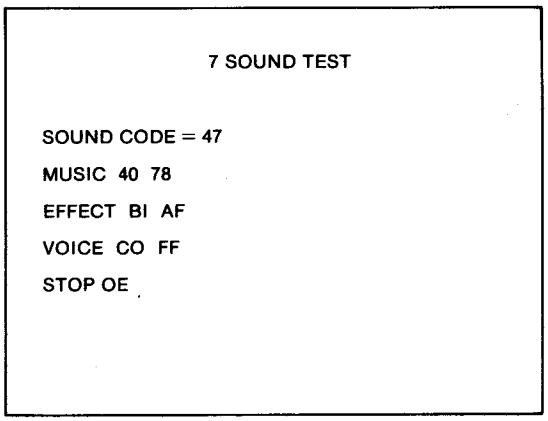

7. SOUND TEST: Set up sound code (?) using the joystick and activate that sound by pressing the Kick button (Push 1).

2. DIP-SWITCH OPTIONS.

The Prisoner of War™ game can be adjusted for optimum suitability for the location in which it is to be operated. To alter the current settings, remove power to the game, locate the two banks of Dip-Switches, and change the positon of the required switches. Please refer to the following table for available options.

SWITCH 1	CONTENTS	1	2	3	4	5	6	7	8
SCREEN ROTATION	NORMAL	OFF							
	REVERSE	ON							
BONUS OCCURENCE	SECOND BONUS			OFF					
	EVERY BONUS		ALWAYS OFF	ON					
NO OF METERS	TWO (2)				OFF				
	THREE (3)				ON				
GAME PRICING COIN 1	1 COIN/1 PLAY					OFF	OFF		
	2 COIN/1 PLAY					ON	OFF		
	3 COIN/1 PLAY					OFF	ON		
	4 COIN/1 PLAY					ON	ON		
GAME PRICING COIN 2	1 COIN/1 PLAY							OFF	OFF
	1 COIN/2 PLAY							ON	OFF
	1 COIN/3 PLAY							OFF	ON
	1 COIN/4 PLAY							ON	ON

SWITCH 2	CONTENTS	1	2	3	4	5	6	7	8
GAME DIFFICULTY LEVELS	(2) STANDARD	OFF	OFF						
	(1) EASY	ON	OFF						
	(3) HARD	OFF	ON						
	(4) VERY HARD	ON	ON						
DEMO MODE SOUND	YES			OFF	OFF				
	NO			ON	OFF				
GAME MODE	NEVER FINISH			OFF	ON				
	STOP DISPLAY			ON	ON				
BONUS 1 ST/2 ND	20000/50000					OFF	OFF		
	40000/100000					ON	OFF		
	60000/150000					OFF	ON		
	NO BONUS					ON	ON		
CONTINUE GAME MODE	YES							OFF	
	NO							ON	
MODE	GAME MODE								OFF
	TEST MODE								ON

III. SERVICE BULLETINS & UPDATES

This section contains all published Field Service Bulletins and Updates. Insert new Field Service information in this section.

SNK FIELD SERVICE BULLETIN

DATE: SEPTEMBER 29, 1988

GAME: PRISONERS OF WAR

SNK Corporation of America would like to inform Field Service personnel of a modification to the Prisoners of War Printed Circuit Board (PCB). The modifications to the PCB consist of adding 2 or 3 resistors onto the PCB to ensure proper operation. This modification corrects the following symptoms:

- Intermittent lock-up during Attract Mode and Game Play Mode
- Game switches to Game Play Mode while in Attract Mode
- Pressing start to continue current game deducts credits, does not start game.
- Punch and Kick sounds go away during game play

If your game experience these symptoms, please check and/or add the following modifications to the Prisoners of War PCB:

Mod 1: Add a 1K ohm 1/4 watt resistor from pin 25 to pin 28 of HM6264 Ram at location 12K. If this resistor is already installed, check the quality of the soldering as this may have a bad solder connection. NOTE: If 12K is mounted in a socket, the resistor may be in a different location, check to see if it is at 18K (74LS157), soldered from pin 6 to pin 16.

Mod 2: Add a 1K ohm 1/4 watt resistor from pin 6 to pin 16 of 74LS157 at location 15R. If this resistor is already installed, check the quality of the soldering as this may have a bad solder connection.

Mod 2a: If the 74LS157 at location 15R was produced by Motorola (as identified by the 'M' logo on the device), add a 1K ohm 1/4 watt resistor from pin 10 to pin 16.

NOTE: Please check the access time rating of the Main Program Eproms; DG1 and DG2. These Eproms must be 250 nsec (or faster) devices. The access time rating can be determined by the suffix listed on the device. Refer to the list below for suitable devices. If your PCB has Roms that are not listed below, or have greater than -25 suffixes, please contact SNK's Customer Service department to get further information or replacement Roms.

MITSUBISHI M5M27C100P (One Time Programmable, no window)
NEC D27C1000A-25 (-10, -15, 17, and -20 OK)
HITACHI HN27C301G-25 (-10, -15, 17, and -20 OK)

If you have any questions regarding Prisoners of War or these modifications, please contact SNK's Customer Service Service department Monday thru Friday, between 8:00 am to 5:00 pm Pacific Time at (408) 736-8844.

SNK FIELD SERVICE BULLETIN

DATE: OCTOBER 26, 1988

GAME: PRISONERS OF WAR

SNK Corporation of America's Technical Service department has received a number of calls regarding Prisoners of War intermittantly not giving a credit when a coin is inserted. The problem does not seem to be caused by the same component in every case and we have not been able to duplicate the problem in-house. Serveral customers have been able to eliminate the problem by performing one of the following:

1. Adjust the coin switch actuator wire, in some cases the problem can be solved by adjusting the wire up slightly.

2. Replace the coin switch, several operators have successfully eliminated the problem simply by replacing the microswitch.

3. Install a capacitor across the coin switch. This will eliminate the problem in every case and not harm the game. We have heard that using any value between 1mf and 10mf electrolytic (at least 10 vdc) will eliminate the problem. This component is polarized, so be certain that the (-) lead is connected to the common (ground) terminal of the microswitch.

If you have any questions regarding Prisoners of War of these modifications, please contact SNK's Customer Service department Monday thru Friday, between 8:00 am to 5:00 pm Pacific Time at (408) 736-8844.

SNK FIELD SERVICE BULLETIN

DATE: OCTOBER 28, 1988

GAME: PRISONERS OF WAR

There are two versions of the Prisoners of War PCB set. The first version stored all of its graphics memory on four 4 Megabit mask roms, located on the Main PCB. The second version utilized an additional memory Sub PCB mounted piggy-back onto the Main PCB containing sixteen 1 Megabit roms. This was a result of the continuing chip shortage which is currently affecting all of the electronics industries. There is no difference in game play or video images between the two versions.

There have been several instances where the Sub PCB has worked loose from its connections during rough shipment of the game. This causes the game graphics to appear on the screen as large blocks of solid colors. Simply re-seating the Sub PCB will correct this problem. To re-seat the Sub PCB, gently push it down onto its connectors until it is firmly connected to the Main PCB.

After the Sub PCB is re-seated, you should not have a problem with the PCB working loose on location, or during normal game rotation.

If you have any questions or problems regarding Prisoners of War, please contact SNK's Customer Service department Monday thru Friday, between 8:00 am to 5:00 pm Pacific Time at (408) 736-8844.