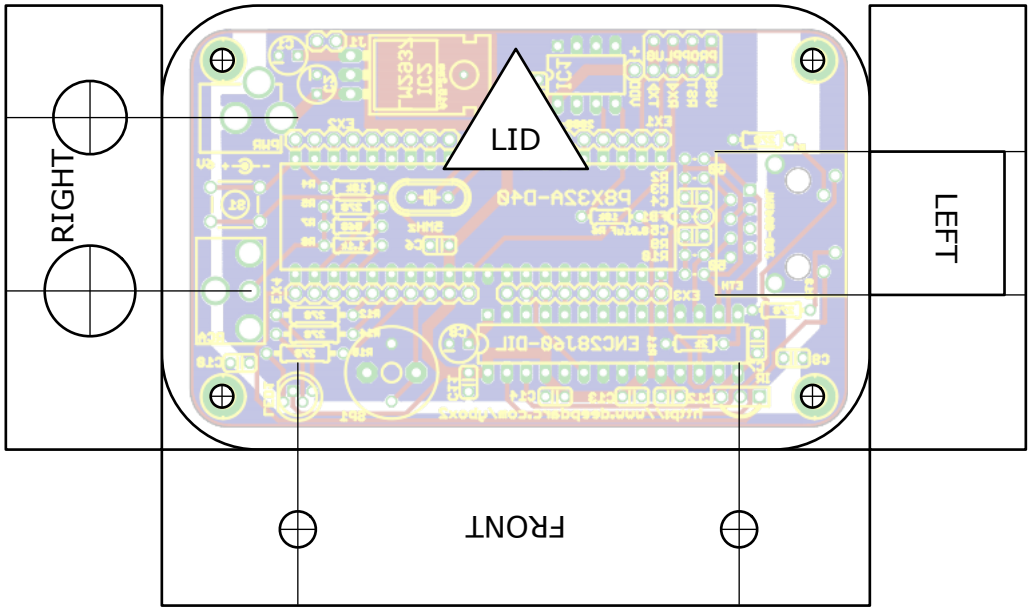

ybox2 tin drill guide v1.3 — For v1.1 (Adafruit) boards only!

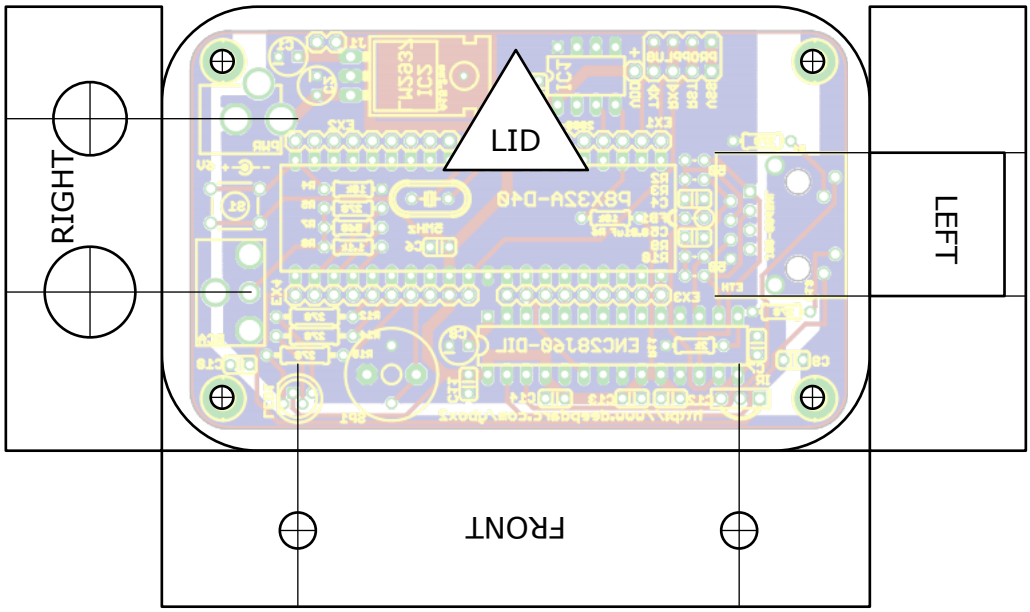
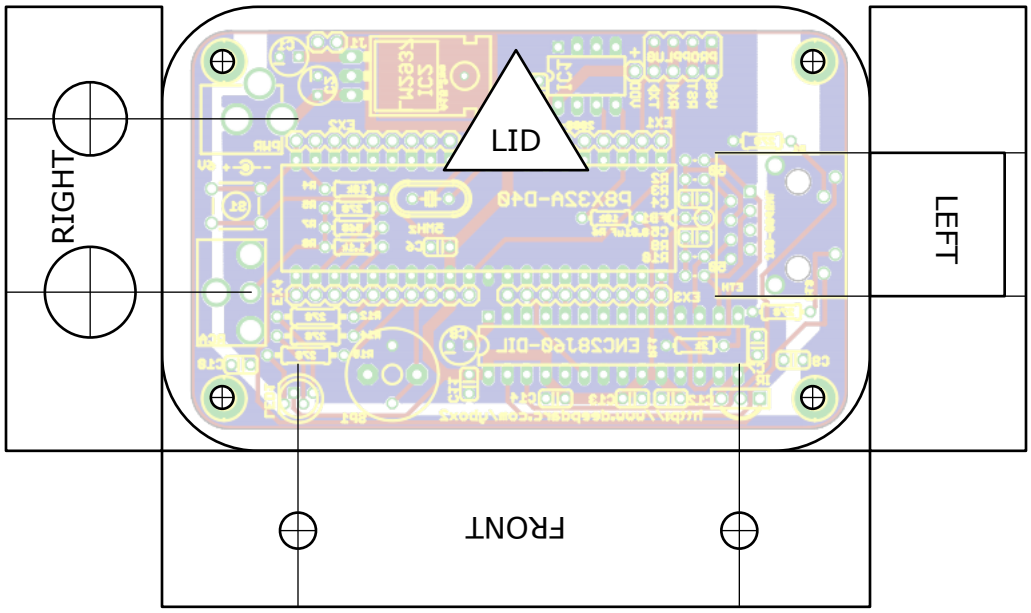
http://www.deepdarc.com/ybox2/ — http://www.ladyada.net/make/ybox2/