CPU

File: cpu.kicad_sch

MEM

File: mem.kicad_sch

UART

File: uart.kicad_sch

Storage_RTC

File: storage.kicad_sch

Power

File: power.kicad_sch

Sheet: /
File: MMU09.kicad_sch

Title:

Size: A4	Date: 2022-08-04	**Rev:**
KiCad E.D.A. kicad 6.0.6		Id: 1/6

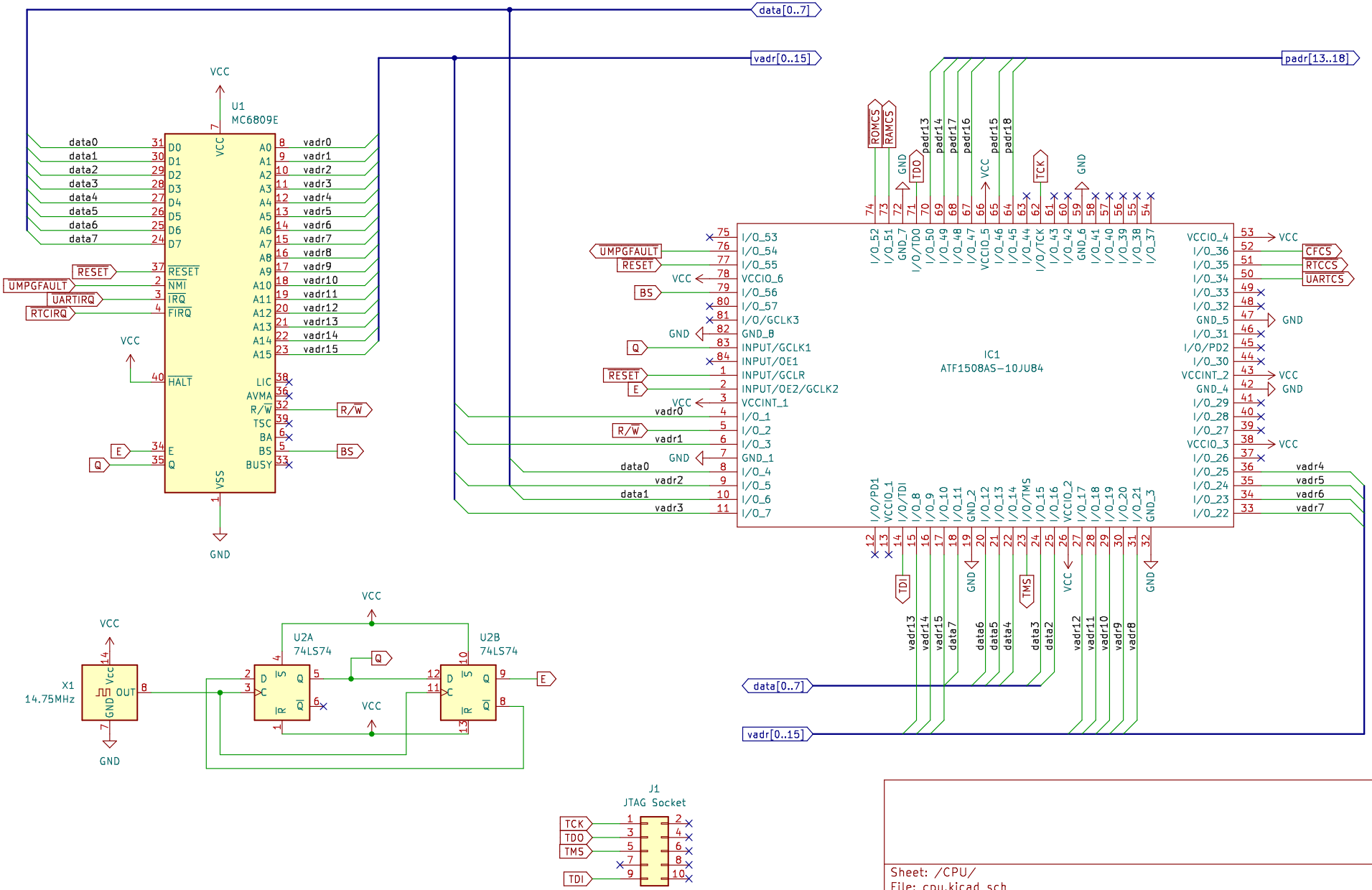

Sheet: /CPU/
File: cpu.kicad_sch

Title:

Size: A4	Date: 2022-08-04	Rev:
KiCad E.D.A. kicad 6.0.6		Id: 2/6

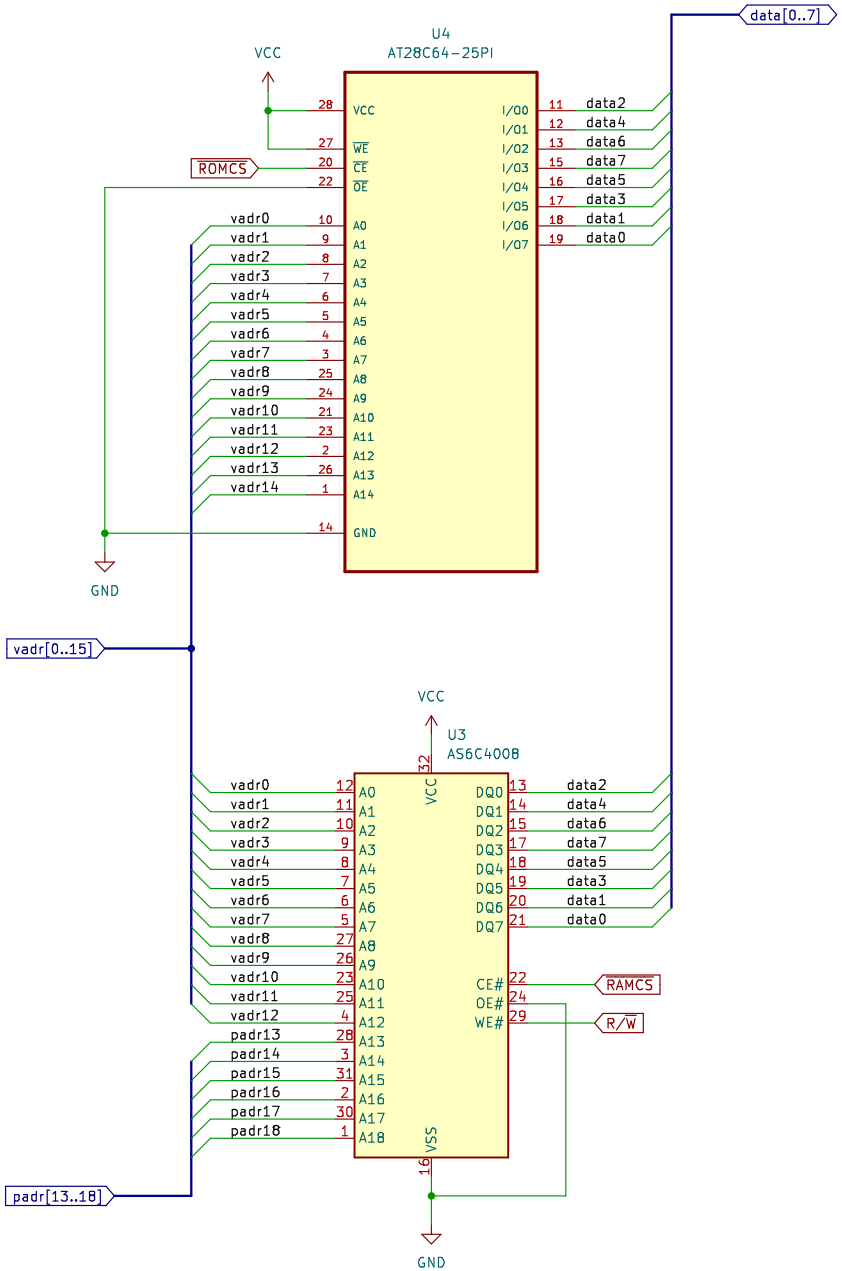

Sheet: /MEM/
File: mem.kicad_sch

Title:

Size: A4	Date: 2022-08-04	Rev:
KiCad E.D.A. kicad 6.0.6		Id: 3/6

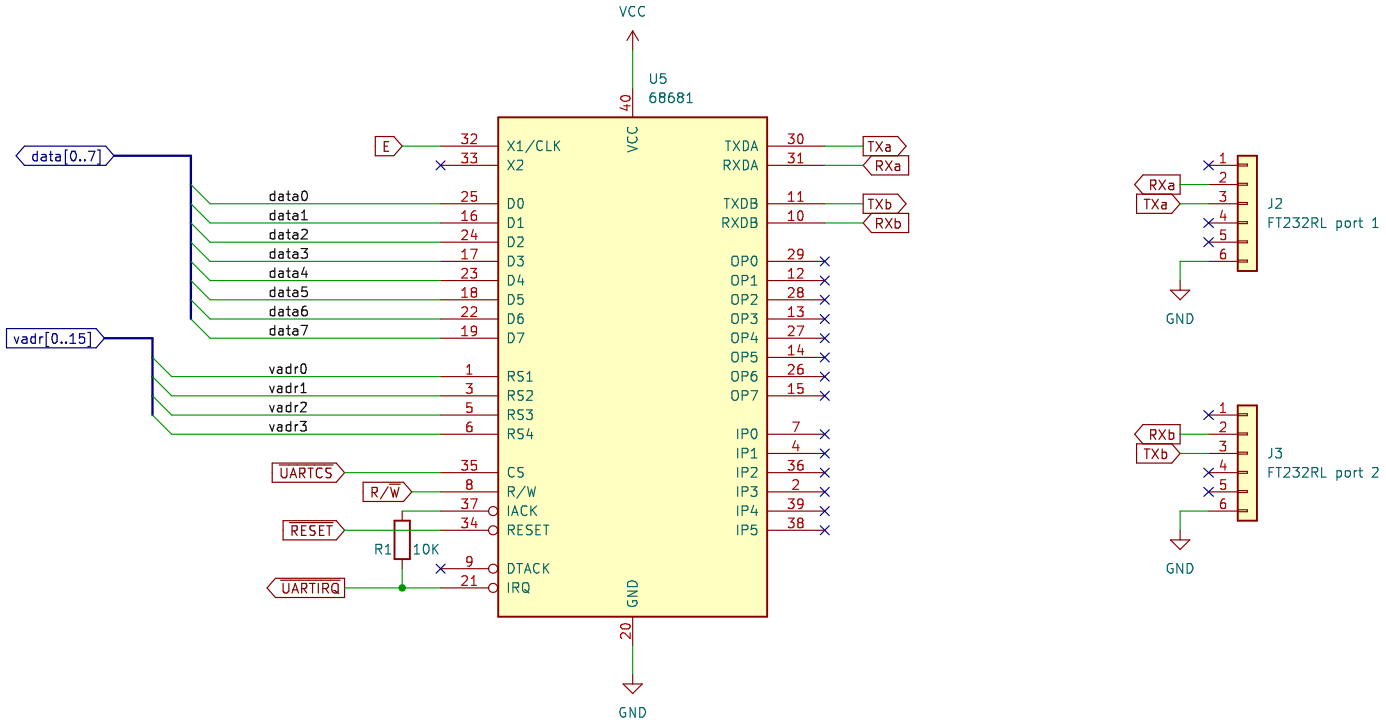

Sheet: /UART/
File: uart.kicad_sch

Title:

Size: A4	Date: 2022-08-04	**Rev:**
KiCad E.D.A. kicad 6.0.6		Id: 4/6

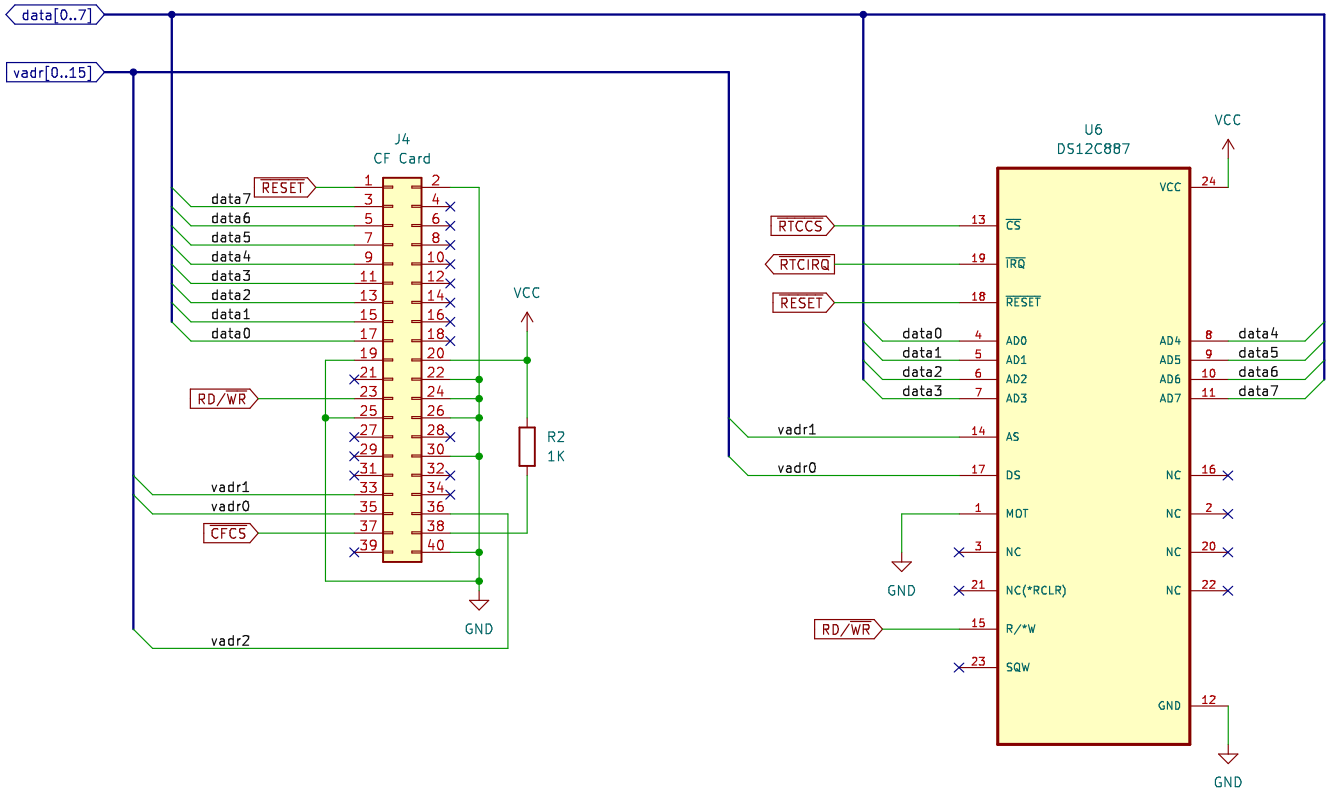

Sheet: /Storage_RTC/
File: storage.kicad_sch

Title:

Size: A4	Date: 2022-08-04	Rev:
KiCad E.D.A. kicad 6.0.6		Id: 5/6

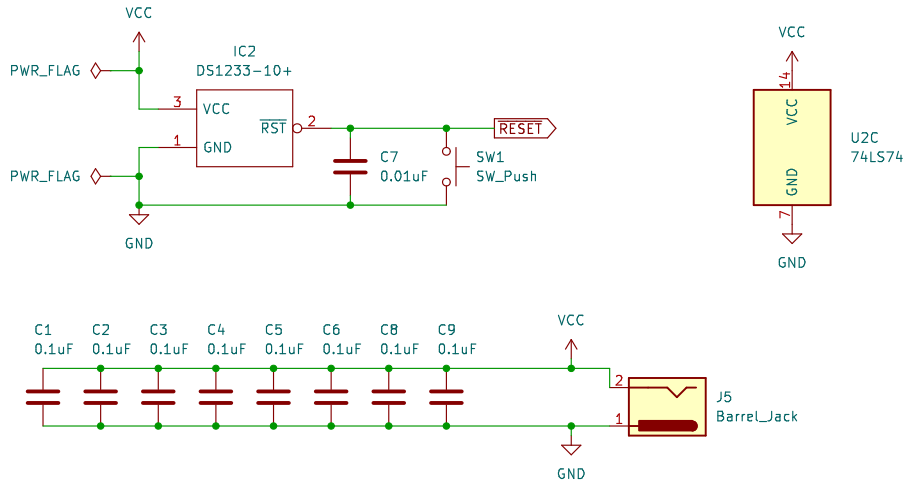

Sheet: /Power/
File: power.kicad_sch

Title:

Size: A4	Date: 2022-08-04	**Rev:**
KiCad E.D.A. kicad 6.0.6		Id: 8/6