CPU

File: cpu.kicad_sch

MEM

File: mem.kicad_sch

UART

File: uart.kicad_sch

Storage_RTC

File: storage.kicad_sch

Power

File: power.kicad_sch

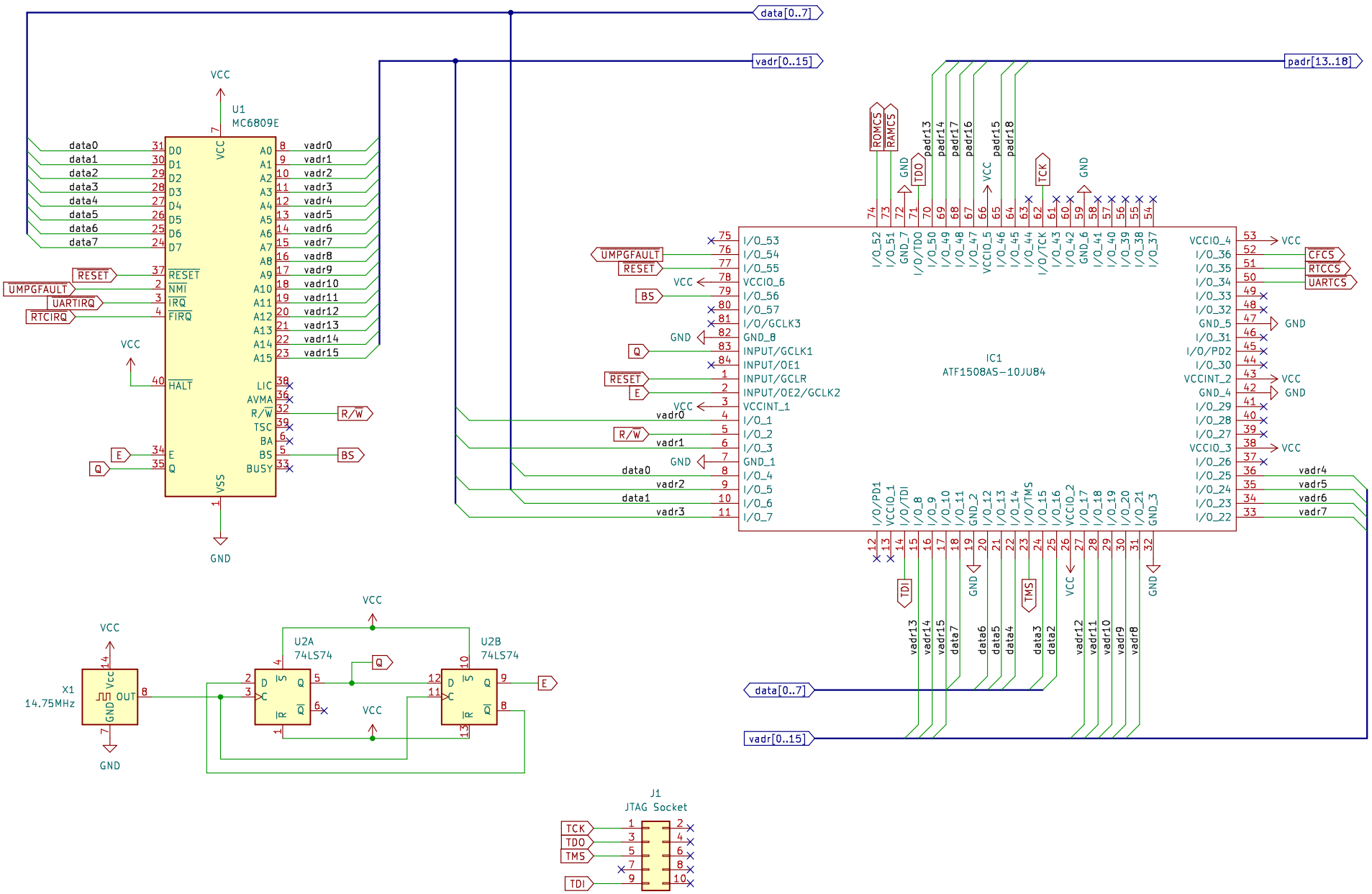
data[0..7]
vadr[0..15]
padr[13..18]
U1
MC6809E
VCC
GND
data0
data1
data2
data3
data4
data5
data6
data7
RESET
UMPGFAULT
UARTIRQ
RTCIRQ
HALT
E
Q
R/W
BS
vadr0
vadr1
vadr2
vadr3
vadr4
vadr5
vadr6
vadr7
vadr8
vadr9
vadr10
vadr11
vadr12
vadr13
vadr14
vadr15
IC1
ATF1508AS-10JU84
ROMCS
RAMCS
TDO
TCK
TDI
TMS
padr13
padr14
padr15
padr16
padr17
padr18
CFCS
RTCCS
UARTCS
X1
14.75MHz
OUT
U2A
74LS74
U2B
74LS74
J1
JTAG Socket

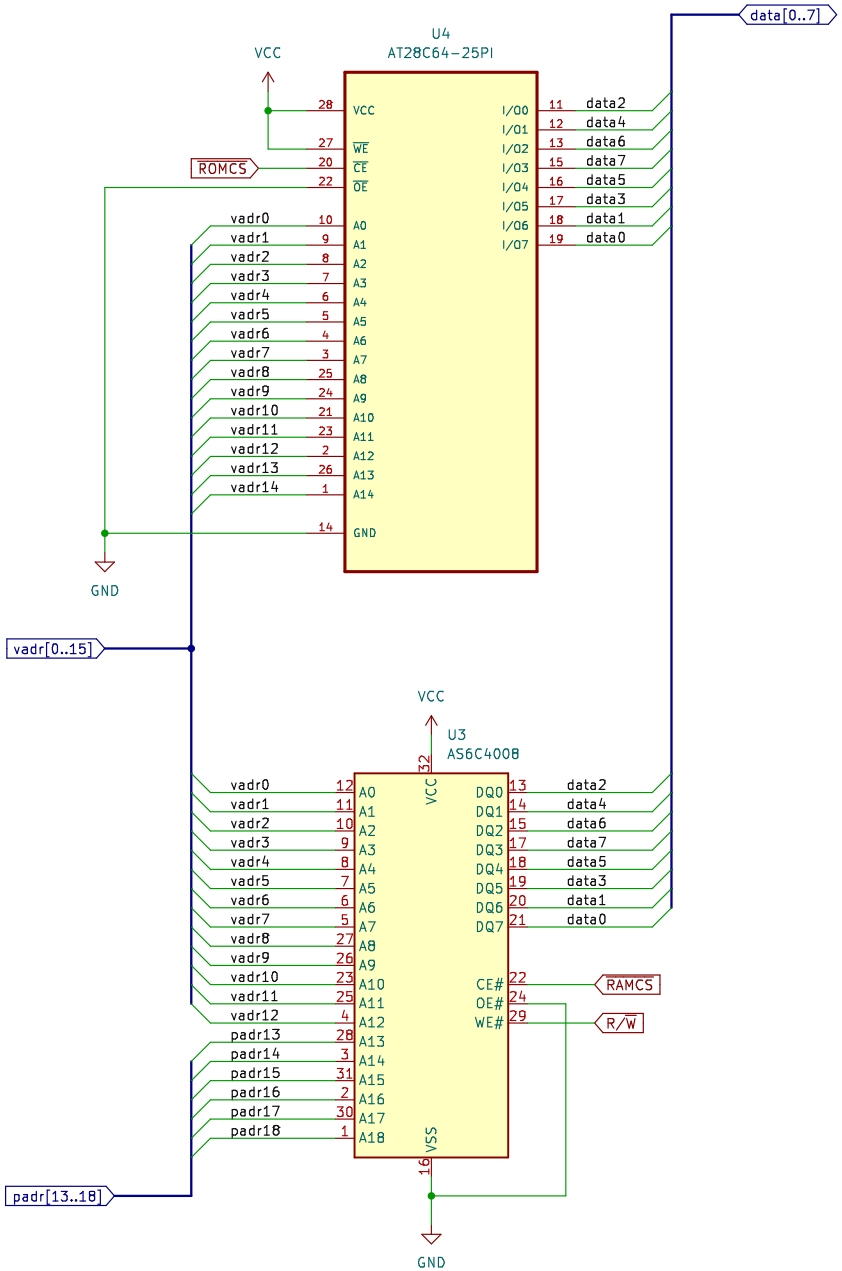
U4
AT28C64-25PI
VCC
ROMCS
GND
vadr[0..15]
data[0..7]
VCC
U3
AS6C400B
RAMCS
R/W
GND
padr[13..18]

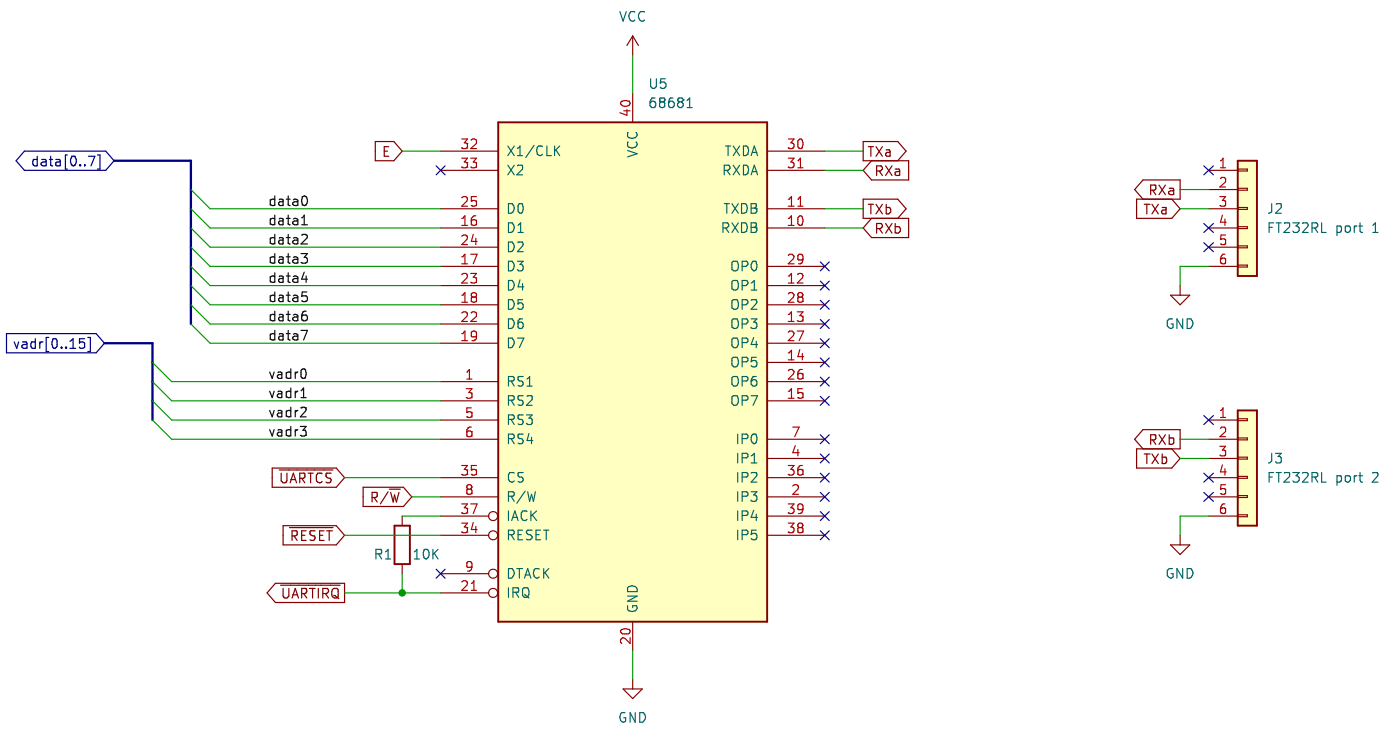
VCC
U5
68681
40
VCC
data[0..7]
E
32
33
X1/CLK
X2
TXDA
RXDA
30
31
TXa
RXa
data0
data1
data2
data3
data4
data5
data6
data7
25
16
24
17
23
18
22
19
D0
D1
D2
D3
D4
D5
D6
D7
TXDB
RXDB
11
10
TXb
RXb
OP0
OP1
OP2
OP3
OP4
OP5
OP6
OP7
29
12
28
13
27
14
26
15
vadr[0..15]
vadr0
vadr1
vadr2
vadr3
1
3
5
6
R51
R52
R53
R54
IP0
IP1
IP2
IP3
IP4
IP5
7
4
36
2
39
38
UARTCS
35
C5
R/W
8
R/W
37
IACK
RESET
34
RESET
R1
10K
9
DTACK
UARTIRQ
21
IRQ
GND
20
GND
RXa
TXa
J2
FT232RL port 1
GND
RXb
TXb
J3
FT232RL port 2
GND

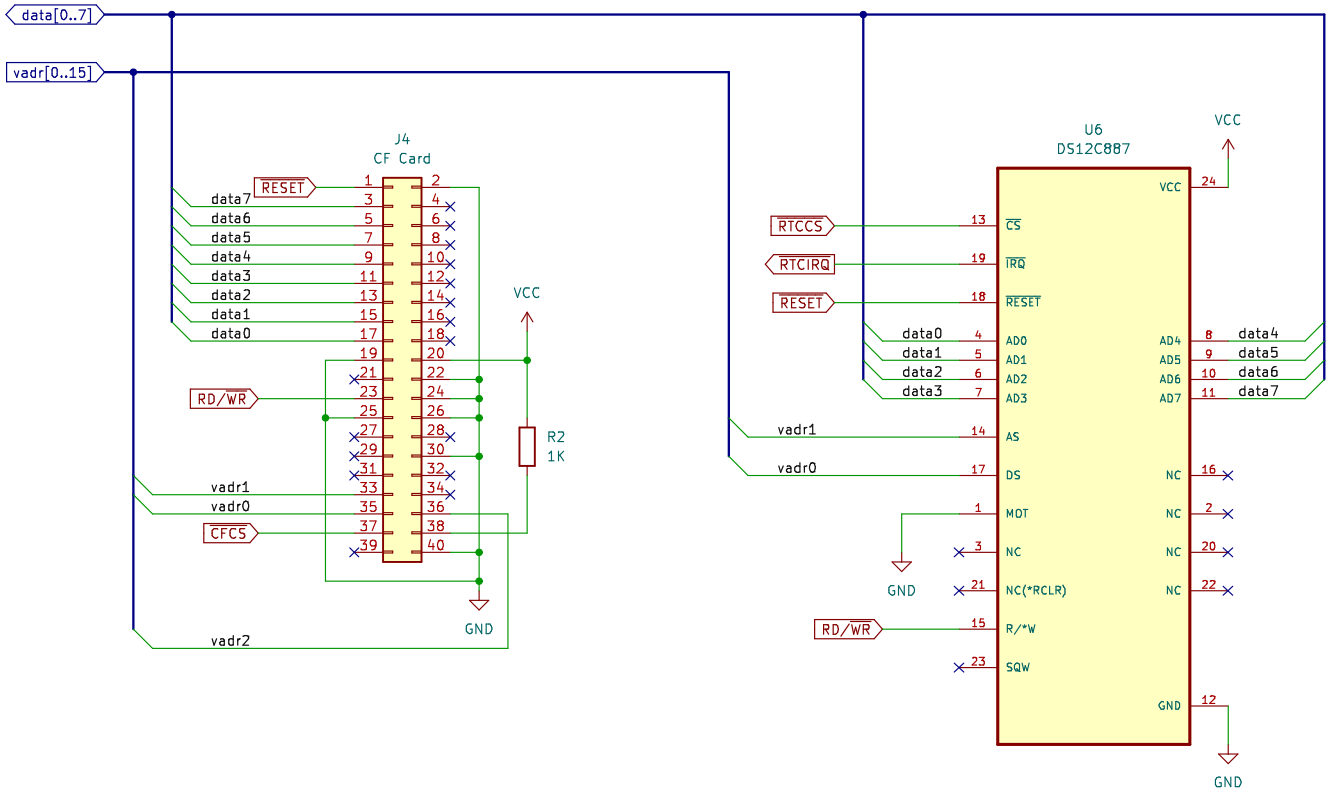
data[0..7]
vadr[0..15]
J4
CF Card
RESET
data7
data6
data5
data4
data3
data2
data1
data0
RD/WR
vadr1
vadr0
CFCS
vadr2
VCC
R2
1K
GND
U6
DS12C887
RTCCS
RTCIRQ
RESET
CS
IRQ
RESET
AD0
AD1
AD2
AD3
AS
DS
MOT
NC
NC(*RCLR)
R/*W
SQW
VCC
AD4
AD5
AD6
AD7
NC
NC
NC
NC
GND
RD/WR
vadr1
vadr0
GND
VCC
data4
data5
data6
data7
GND

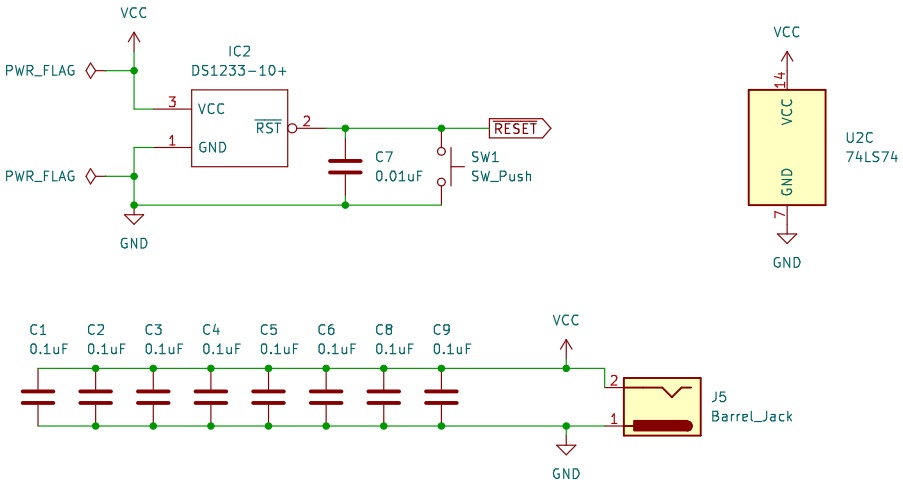
VCC
PWR_FLAG
IC2
DS1233-10+
3
VCC
RST
2
1
GND
PWR_FLAG
GND
C7
0.01uF
SW1
SW_Push
RESET
VCC
14
VCC
U2C
74LS74
GND
7
GND
C1
0.1uF
C2
0.1uF
C3
0.1uF
C4
0.1uF
C5
0.1uF
C6
0.1uF
C8
0.1uF
C9
0.1uF
VCC
2
1
J5
Barrel_Jack
GND