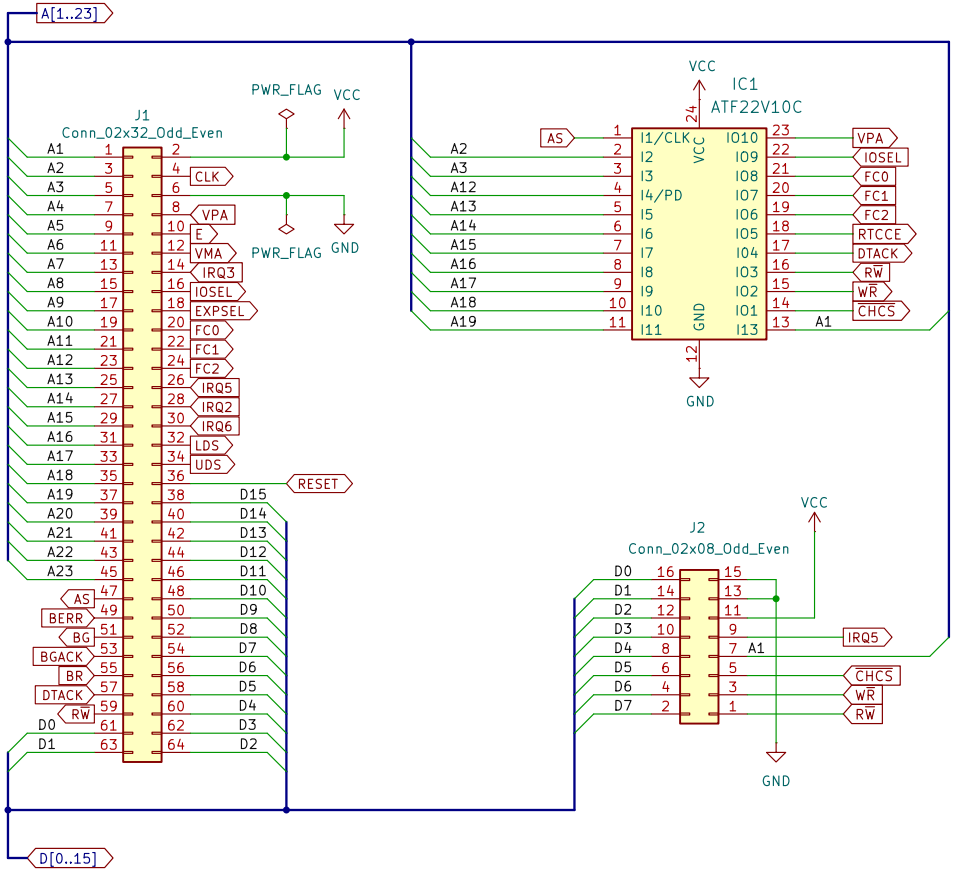

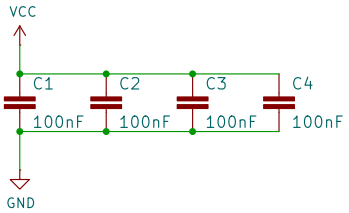

Expansion RAM

File: expansion_ram_sch.kicad_sch

Sheet: /
File: ch375_board.kicad_sch

Title: CH375 and RAM Expansion Board

Size: A4	Date: 2024-10-03	Rev:
KiCad E.D.A. 8.0.0		Id: 1/2

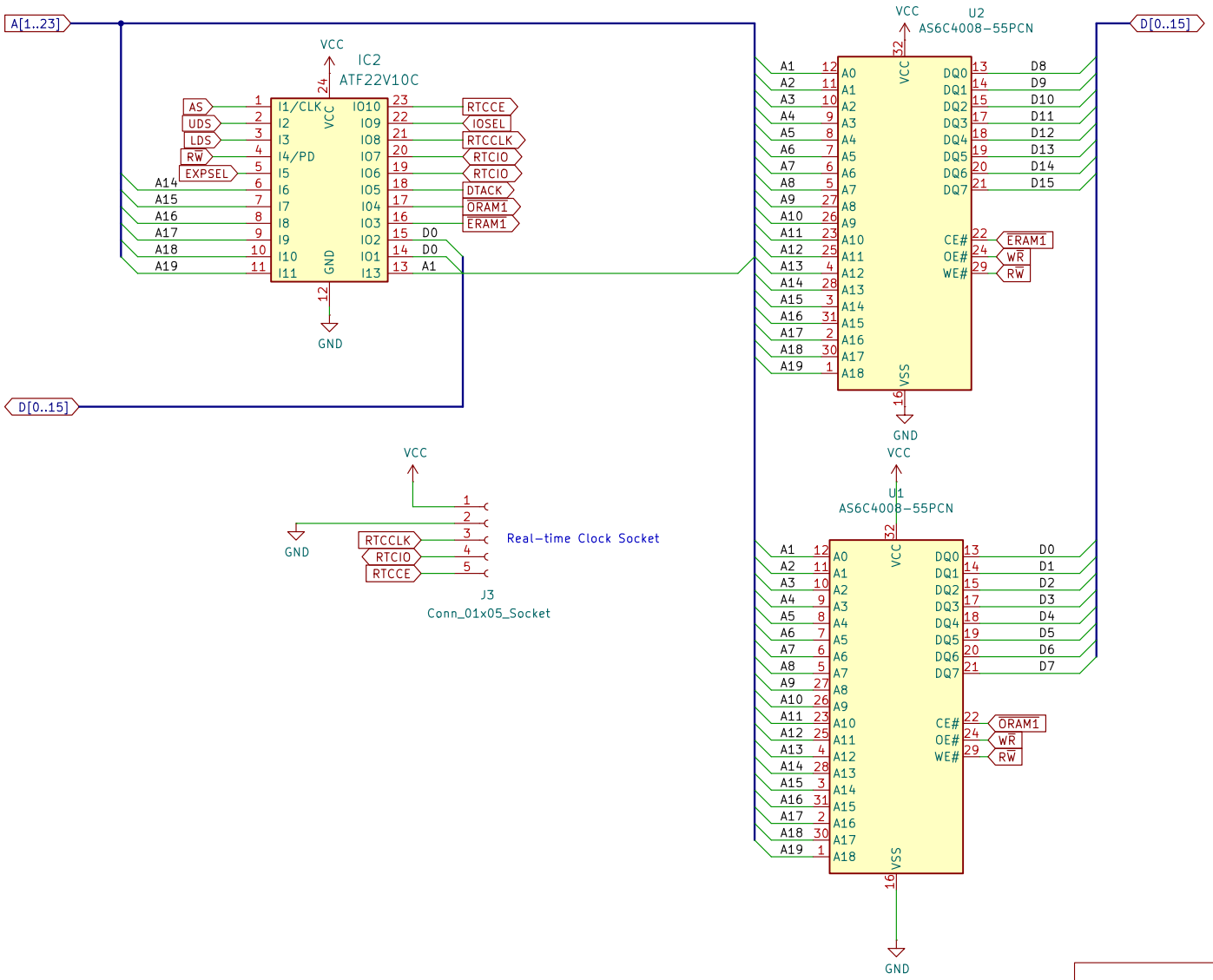

Sheet: /Expansion RAM/
File: expansion_ram_sch.kicad_sch

Title: CH375 and RAM Expansion Board

Size: A4	Date: 2024-10-03	Rev:
KiCad E.D.A. 8.0.0		Id: 1/2