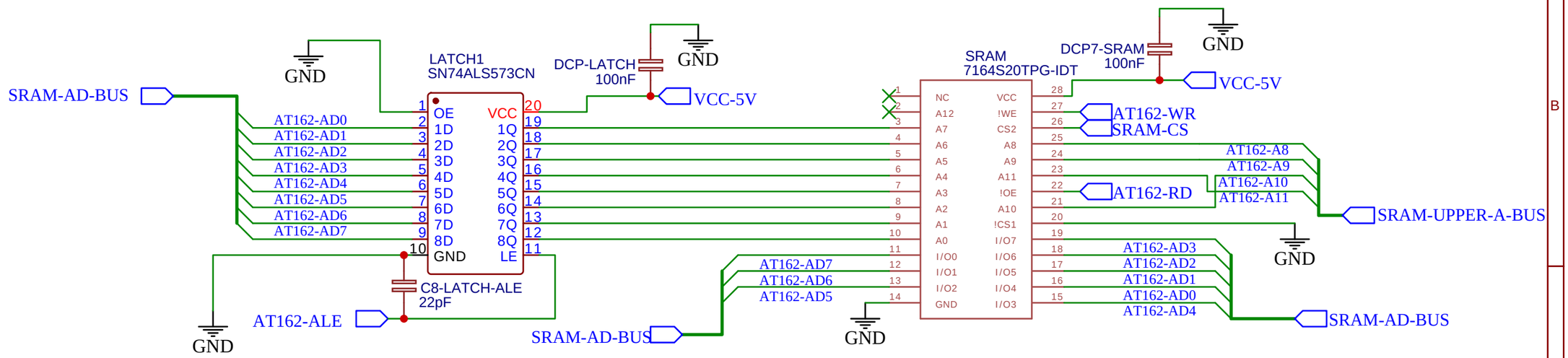

TITLE: Latch&SRAM		REV: 1.0
EasyEDA	Company: Your Company	Sheet: 1/1
	Date: 2019-09-26 Drawn By: olavpe	