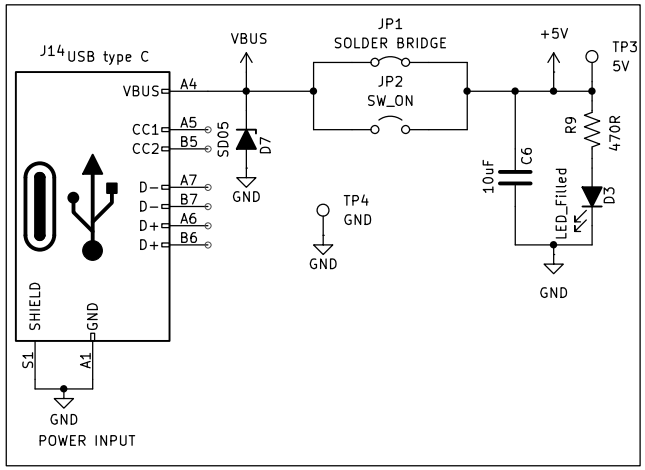
J14 USB type C
VBUS
A4
CC1
A5
CC2
B5
D-
A7
D-
B7
D+
A6
D+
B6
SHIELD
GND
S1
A1
GND
POWER INPUT
VBUS
SD05
D7
GND
JP1
SOLDER BRIDGE
JP2
SW_ON
TP4
GND
GND
+5V
TP3
5V
10uF
C6
R9
470R
LED_Filled
D3
GND

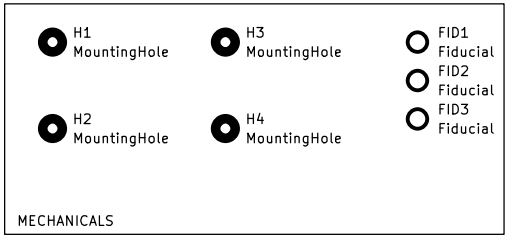
H1
MountingHole
H2
MountingHole
H3
MountingHole
H4
MountingHole
FID1
Fiducial
FID2
Fiducial
FID3
Fiducial
MECHANICALS

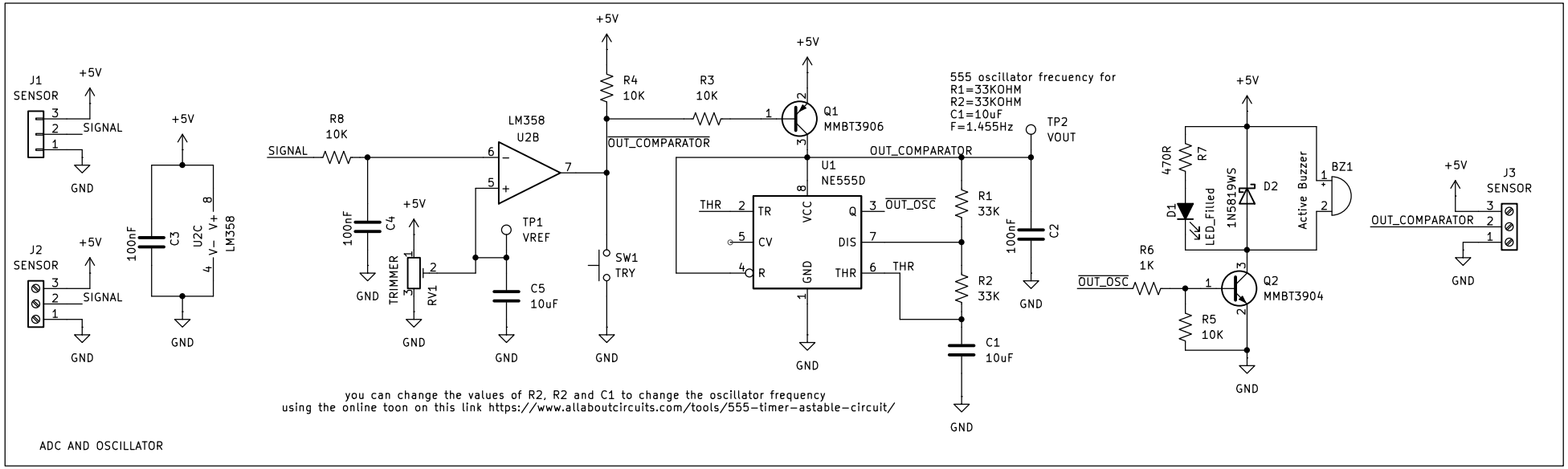
J1
SENSOR
+5V
SIGNAL
GND
J2
SENSOR
+5V
SIGNAL
GND
+5V
100nF
C3
U2C
V+
V-
LM358
GND
R8
10K
SIGNAL
100nF
C4
GND
+5V
TRIMMER
RV1
GND
LM358
U2B
TP1
VREF
C5
10uF
GND
+5V
R4
10K
OUT_COMPARATOR
SW1
TRY
GND
R3
10K
+5V
Q1
MMBT3906
U1
NE555D
THR
TR
CV
R
VCC
Q
DIS
THR
GND
OUT_OSC
GND
555 oscillator frecuency for
R1=33KOHM
R2=33KOHM
C1=10uF
F=1.455Hz
OUT_COMPARATOR
TP2
VOUT
R1
33K
R2
33K
C1
10uF
100nF
C2
GND
THR
GND
+5V
470R
R7
D1
LED_Filled
1N5819WS
D2
Active Buzzer
BZ1
R6
1K
OUT_OSC
Q2
MMBT3904
R5
10K
GND
+5V
J3
SENSOR
OUT_COMPARATOR
GND
you can change the values of R2, R2 and C1 to change the oscillator frequency
using the online toon on this link https://www.allaboutcircuits.com/tools/555-timer-astable-circuit/
ADC AND OSCILLATOR