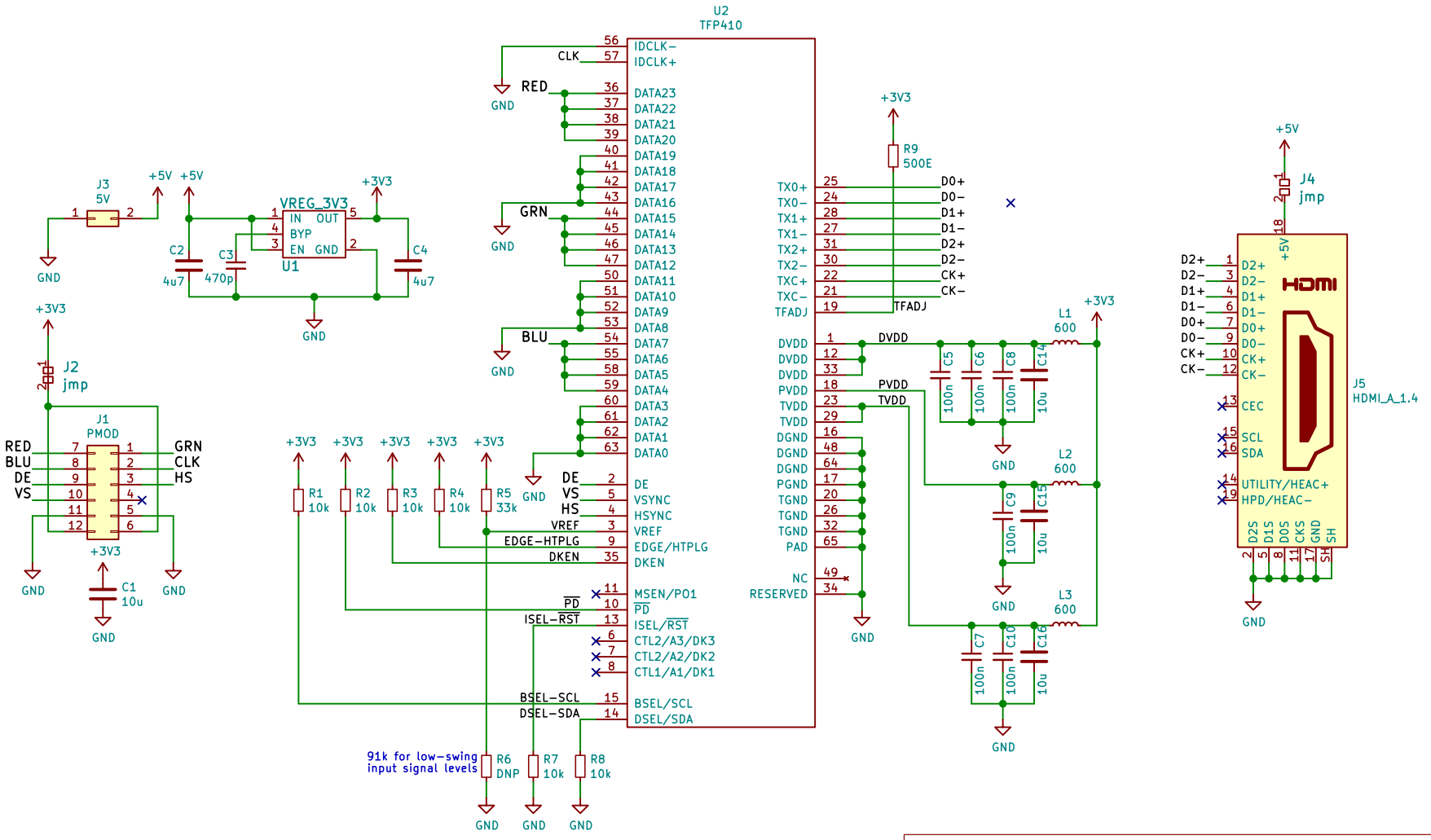

License: CC−BY−SA V4.0
(C) 2018 1BitSquared <info@1bitsquared.com>
(C) 2018 Piotr Esden−Tempski <piotr@esden.net>

1BitSquared

Sheet: /
File: dvi−3bit.sch

Title: iCEBreaker PMOD − 3bit DVI

Size: A4	Date:	Rev: V0.1a
KiCad E.D.A. kicad 5.0.2−bee76a070ubuntu18.04.1		Id: 1/1