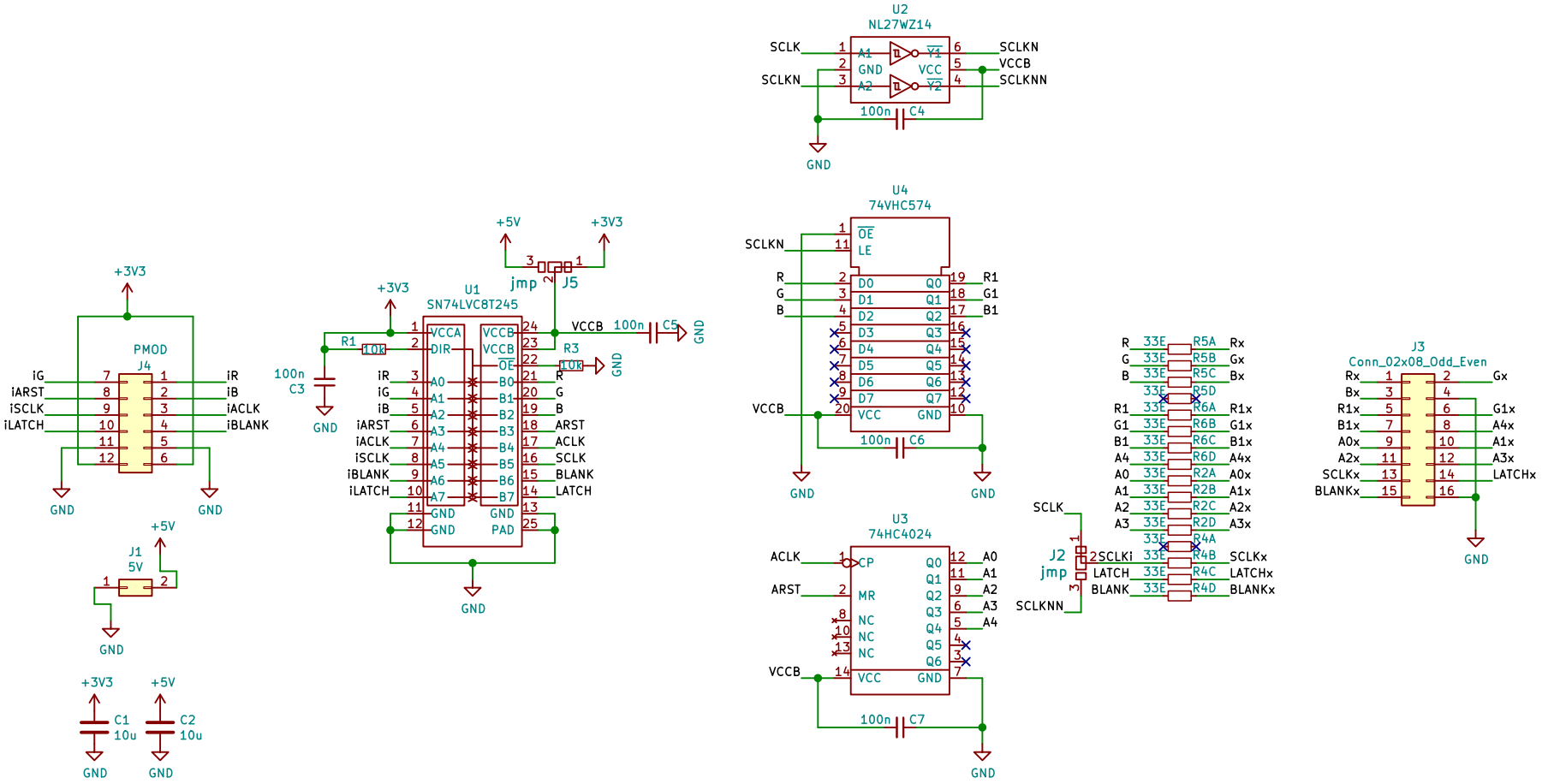

License: CC-BY-SA 4.0
2018-2019 (C) Piotr Esden-Tempski <piotr@esden.net>
2018-2019 (C) 1BitSquared <info@1bitsquared.com>

1BitSquared

Sheet: /
File: led-panel-single.sch

Title: iCEBreaker PMOD - LED Panel Single HUB75E

Size: A4	Date:	**Rev: V1.0a**
KiCad E.D.A. kicad 5.0.2-bee76a070ubuntu18.04.1		Id: 1/1