SAMSUNG CONFIDENTIAL
THIS DOCUMENT CONTAINS CONFIDENTIAL PROPRIETARY INFORMATION THAT IS SAMSUNG ELECTRONICS CO'S PROPERTY. DO NOT DISCLOSE TO OR DUPLICATE FOR OTHERS EXCEPT AS AUTHORIZED BY SAMSUNG.

ROSELA LABS

SM-N910F_APQ_REV0.9

(T_FLAT, ePOP)

2014.08.31

sheet01 : GSM / WCDMA / LTE RF
sheet02 : DRX, TRANCEIVER, PA DC/DC
sheet03 : MDM9235, PMD9635
sheet04 : SENSORS, HUB, GPS, BT/WIFI, NFC
sheet05 : APQ8084
sheet06 : APQ8084 PWR
sheet07 : PMA8084, CHARGER, IF PMIC, SD Socket
sheet08 : AUDIO Codec, 2-MIC, E/J CON
sheet09 : DISPLAY, CAM, SUB PCB CON, FPS
sheet10 : WACOM, MHL, FPGA

Samsung Confidential

Engineer: RAD TEAM - KOREA
Drawn by: RAD TEAM - KOREA
RAD CHK:
DOC CTRL CHK:
MFG ENGR CHK:
QA CHK:

SAMSUNG ELECTRONICS

TITLE: SM-N910F
Size: A1
16 1 12 A
REV:
Drawing Number:
Page: 5

Changed by: sserdo
Date Changed: Thursday, May 29, 2014
Time Changed: 7:20:37 am

user02|ecad2|10.244.89.250|20140831-125257

SAMSUNG CONFIDENTIAL
THIS DOCUMENT CONTAINS CONFIDENTIAL
PROPRIETARY INFORMATION THAT IS
SAMSUNG ELECTRONICS CO'S PROPERTY.
DO NOT DISCLOSE TO OR DUPLICATE FOR OTHERS
EXCEPT AS AUTHORIZED BY SAMSUNG.

#1 MAIN RFFE

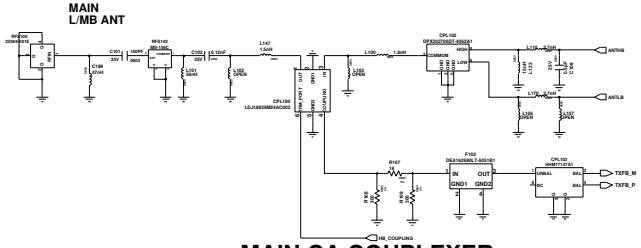

MAIN CA COUPLEXER

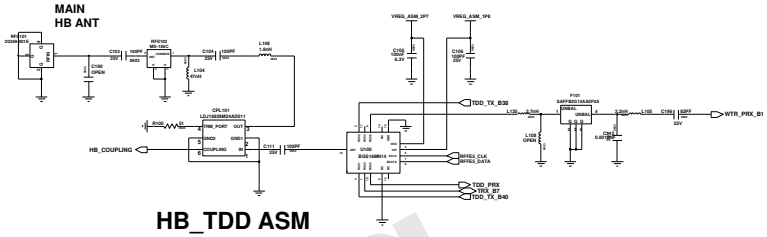

HB_TDD ASM

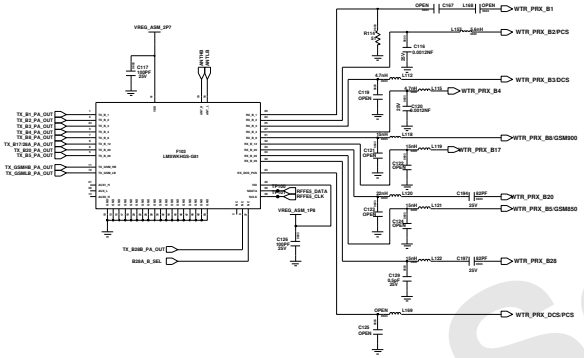

MAIN CA FEMID(BAND1/2/3/4/5/7/17/29, GSM QUAD)

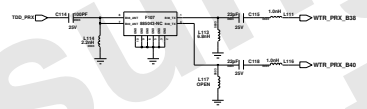

HB_PRX_BPF

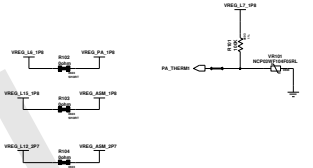

THERMISTOR

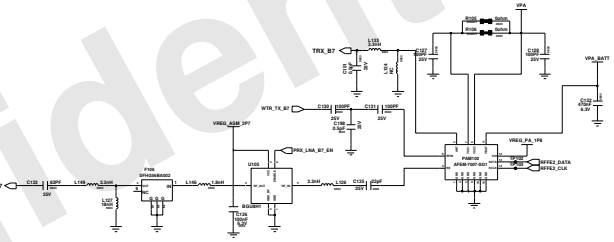

BAND7 PAD (PA + DPX)

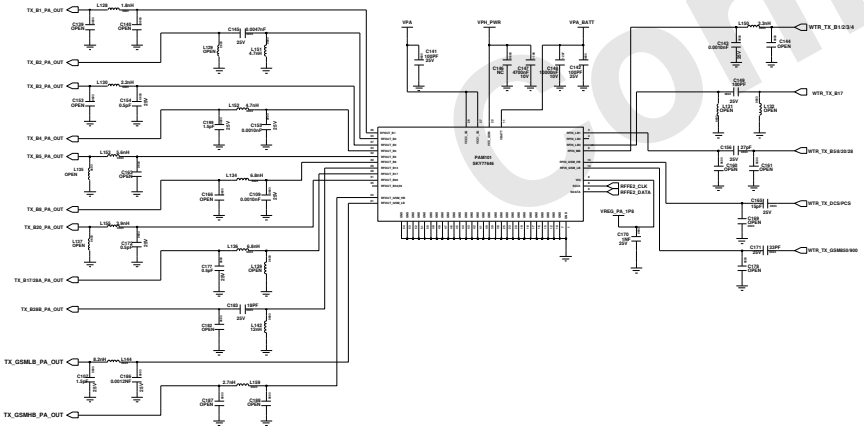

BAND1/2/3/4/5/17, GSM QUAD MMMB PA

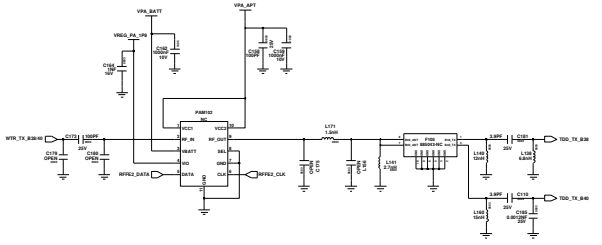

BAND38/40 PAM & BPF

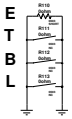

Engineer	RF
Drawn by:	
R&D CHK:	TITLE: SM-N910F
DOC CTRL CHK:	
MFG ENGR CHK:	
QA CHK:	Drawing Number 3/9

Changed by: | Date Changed: | Time Changed:

Samsung Confidential

user02|ecad2|10.244.89.250|20140831-125259

SAMSUNG CONFIDENTIAL
THIS DOCUMENT CONTAINS CONFIDENTIAL INFORMATION AND TRADE SECRETS OF SAMSUNG ELECTRONICS CO'S PROPERTY. DO NOT DISCLOSE TO OR DUPLICATE FOR OTHERS EXCEPT AS AUTHORISED BY SAMSUNG.

#2 SUB RFFE

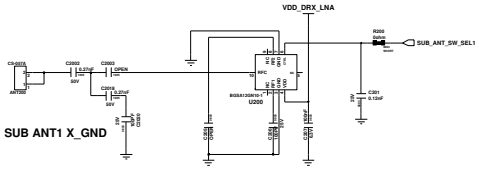

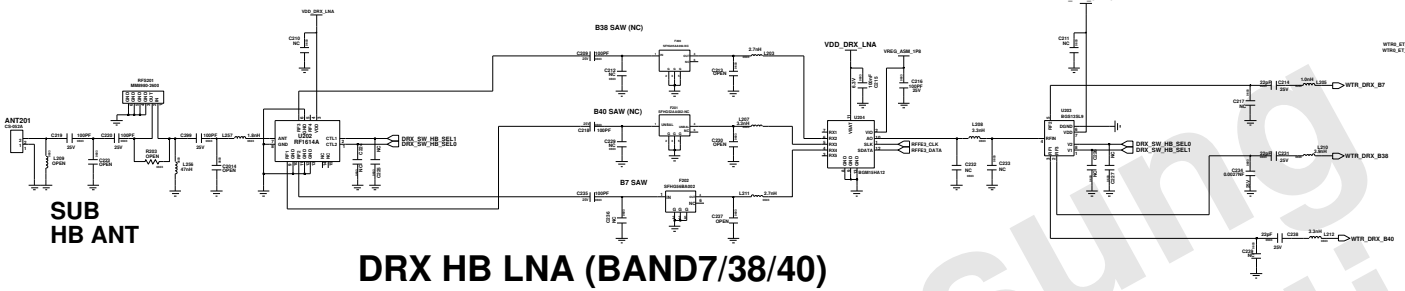

DRX HB LNA (BAND7/38/40)

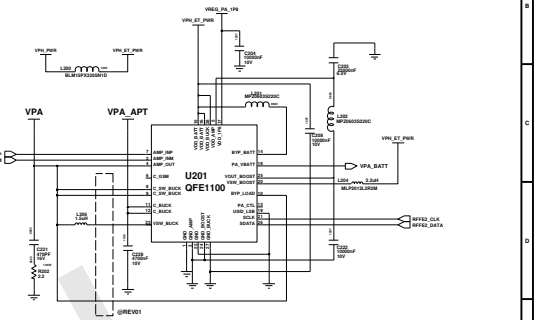

PA PMIC

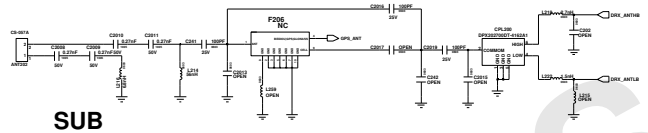

SUB HB SW (BAND7/38/40)

SUB MLB SW (BAND1/2/3/5/8/20)

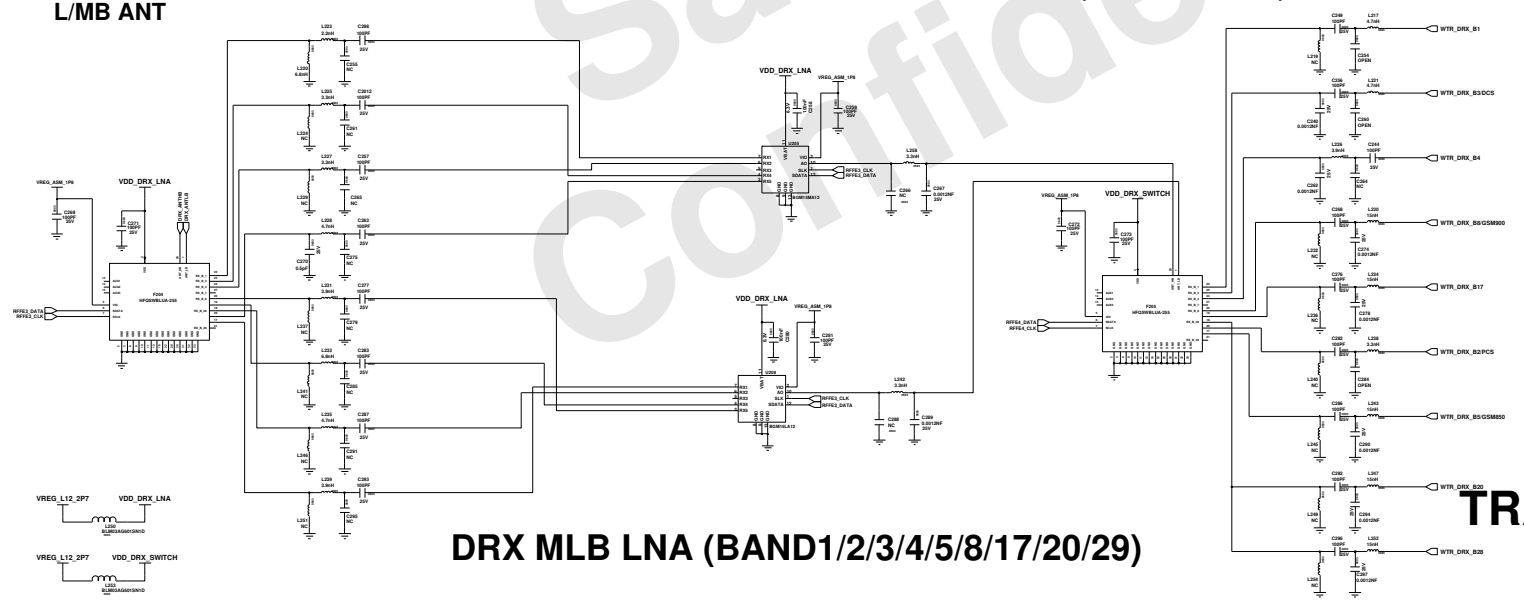

DRX MLB LNA (BAND1/2/3/4/5/8/17/20/29)

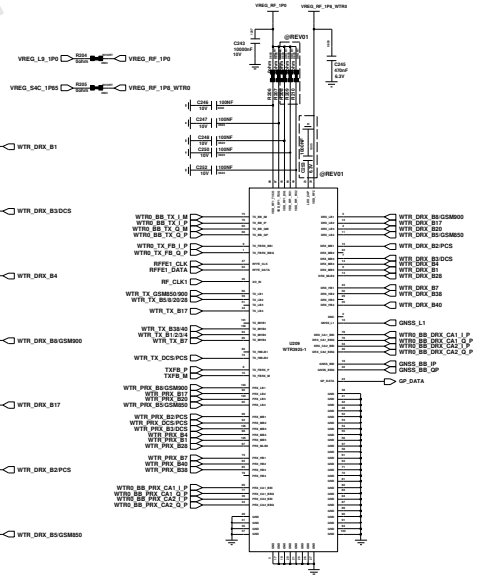

TRANCEIVER_#1

Engineer: RAD TEAM - KOREA	SAMSUNG ELECTRONICS		
DESIGN NO: RAD TEAM - KOREA			
RAD CHK:	TITLE: SM-N910F	SIZE: A1	16.1.10.A
DOC CTRL CHK:			
RFIC ENGR CHK:			
QA CHK:	REV:	Drawing Number:	Page:
Changed By: user02	Date Changed: Friday, April 25, 2014	Time Changed: 11:39:37 am	

Samsung Confidential

SAMSUNG CONFIDENTIAL
THIS DOCUMENT CONTAINS CONFIDENTIAL AND PROPRIETARY INFORMATION OF SAMSUNG ELECTRONICS CO'S PROPERTY. DO NOT DISCLOSE TO OR DUPLICATE FOR OTHERS EXCEPT AS AUTHORIZED BY SAMSUNG.

CP PART

CP PMIC

U3000
PMD9635

U3002
MDM9235M-1

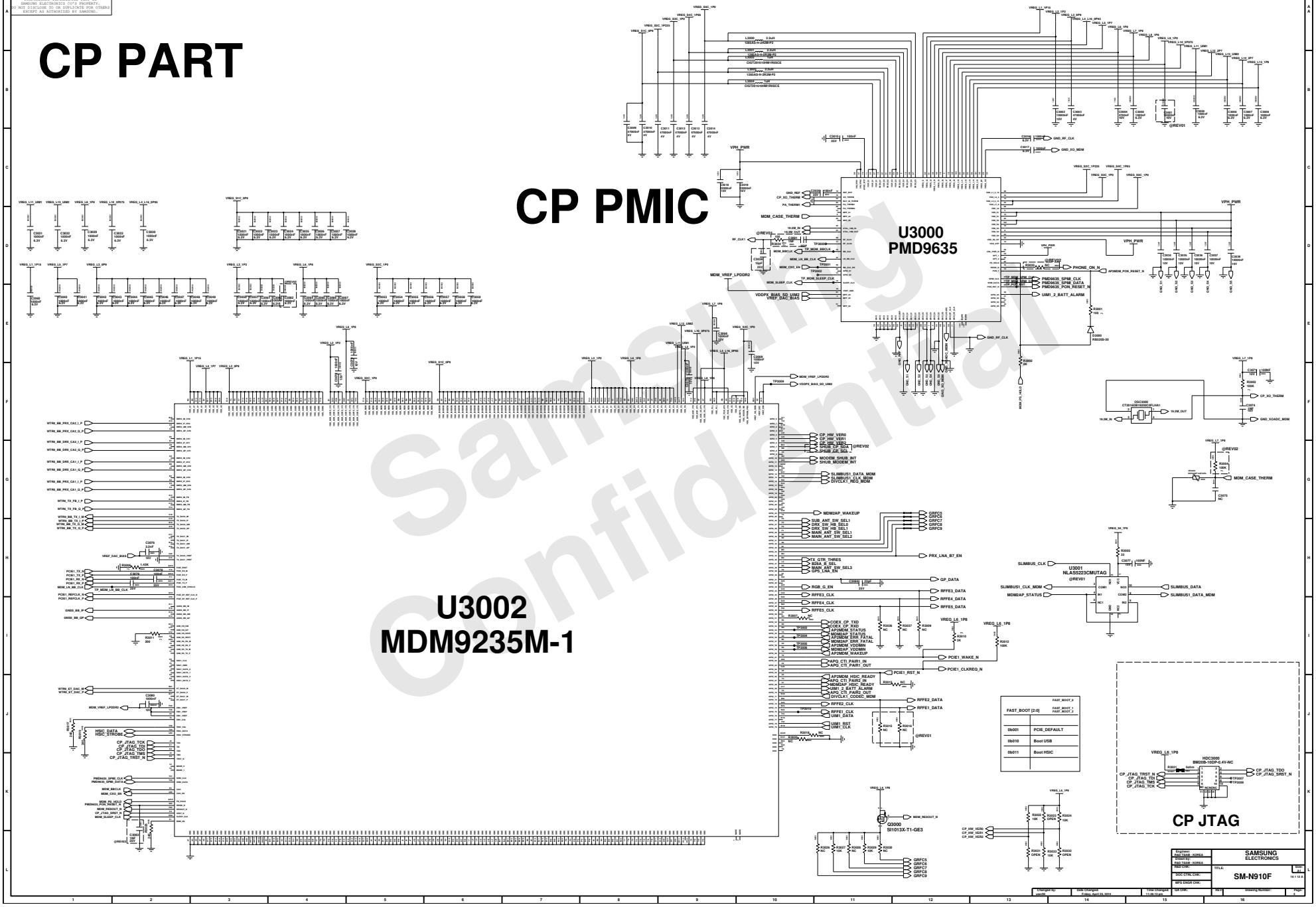

Samsung Confidential

SAMSUNG CONFIDENTIAL
THIS DOCUMENT CONTAINS CONFIDENTIAL
PROPRIETARY INFORMATION THAT IS
SAMSUNG ELECTRONICS CO'S PROPERTY.
DO NOT DISCLOSE TO OR DUPLICATE FOR OTHERS
EXCEPT AS AUTHORIZED BY SAMSUNG.

SENSORS

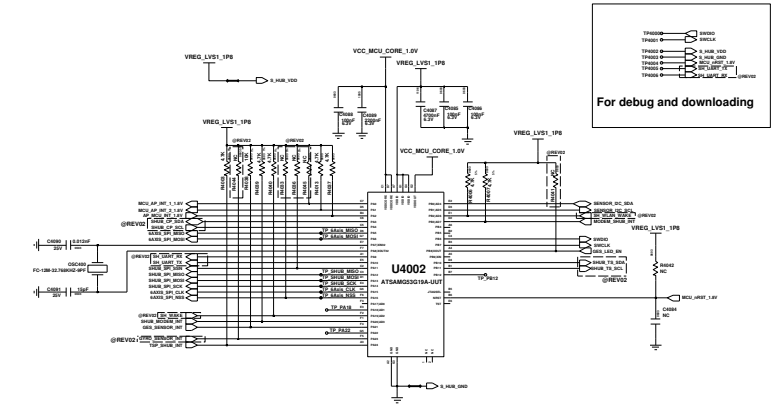

HUB
SAMG53G19A-UUT

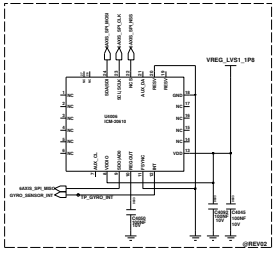

6 Axis Sensor
(GYRO,ACCEL)

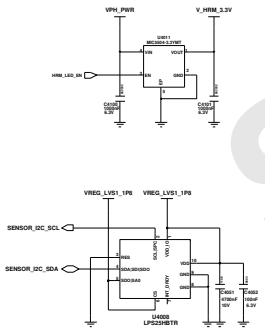

Barometer Sensor

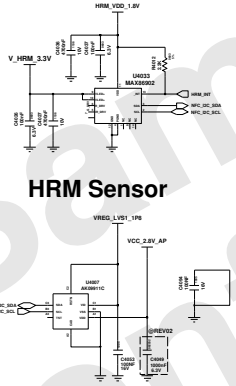

HRM Sensor

Magnetic Sensor

BT/WIFI

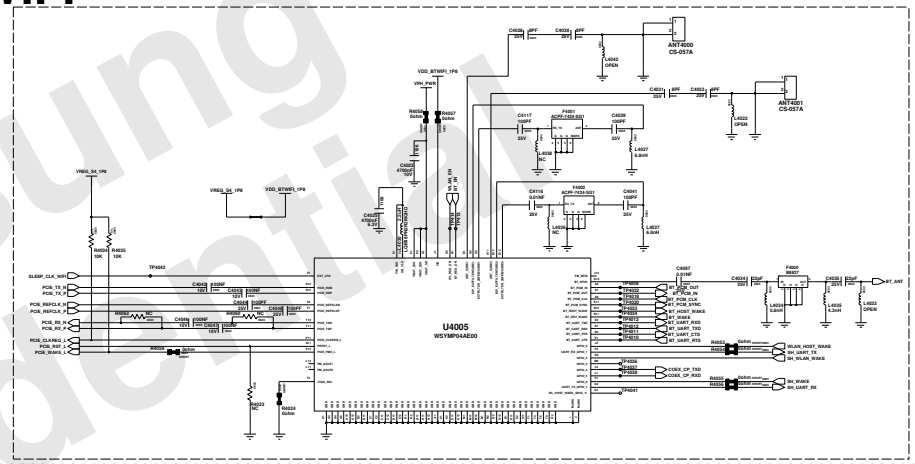

NFC

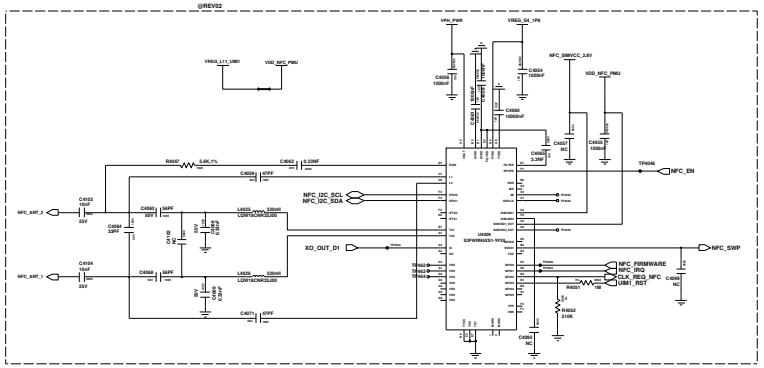

GND Contact

GPS

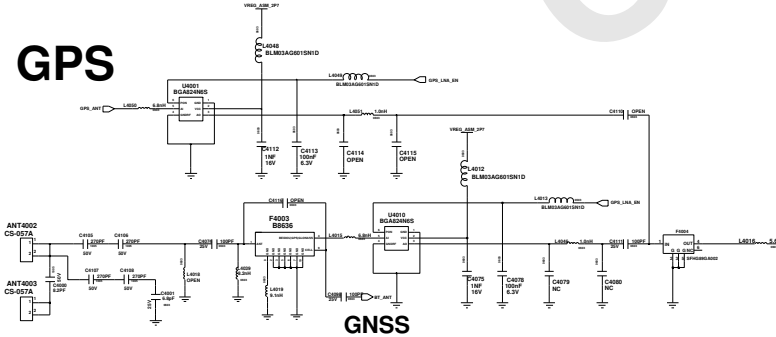

GNSS

Samsung Confidential

Engineer: RAO TAAN - KOREA	SAMSUNG ELECTRONICS	
Drawn by: RAO TAAN - KOREA		
Reg Chk:	TITLE: SM-N910F	Scale: A1
DOC CTRL CHK:		16 1 12 A
MFG ENGR CHK:		
QA CHK:	REV:	Drawing Number: Page: 4
Changed by: user02	User Changed: Friday, April 11, 2014	Time Changed: 11:20:01 am

SAMSUNG CONFIDENTIAL
THIS DOCUMENT CONTAINS CONFIDENTIAL
PROPRIETARY INFORMATION THAT IS
SAMSUNG ELECTRONICS CO'S PROPERTY.
DO NOT DISCLOSE TO OR DUPLICATE FOR OTHERS
EXCEPT AS AUTHORIZED BY SAMSUNG.

AP (APQ8084)

I2C PULL UP

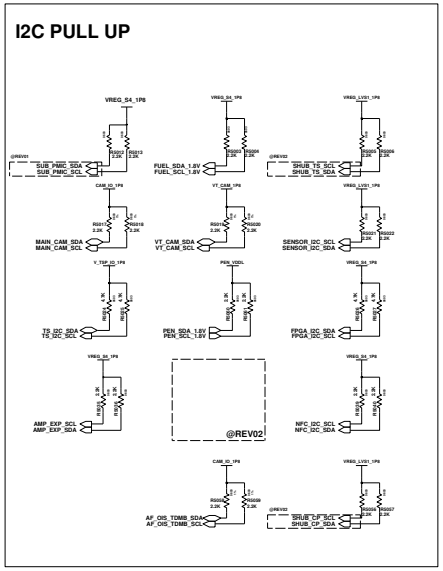

H/W REV	MEM	VER3	VER2	VER1	VER0
T_BRING_UP REV00	eMMC	0	0	0	0
T_BRING_UP REV01	eMMC	0	0	0	1
SM-N910S_REV00	ePOP	0	0	1	0
SM-N910S_REV00_EMUL	eMMC	0	0	1	1
SM-N910S_REV01	ePOP	0	1	0	0
SM-N910S_REV02	ePOP	0	1	1	0
SM-N910F_REV03	ePOP	1	0	0	0
SM-N910F_REV04	ePOP	1	0	0	1
SM-N910F_REV05	ePOP	1	0	1	0
SM-N910F_REV05_S	ePOP	1	0	1	1
SM-N910F_REV06	ePOP	1	1	0	0

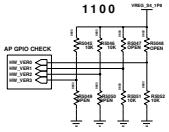

H/W REV

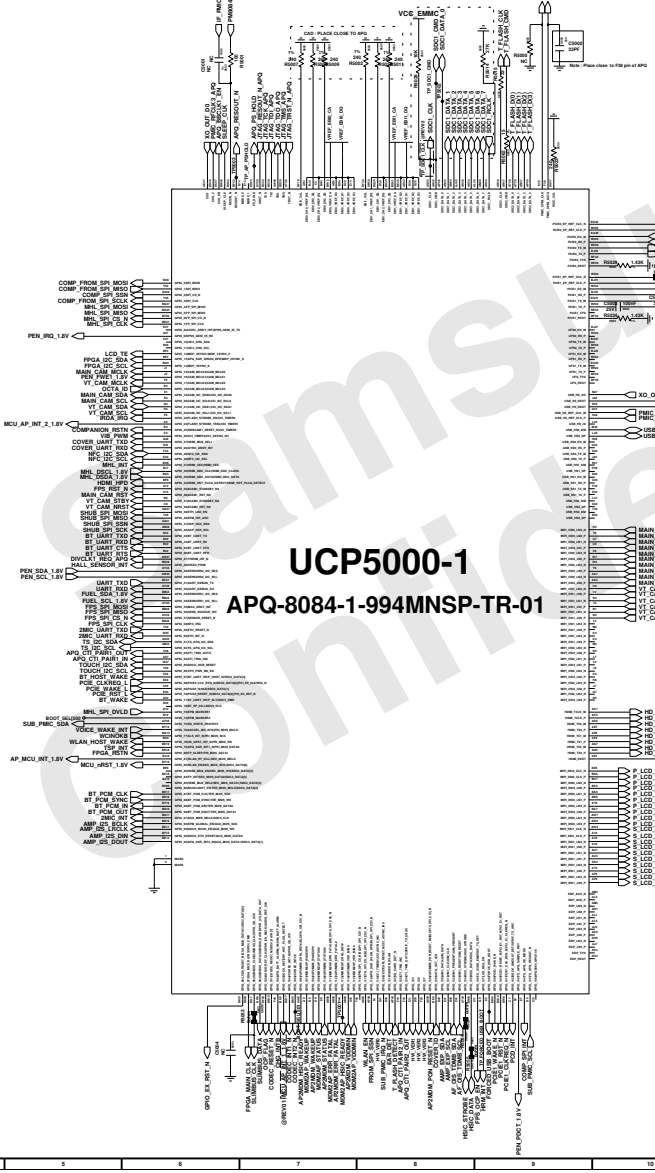

PCB JTAG

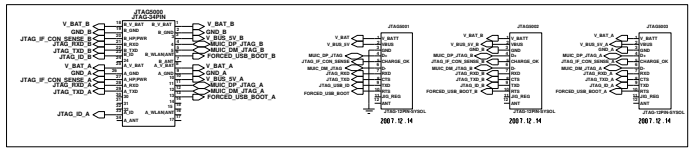

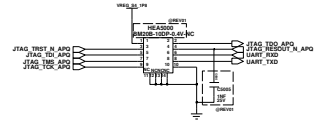

AP JTAG Connector

Designed by: sandy	Date Changed: Friday, April 25, 2014	Time Changed: 11:27:49 am	

SAMSUNG ELECTRONICS

TITLE: SM-N910F

Size: A1 | 16.1.12.A

Drawing Number: | Page: 5

user02|ecad2|10.244.89.250|20140831-125305

SAMSUNG CONFIDENTIAL
THIS DOCUMENT CONTAINS CONFIDENTIAL
PROPRIETARY INFORMATION THAT IS
SAMSUNG ELECTRONICS CO'S PROPERTY.
DO NOT DISCLOSE TO OR DUPLICATE FOR OTHERS
EXCEPT AS AUTHORIZED BY SAMSUNG.

APQ8084 - POWER

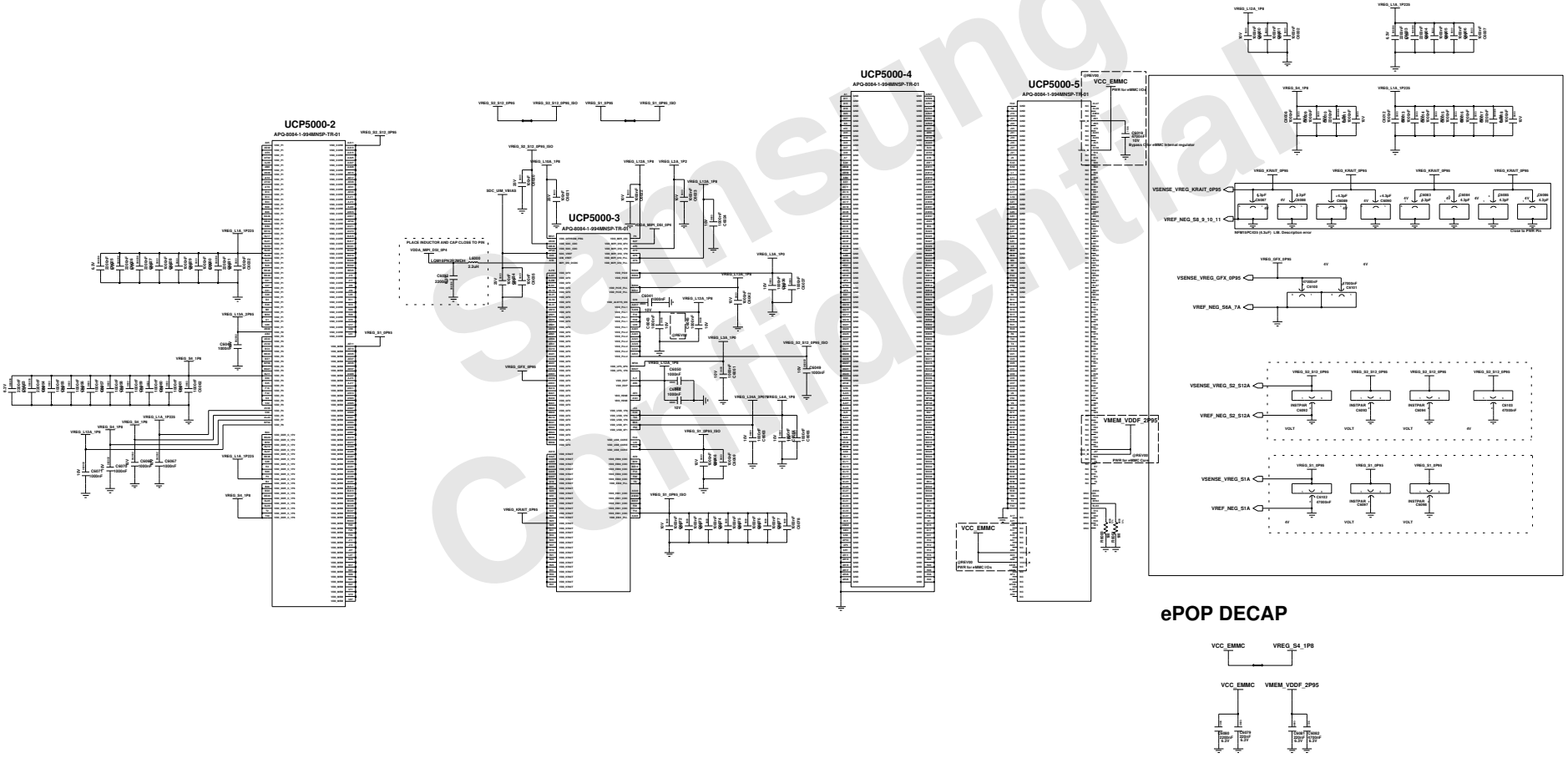

ePOP DECAP

Samsung Confidential

Engineer: RAD TEAM - KOREA		SAMSUNG ELECTRONICS	
Drawn by: RAD TEAM - KOREA			
RSD CHK:		TITLE: SM-N910F	Scale: 1:1
DOC CTRL CHK:			16 1 12 A
MFG ENGR CHK:			
Changed by: sam99	Date Changed: Friday, April 25, 2014	Time Changed: 11:28:22 am	QA CHK:
		REV:	Drawing Number:
			Page: 5

SAMSUNG CONFIDENTIAL
THE ATTACHED MATERIALS ARE THE PROPERTY OF SAMSUNG ELECTRONICS CO., LTD. UNAUTHORIZED USE OF THESE MATERIALS IS PROHIBITED. NO PART OF THESE MATERIALS MAY BE REPRODUCED, DISTRIBUTED, TRANSMITTED, OR DISCLOSED IN ANY FORM OR BY ANY MEANS WITHOUT THE PRIOR WRITTEN PERMISSION OF SAMSUNG.

AP PMIC (PMA8084)

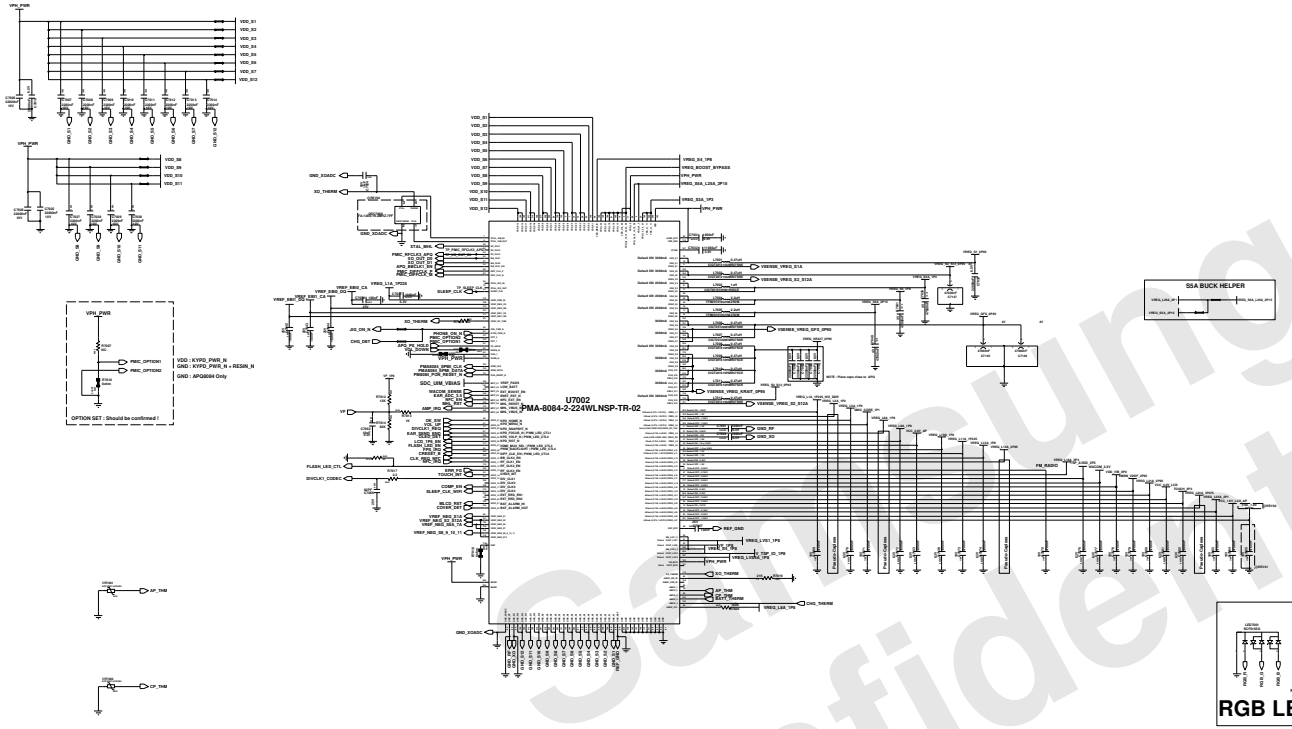

SUB_PMIC(S2MPB01)

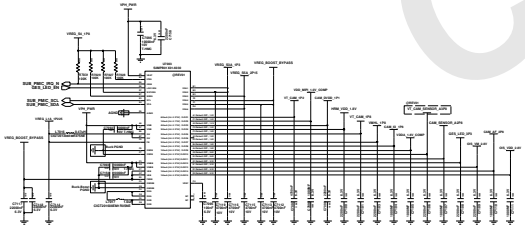

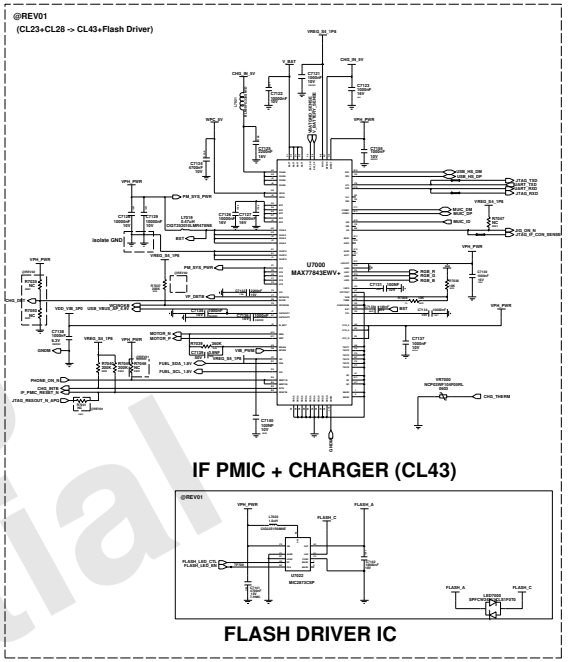

IF PMIC + CHARGER (CL43)

FLASH DRIVER IC

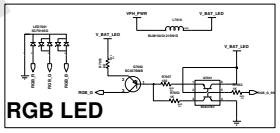

RGB LED

Battery Connector

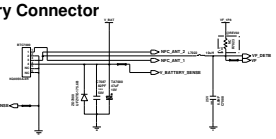

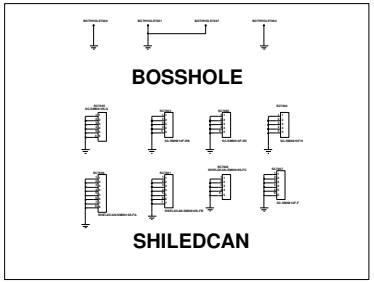

BOSSHOLE

SHILEDCAN

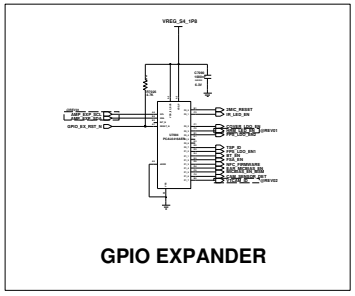

GPIO EXPANDER

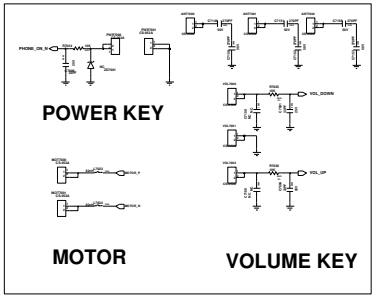

POWER KEY

MOTOR

VOLUME KEY

Project: SM-N910F_MP_Rev.0.1	SAMSUNG ELECTRONICS	
Title: Cover Sheet	Size: C	Doc No: SM-N910F
Date: 2014-08-31	Sheet: 1	Rev: 0.1

Samsung Confidential

SAMSUNG CONFIDENTIAL
THIS DOCUMENT CONTAINS CONFIDENTIAL INFORMATION THAT IS PROPRIETARY TO SAMSUNG ELECTRONICS CO'S PROPERTY. DO NOT DISCLOSE TO OR DUPLICATE FOR OTHERS EXCEPT AS AUTHORISED BY SAMSUNG.

AUDIO

Audio Codec

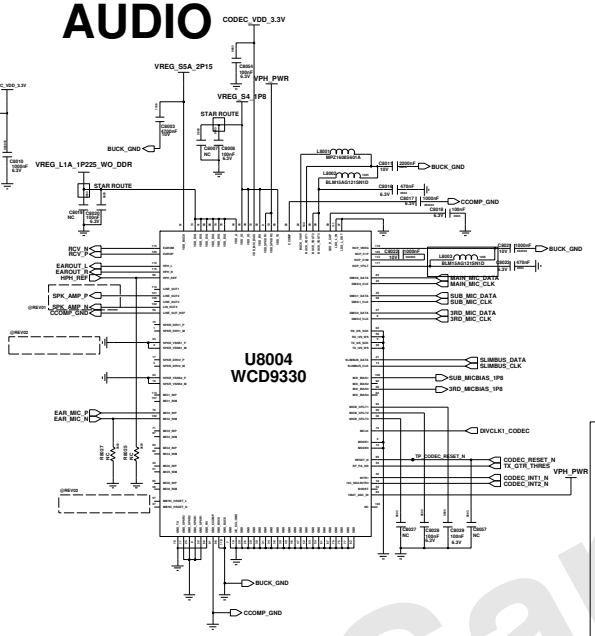

2-MIC CHIP

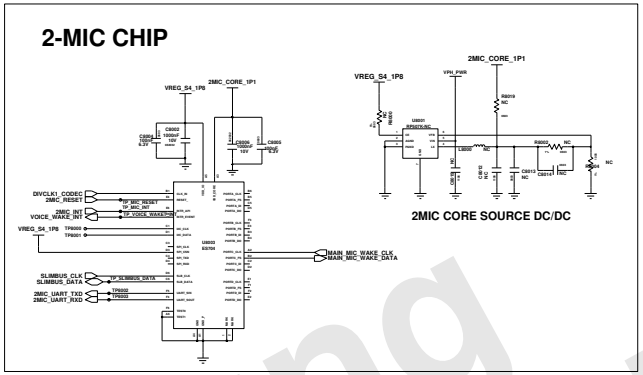

Noise Detection

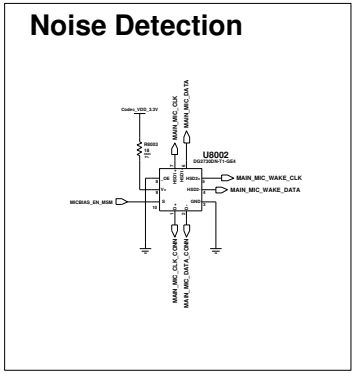

Audio AMP

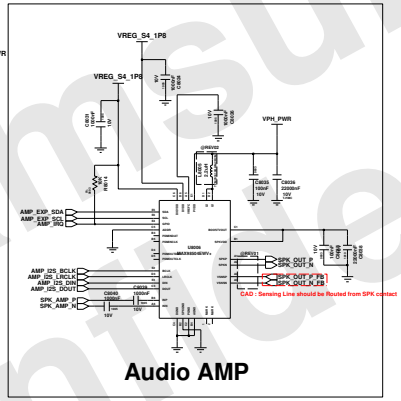

Ear MIC

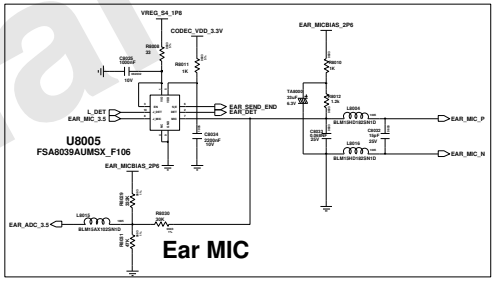

Earjack + RCV + SPK

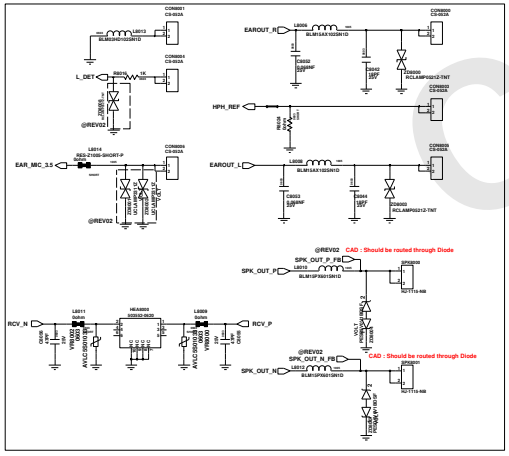

MIC Bias LDOs

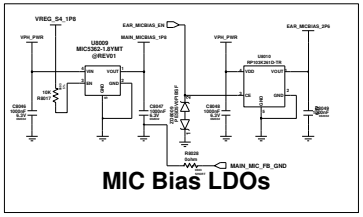

SUB MIC

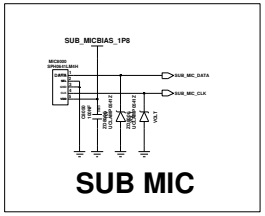

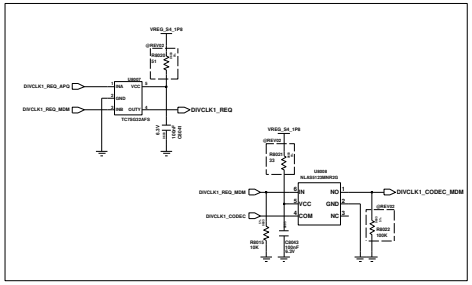

Samsung Confidential

Engineer:	SAMSUNG ELECTRONICS
TITLE:	SM-N910F
SIZE:	A1

SAMSUNG CONFIDENTIAL
THIS DOCUMENT CONTAINS CONFIDENTIAL INFORMATION AND TRADE SECRETS OF SAMSUNG ELECTRONICS CO.'S PROPERTY. DO NOT DISCLOSE TO OR DUPLICATE FOR OTHERS EXCEPT AS AUTHORIZED BY SAMSUNG.

CAMERA

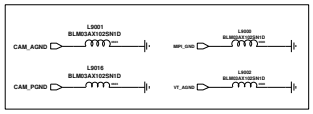

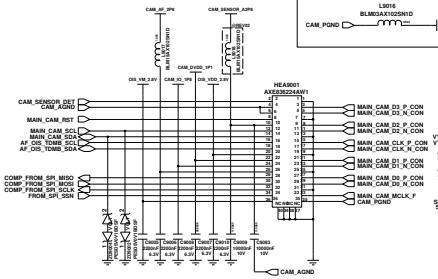

16M_Camera Connector (MIPI)

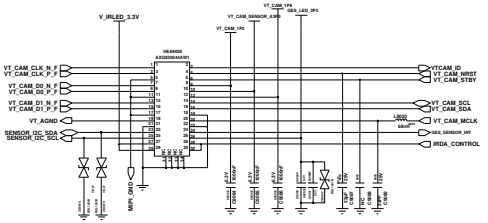

VT_CAM(3.7M)

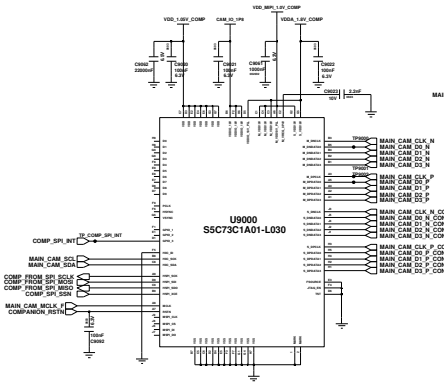

COMPANION IC

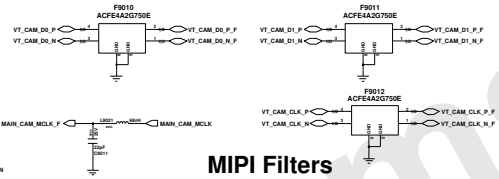

MIPI Filters

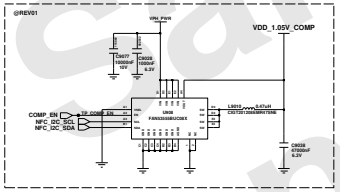

DISPLAY (For WQHD)

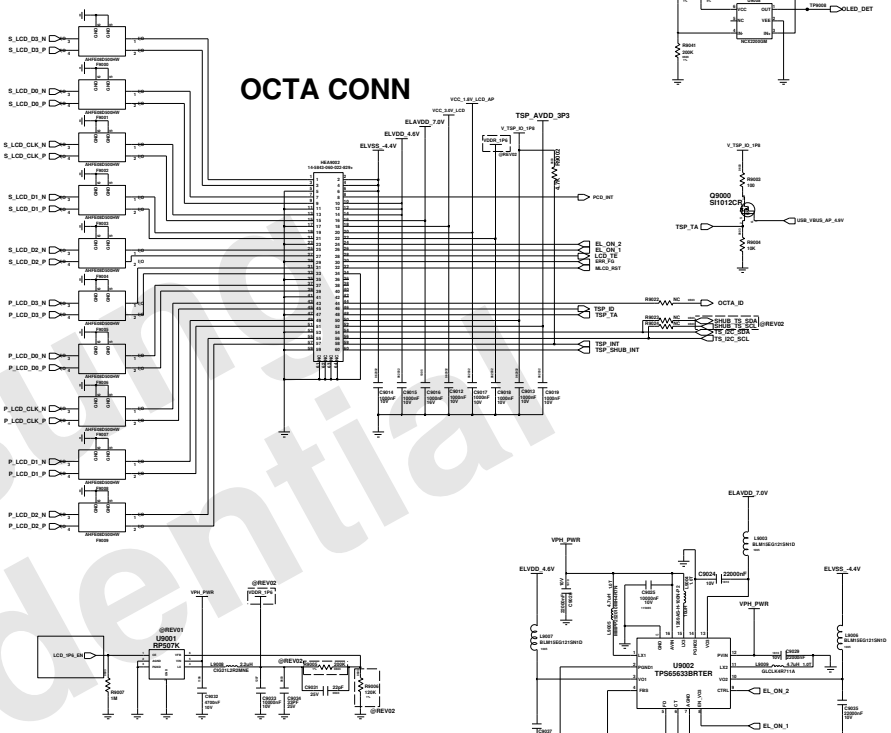

DC/DC DDI_CORE 1.6V

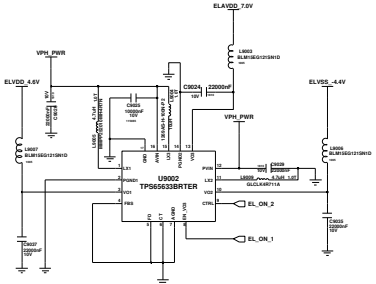

HD OCTA DC-DC

FPS

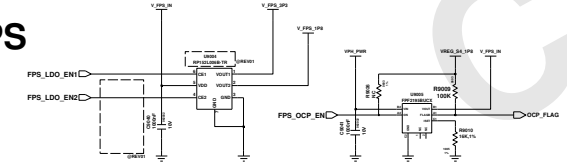

FPS OCP and PWR

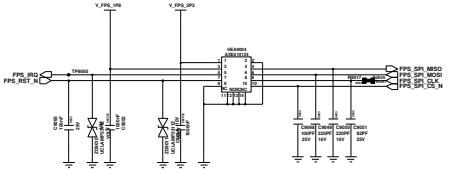

FPS IF Conn

SUB FPCB IF CONN.

(USB2.0 / USB3.0 / Main ANT / TOUCH)

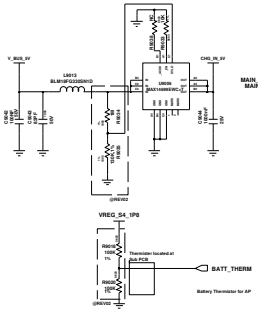

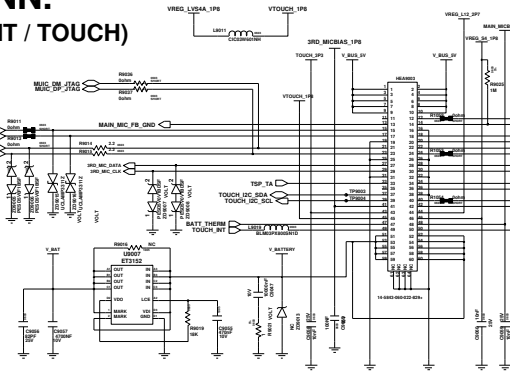

Samsung Confidential

SAMSUNG CONFIDENTIAL
THIS DOCUMENT CONTAINS CONFIDENTIAL PROPRIETARY INFORMATION THAT IS SAMSUNG ELECTRONICS CO'S PROPERTY. DO NOT DISCLOSE TO OR DUPLICATE FOR OTHERS EXCEPT AS AUTHORIZED BY SAMSUNG.

WACOM PART

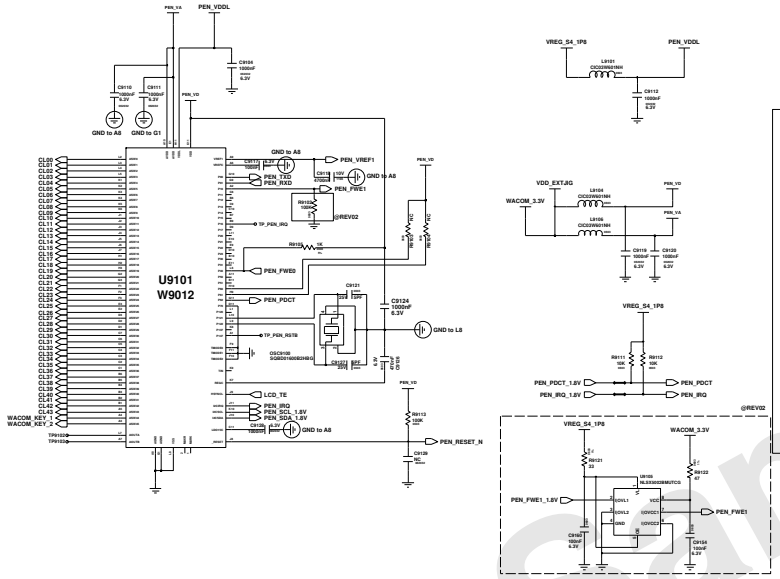

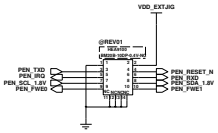

WACOM JTAG

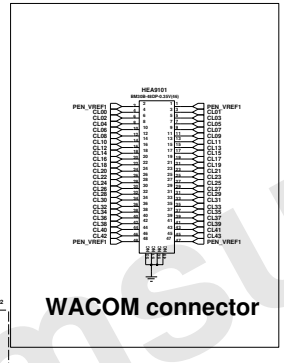

WACOM connector

MHL 3.0

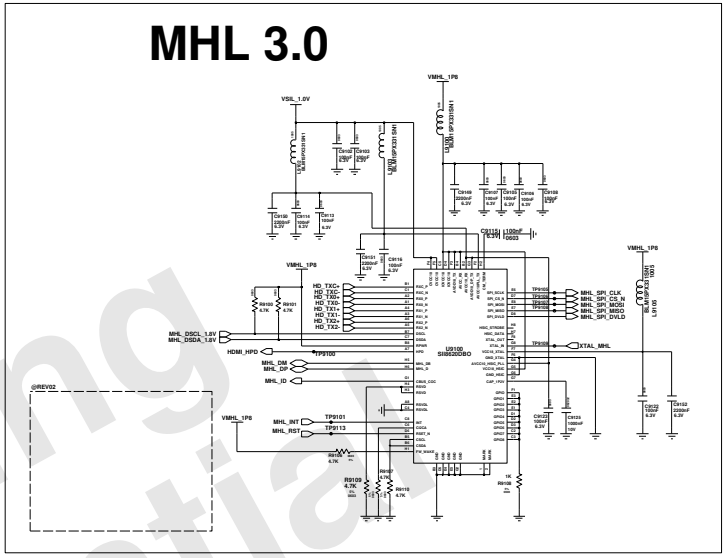

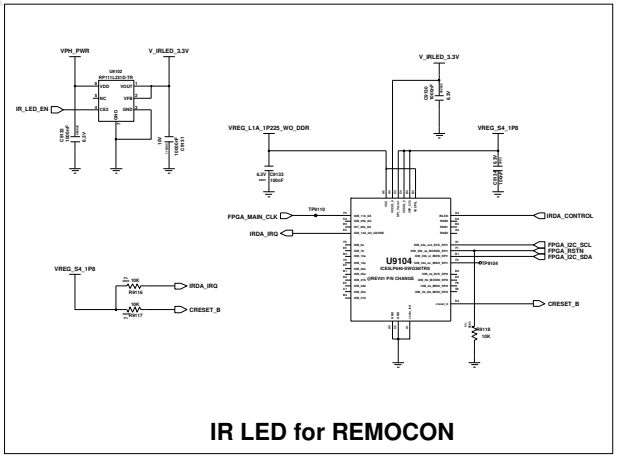

IR LED for REMOCON

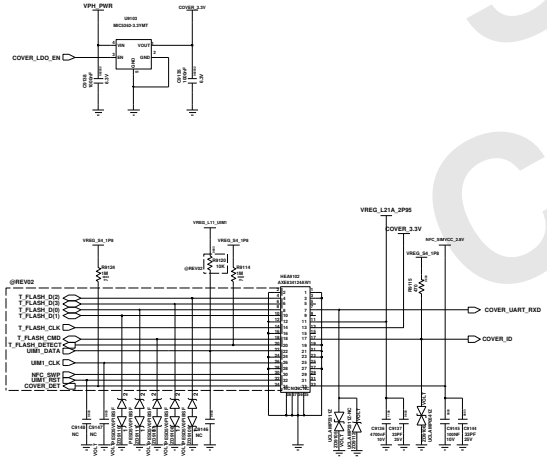

SD/SIM CARD FPCB CONN

(SD SOCKET, SIM SOCKET, Wireless Charging, Power Filp)

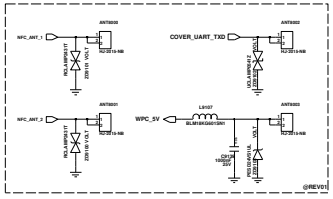

ACC. Conn FPCB CONN

(NFC, Cover UART)

Samsung Confidential

Engineer: RND TEAM - KOREA	SAMSUNG ELECTRONICS	
Drawn by: RND TEAM - KOREA		
Rev Chk:	TITLE: SM-N910F	Scale: A1
DOC CTRL CHK:		16 1 12 A
MFG ENGR CHK:		
Changed by: user02	Date Changed: Saturday, April 12, 2014	Time Changed: 11:36:02 am
QA CHK:	REV:	Drawing Number:
		Page: 10

user02|ecad2|10.244.89.250|20140831-125312

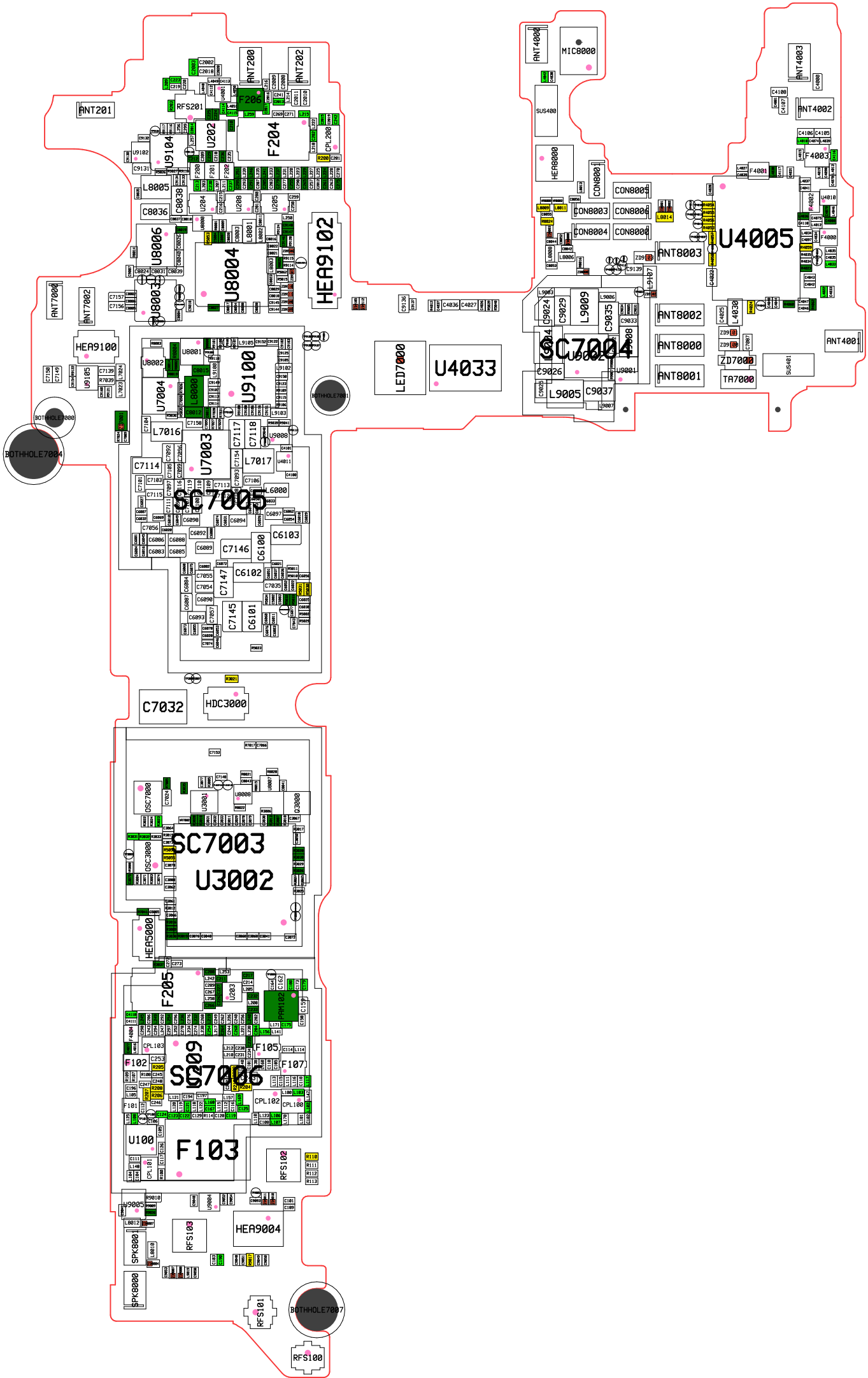

ANT201
ANT200
ANT202
RFS201
F206
F204
U202
U9104
CPL200
L8005
C8036
C8038
U8006
U8004
HEA9102
U8003
ANT7000
ANT7002
HEA9100
U9105
U8001
U8002
U9100
U7004
L8000
L7016
U7003
C7117
C7118
L7017
C7114
SC7005
C6103
C7146
C6100
C6102
C7147
C7145
C6101
BOTHHOLE7000
BOTHHOLE7004
BOTHHOLE7001
LED7000
U4033
ANT4000
MIC8000
SUS400
HEA8000
CON8001
CON8005
CON8003
CON8006
CON8004
CON8000
ANT8003
U4005
ANT4003
ANT4002
F4003
F4001
F4002
F4000
ANT8002
ANT8000
ANT8001
L9009
C9035
C9024
C9029
C9026
L9005
C9037
SC7004
ZD7000
TA7000
ANT4001
SUS401
C7032
HDC3000
OSC7000
OSC3000
SC7003
U3002
HEA5000
F205
U203
PAM102
F105
F107
F102
SC7006
CPL103
CPL102
CPL100
F101
U100
F103
RFS102
U9005
RFS103
HEA9004
SPK8001
SPK8000
RFS101
BOTHHOLE7007
RFS100

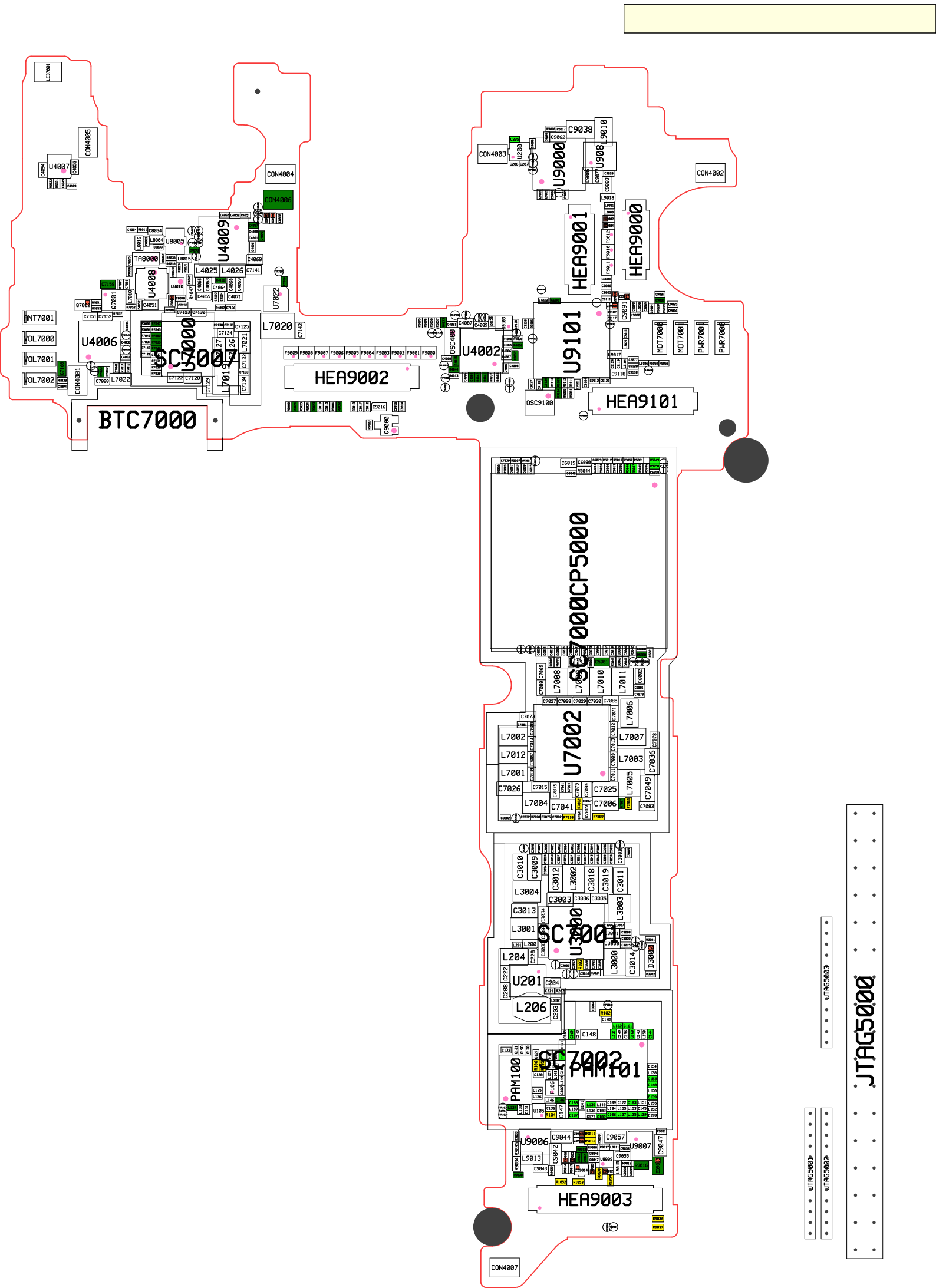

BTC7000
SC7007
U4006
U4008
U4009
U4007
U4002
U9101
U9000
U9008
HEA9001
HEA9000
HEA9002
HEA9101
HEA9003
SC7000CP5000
U7002
SC7001
U3000
SC7002
PAM101
PAM100
U201
U9006
U9007
JTAG5000
JTAG5001
JTAG5002
JTAG5003
CON4001
CON4002
CON4003
CON4004
CON4005
CON4006
CON4007
ANT7001
VOL7000
VOL7001
VOL7002
MOT7000
MOT7001
PWR7001
PWR7000
OSC9100
OSC400