SAMSUNG

GSM TELEPHONE

SGH-i200

SERVICE Manual

UMTS TELEPHONE

CONTENTS

1. Safety Precautions
2. Specification
3. Product Function
4. Array course control
5. Exploded View and Parts list
6. MAIN Electrical Parts List
7. Disassembly and Assembly Instructions
8. Block Diagrams
9. PCB Diagrams
10. Chart of Troubleshooting
11. Reference data

SAMSUNG ELECTRONICS

GSPN (Global Service Partner Network)

Country	Web Site
North America	service.samsungportal.com
Latin America	latin.samsungportal.com
CIS	cis.samsungportal.com
Europe	europe.samsungportal.com
China	china.samsungportal.com
Asia	asia.samsungportal.com
Mideast & Africa	mea.samsungportal.com

This Service Manual is a property of Samsung Electronics Co.,Ltd.
Any unauthorized use of Manual can be punished under applicable International and/or domestic law.

© Samsung Electronics Co.,Ltd.

2008. 05 Rev.1.0

2. Specification

2-1. GSM & WCDMA General Specification

	GSM900 Phase 1	EGSM 900 Phase 2	DCS1800 Phase 1	PCS1900	WCDMA2100
Freq. Band[MHz] Uplink/Downlink	890~915 935~960	880~915 925~960	1710~1785 1805~1880	1850~1910 1930~1990	1920~1980 2110~2170
ARFCN range	1~124	0~124 & 975~1023	512~885	512~810	9612~9888 10562~10838
Tx/Rx spacing	45 MHz	45 MHz	95 MHz	80 MHz	190MHz
Mod. Bit rate/ Bit Period	270.833 kbps 3.692 us	270.833 kbps 3.692 us	270.833 kbps 3.692 us	270.833 kbps 3.692 us	3.84 Mcps
Time Slot Period/Frame Period	576.9 us 4.615 ms	576.9 us 4.615 ms	576.9 us 4.615 ms	576.9 us 4.615 ms	-
Modulation	0.3 GMSK	0.3 GMSK	0.3 GMSK	0.3 GMSK	QPSK
MS Power	33 dBm~13 dBm	33 dBm~5 dBm	30 dBm~0 dBm	30 dBm~0 dBm	24 dBm ~
Power Class	5 pcl ~ 15 pcl	5 pcl ~ 19 pcl	0 pcl ~ 15 pcl	0 pcl ~ 15 pcl	3 Class
Sensitivity	-102 dBm	-102 dBm	-100 dBm	-100 dBm	-106.7 dBm
TDMA Mux	8	8	8	8	-
Cell Radius	35 Km	35 Km	2 Km	-	-

SAMSUNG Proprietary-Contents may change without notice
This Document can not be used without Samsung's authorization

2-2. GSM TX power class

TX Power control level	GSM900
5	33±2 dBm
6	31±2 dBm
7	29±2 dBm
8	27±2 dBm
9	25±2 dBm
10	23±2 dBm
11	21±2 dBm
12	19±2 dBm
13	17±2 dBm
14	15±2 dBm
15	13±2 dBm
16	11±3 dBm
17	9± 3dBm
18	7±3 dBm
19	5±3 dBm

TX Power control level	DCS1800
0	30±3 dBm
1	28±3 dBm
2	26±3 dBm
3	24±3 dBm
4	22±3 dBm
5	20±3 dBm
6	18±3 dBm
7	16±3 dBm
8	14±3 dBm
9	12±4 dBm
10	10±4 dBm
11	8±4 dBm
12	6±4 dBm
13	4±4 dBm
14	2±5 dBm
15	0±5 dBm

TX Power control level	PCS1900
0	30±3 dBm
1	28±3 dBm
2	26±3 dBm
3	24±3 dBm
4	22±3 dBm
5	20±3 dBm
6	18±3 dBm
7	16±3 dBm
8	14±3 dBm
9	12±4 dBm
10	10±4 dBm
11	8±4 dBm
12	6±4 dBm
13	4±4 dBm
14	2±5 dBm
15	0±5 dBm

WCDMA2100 Power Class 3		
Power	dBm	Tol
Max	+24	+1/-3
Min	-50	under

SAMSUNG Proprietary-Contents may change without notice
This Document can not be used without Samsung's authorization

5. Exploded View and Parts List

5-1. Cellular phone Exploded View

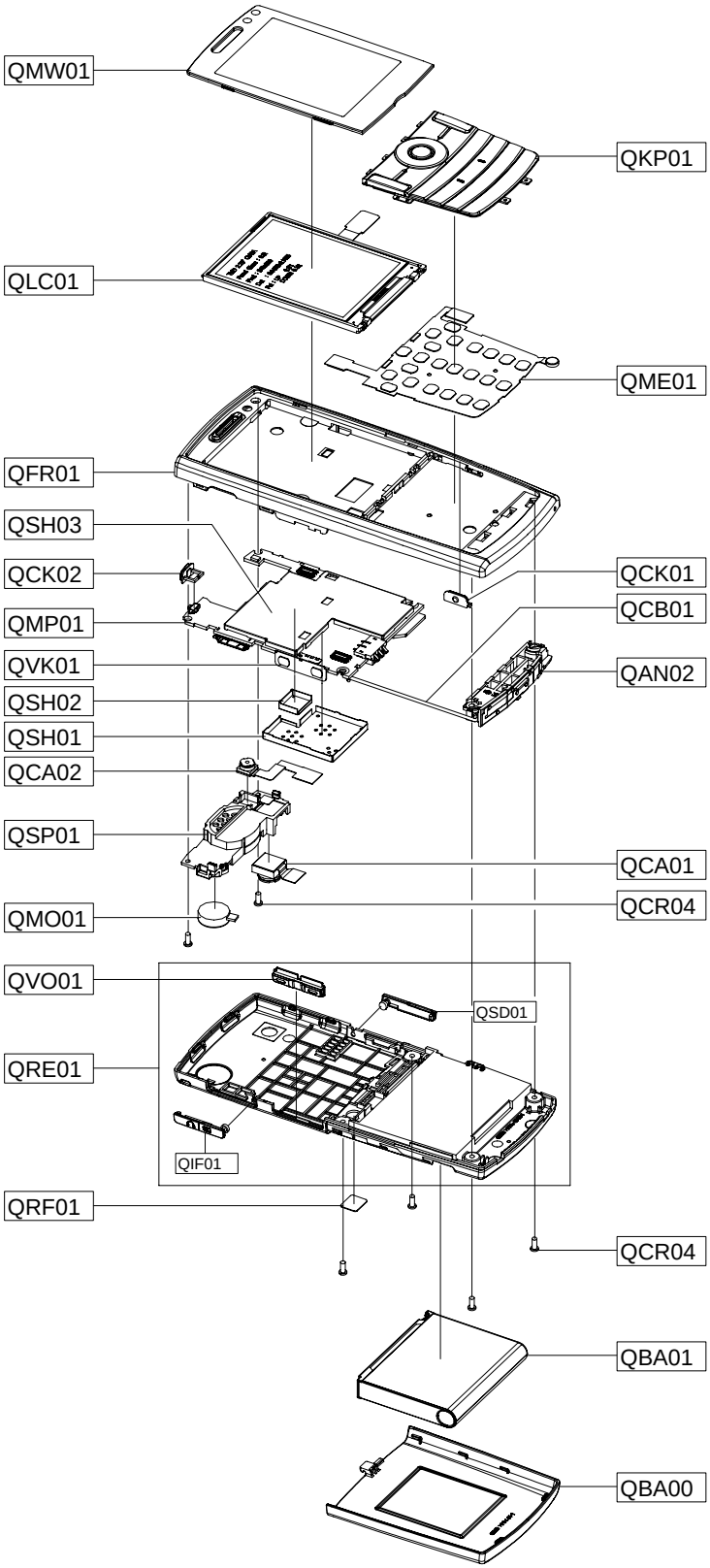

SAMSUNG Proprietary-Contents may change without notice
This Document can not be used without Samsung's authorization

5-2. Cellular phone Parts list

Design LOC		Discription	SEC CODE
QAN02		INTENNA-SGH_I200	GH42-01529A
QBA00		PMO COVER-BATT	GH72-47069A
QBA01		INNER BATTERY PACK-1100MAH,BLK	GH43-02664A
QCA01		CAMERA MODULE-SGH_I200 (2M)	GH59-05552A
QCA02		CAMERA MODULE-SGH_I200 (CIF)	GH59-05553A
QCB01		COAXIAL CABLE-SGH-I200	GH39-01060A
QCK01		PMO KEY-CAMERA	GH72-47077A
QCK02		PMO KEY-POWER	GH72-47076A
QCR04		SCREW-MACHINE	6001-001479
QFR01		ASSY CASE-FRONT	GH98-07960A
QKP01		ASSY KEYPAD-(XEF/EKA)	GH98-07961A
QLC01		ELA UNIT-SGHI200 LCD MODULE	GH96-03010A
QME01		KEY FPCB-SGHI540 KEY PAD FPCB	GH59-05541A
QMO01		MOTOR DC	GH31-00088A
QMP01		PBA MAIN-SGHI200	GH92-01442A
QMW01		ASSY CASE-WINDOW MAIN_ORANGE	GH98-09271A
QRF01		TAPE-RF SHEET	GH74-37976A
QSH01		IPR SHIELD-CAN TOP B	GH70-03380A
QSH02		IPR SHIELD-CAN TOP A	GH70-03381A
QSH03		IPR SHIELD-CAN BOTTOM	GH70-03382A
QSP01		ASSY ETC-SPK MODULE	GH59-05901A
QVK01		KEY FPCB-VOLUME KEY	GH59-05542A
QVO01		PMO KEY-VOLUME	GH72-47075A
QRE01		ASSY CASE-REAR	GH98-07959A
	QIF01	PMO COVER-IF	GH72-47071A
	QSD01	PMO COVER-SD	GH72-47070A

SAMSUNG Proprietary-Contents may change without notice
This Document can not be used without Samsung's authorization

7. Disassembly and Assembly Instructions

7-1. Disassembly

1 	2
1) Unscrew the 4 point REAR Screws.	1) Dissolve the READ LOCKER. (6 red points: hook point) ※ **Caution** 1) Be careful not to scratch the appearance or damage the framework.
3 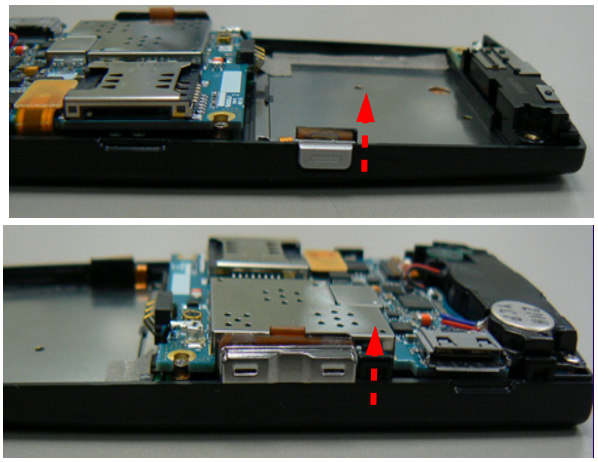	4 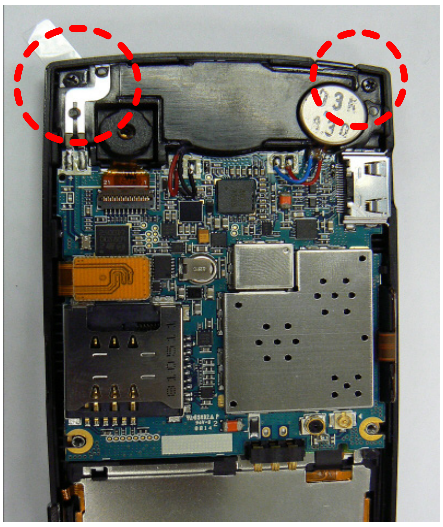
1) Remove the CAMERA, VOLUME KEY.	1) Unscrew the 2 point Speaker bracket screw.

SAMSUNG Proprietary-Contents may change without notice
This Document can not be used without Samsung's authorization

5

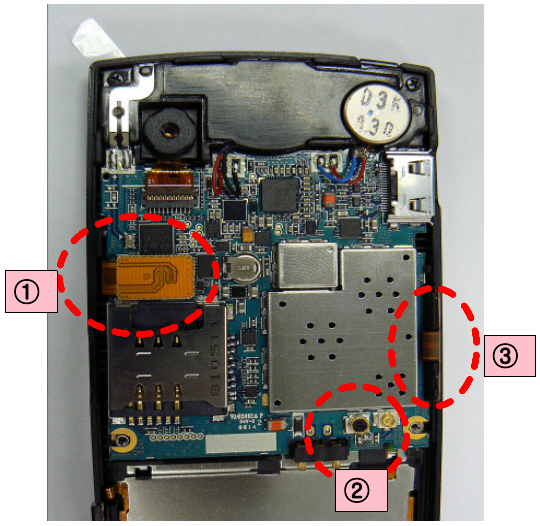

1) Disconnect LCD connector(①) and RF connector(②).
2) Detach the VOLUME KEY FPCB(③).

※ **Caution**

1) Take precaution not to tear the FPCB.

6

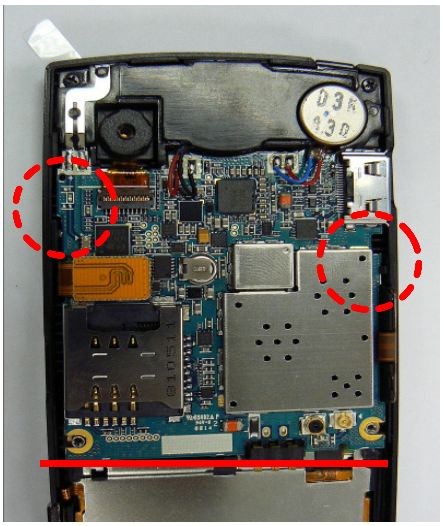

1) Unhook right and left lockers..

※ **Caution**

1) Do not lift the PBA up to remove after unhooking.

7

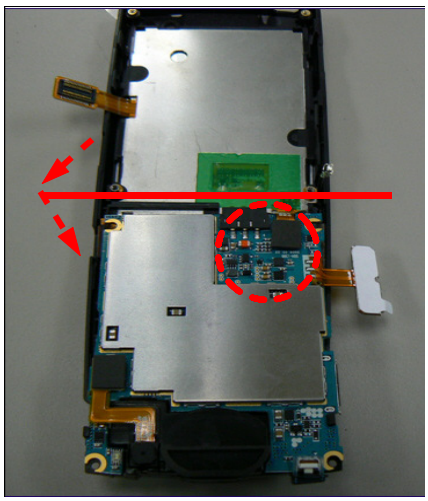

1) Turn the PBA along the red line.
2) Disconnect the KEY PBA connector.

※ **Caution**

1) Do not take the PBA apart before disconnecting the

8

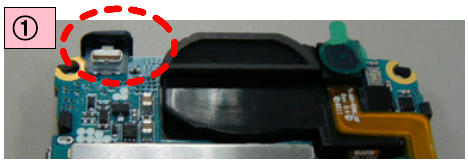

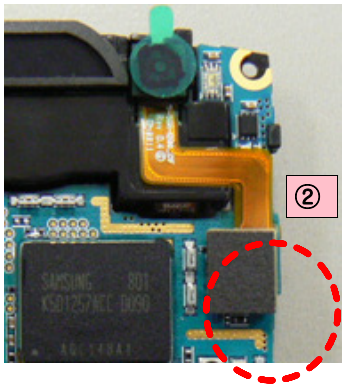

1) Dissolve the POWER KEY(①).
2) Disconnect the CIF CAMERA connector(②)..

SAMSUNG Proprietary-Contents may change without notice
This Document can not be used without Samsung's authorization

9 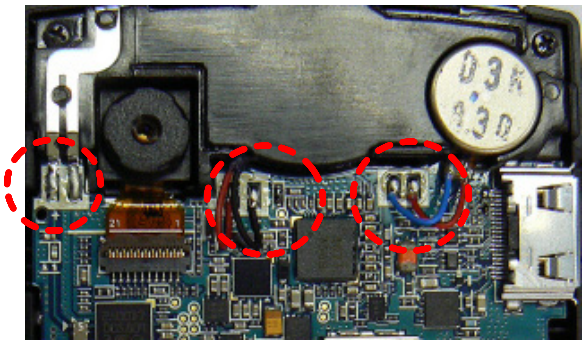	10 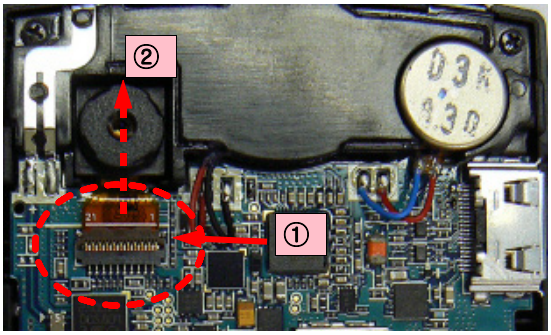
1) Remove the BT ANT, Speaker and Motor solder. ※ **Caution** 1) Be careful not to damage the Speaker bracket..	1) Flip the Camera connector locker. 2) Dissolve the Mega Camera FPCB. ※ **Caution** 1) Be careful not to break the locker.
11 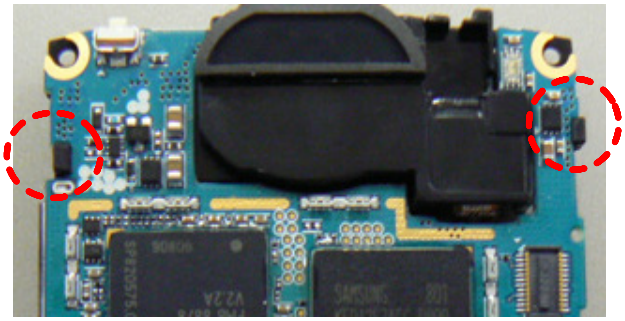	12 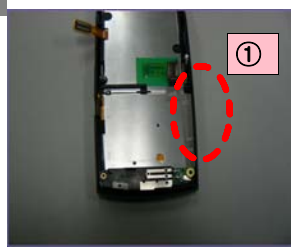 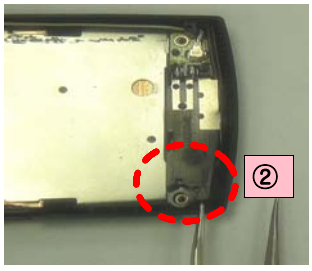
1) Unhook the Speaker bracket from the PBA and dissolve it.	1) Remove the conduction tape. 2) Take the antenna apart from FRONT..

SAMSUNG Proprietary-Contents may change without notice
This Document can not be used without Samsung's authorization

13

1) Remove the window

※ **Caution**

1) Take the window apart right side first with sharp tweezers.

14

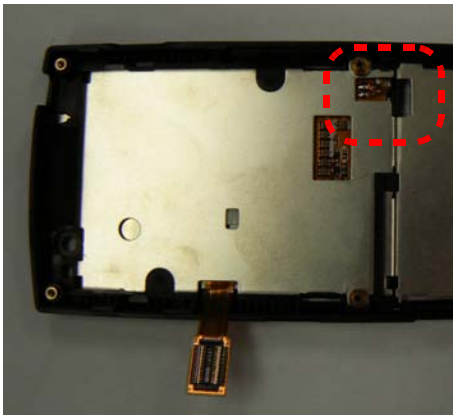

1) Take the LCD apart from FRONT.

※ **Caution**

1) Push with hard stick and make a gap between LCD and Front, then take the LCD aprart.

2) Be careful not to damage the LCD connector.

15

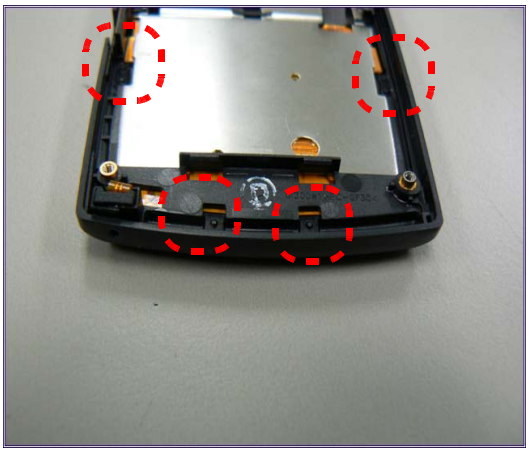

1) Remove the hanged rubber from the peg(4 points) and dissolve the Key pad.

SAMSUNG Proprietary-Contents may change without notice
This Document can not be used without Samsung's authorization

7-2. Assembly

1 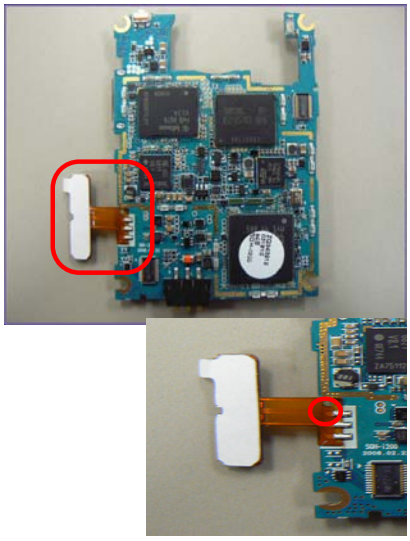	2 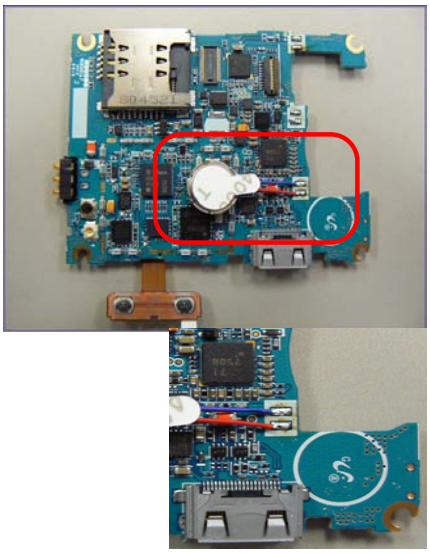
1) Solder the volume key FPCB on board, fitting the two guide hole of FPCB and Board.	1) Solder the motor on board..
3 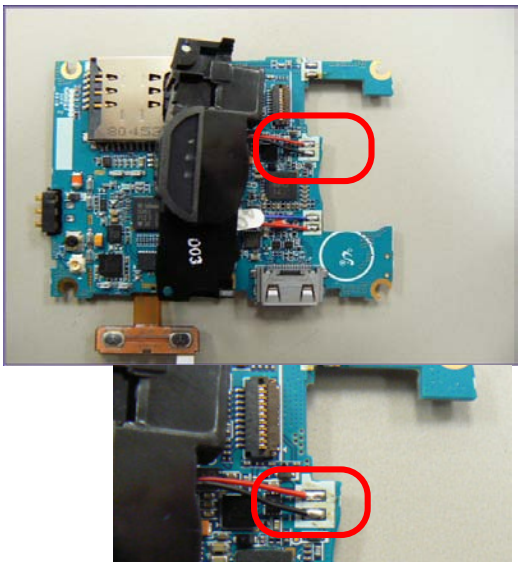	4 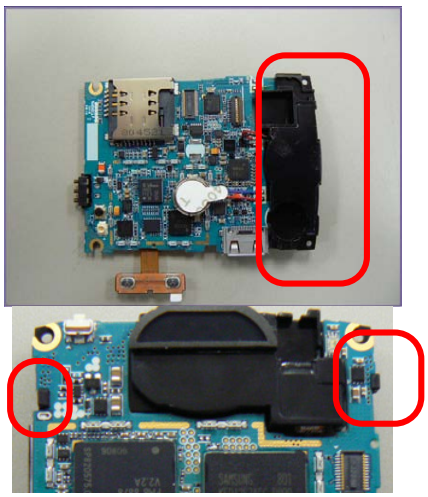
1) Solder the Speaker line of the Speaker bracket	1) Flip the Speaker bracket and hook the both side lockers.

SAMSUNG Proprietary-Contents may change without notice
This Document can not be used without Samsung's authorization

5 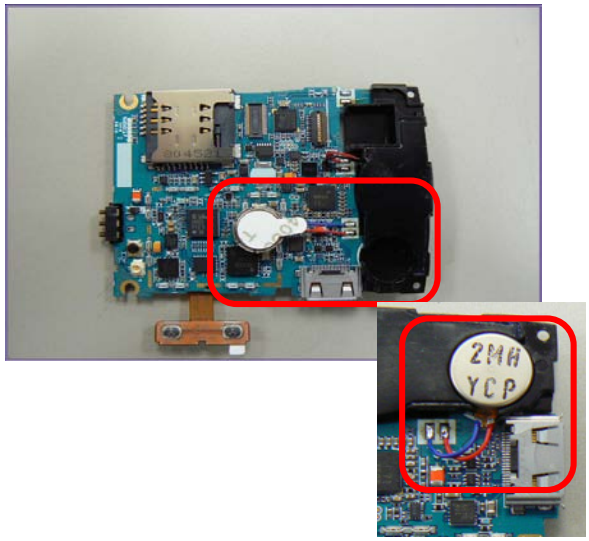 	6 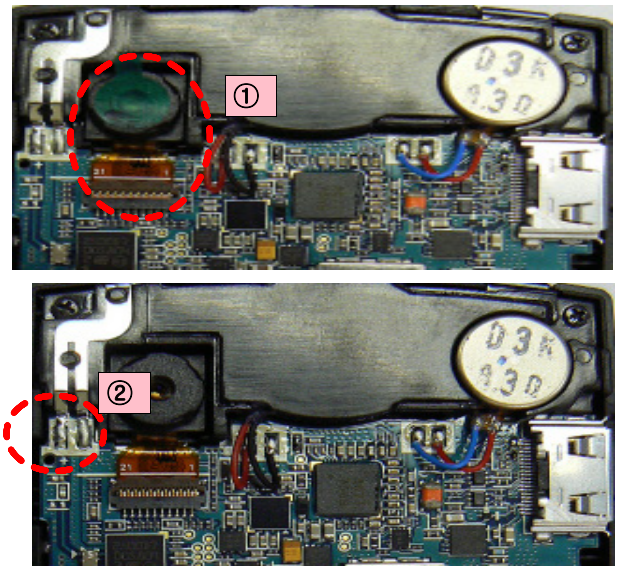
1) Take off the protection tape on motor and place the motor.	1) Place the Mega camera and insert FPCB Lock the connector and take off the protection tape. 2) Solder the BT ANT. .
7 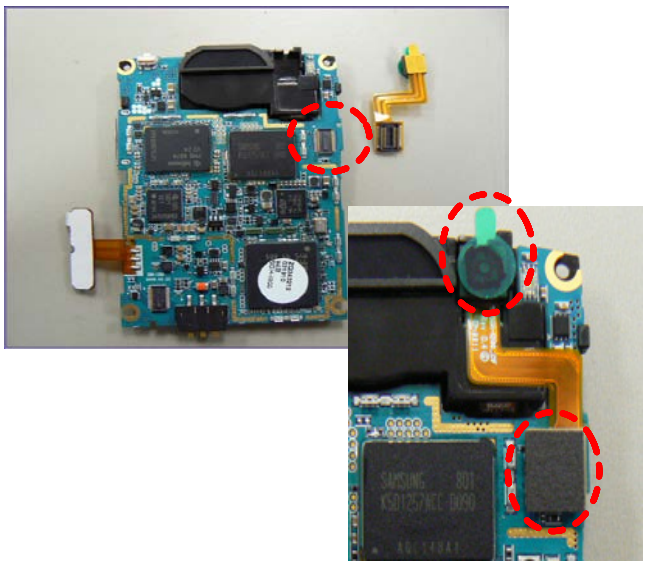	8 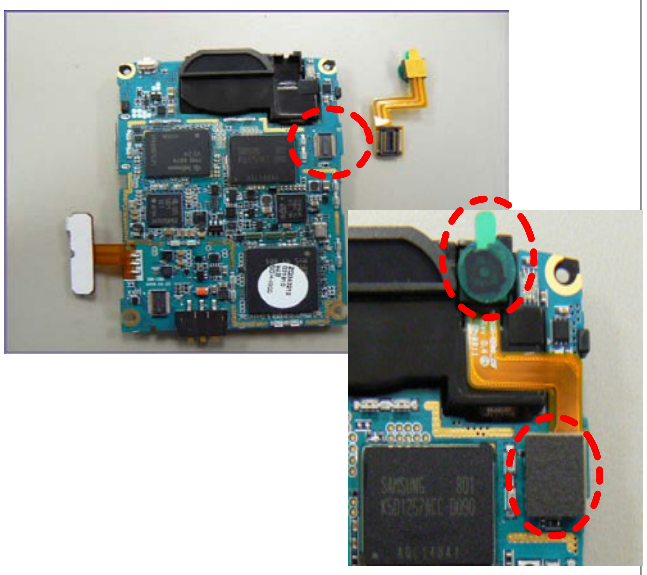
1) Connect the CIF camera and place it on the speaker bracket. 2) Take off the protection tape and attach the poron on the connector.	1) Put the F-PCB into the hole of main frame as the slide is down. ※ **Caution** Take precaution not to damage the F-PCB.

SAMSUNG Proprietary-Contents may change without notice
This Document can not be used without Samsung's authorization

9

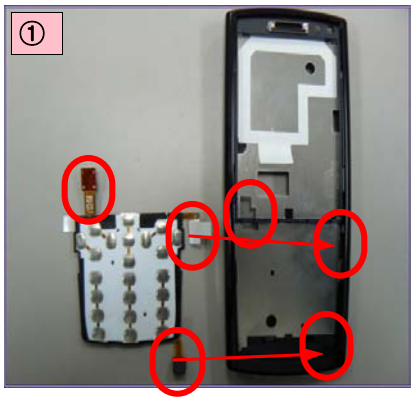

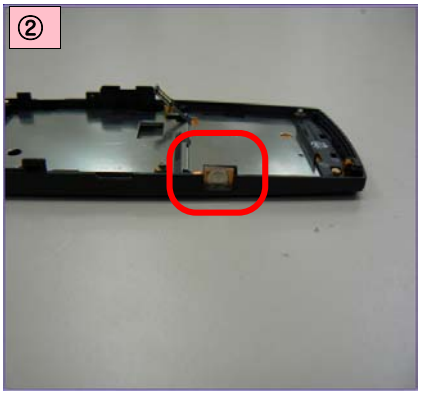

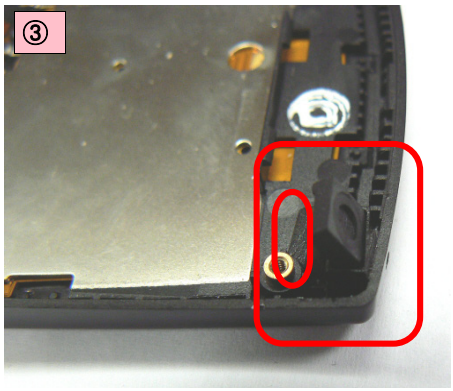

1) Place the Key PBA on the Front. Make sure the connector, mic, camera key FPCB insertion to the each hole, then attach the Key PBA on the Front.
2) Take off the protection tape on the Camera key FPCB and place it on Front.
3) Insert the mic in the mic holder and attach the mic FPCB protection poron.

10

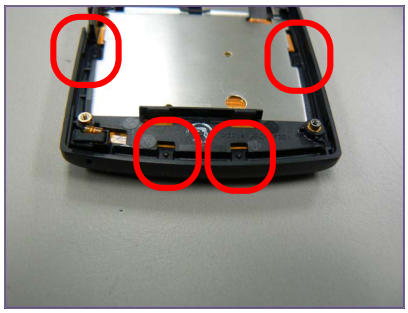

1) Check the earjack cover.

11

1) Press until Connector is sonant "Click"
2) When joint LCD CONNECTOR, be careful approximately parts damage.

SAMSUNG Proprietary-Contents may change without notice
This Document can not be used without Samsung's authorization

12

1) Take off the tape around the LCD.
2) Place the window.
(Insert right side hook first and do left side.)

1) Attach the tape exactly based on the silk line.

13

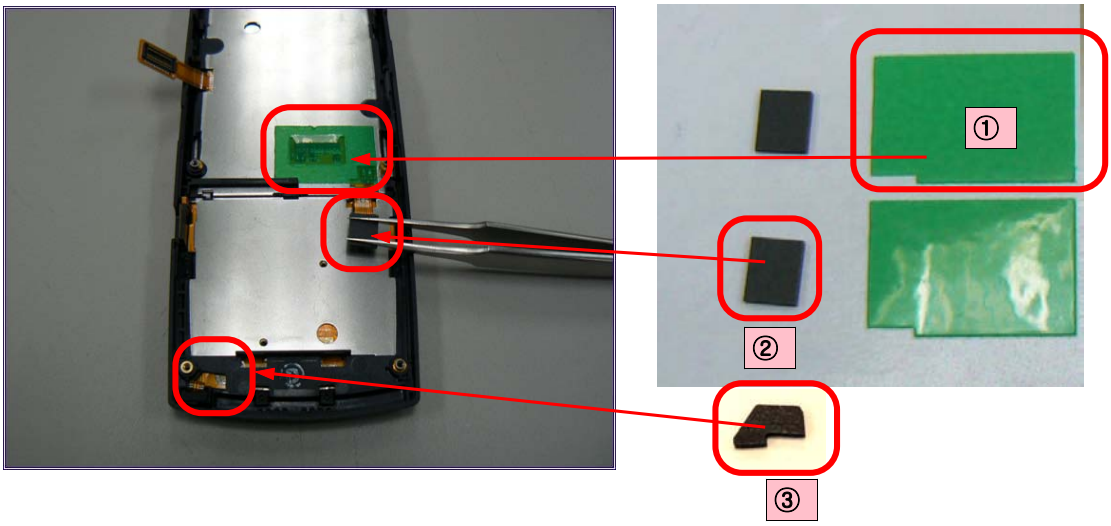

1) Attach the insulation tape on Front
2) Attach the poronon the Key PBA connector.
3) Cover the mic FPCB with the poron.

SAMSUNG Proprietary-Contents may change without notice
This Document can not be used without Samsung's authorization

14

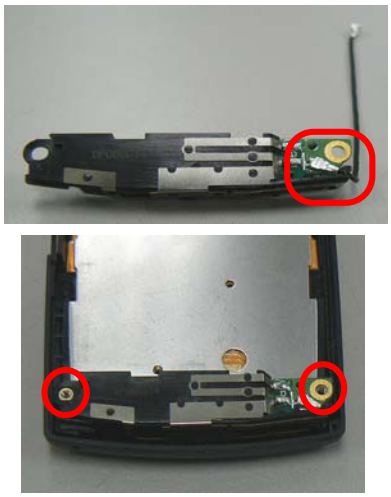

1) Connect the antenna cable with antenna.
2) Fiting two guide boss hole, push right part then left part.

※ Caution

1) The smaller connector side of antenna cable goes to antenna.

15

1) Put the antenna cable into guide path and cover the guide path with conduction tape.

16

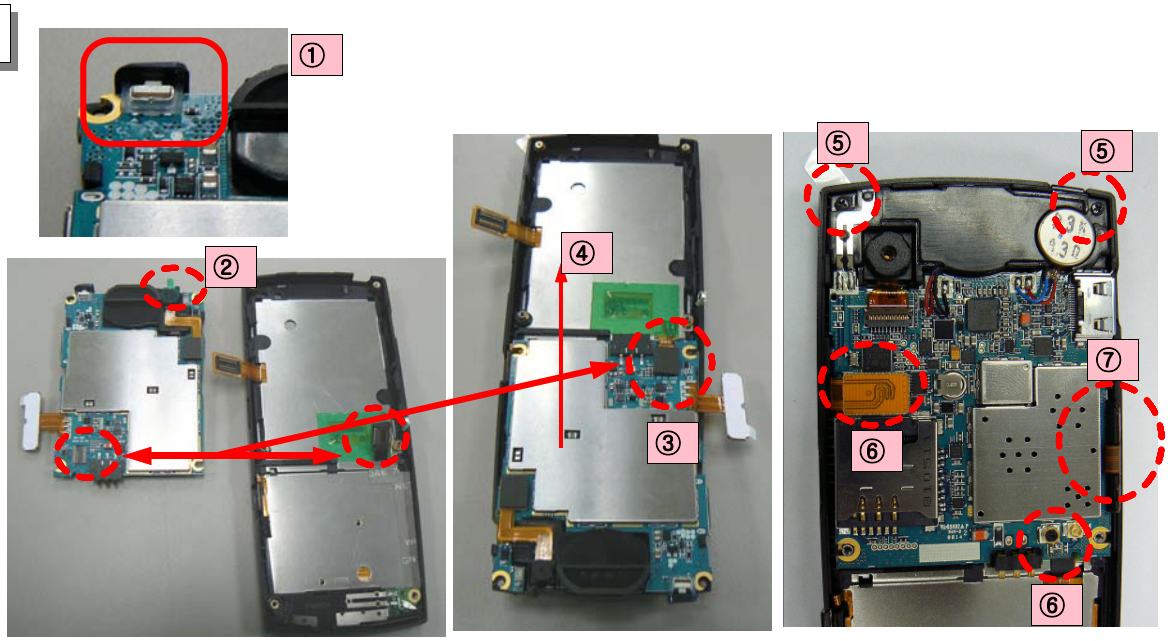

1) Place the Power key on board.
2) Take off the protection tape of Mega and CIF camera.
3) Connect the Key PBA connector.
4) Flip the board and hook the locker.
5) Screw the PBA screws.
6) Connect the LCD connector and and antenna cable.
7) Attach the volume key FPCB

SAMSUNG Proprietary-Contents may change without notice
This Document can not be used without Samsung's authorization

17

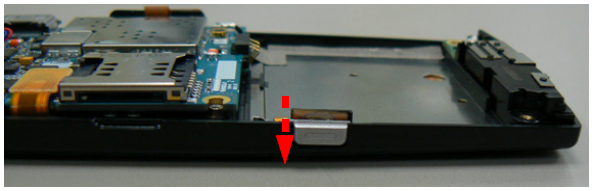

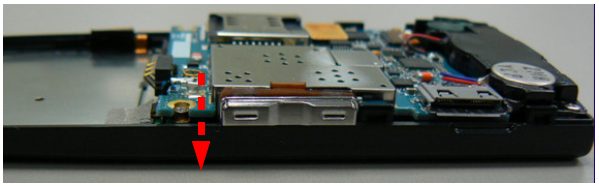

1) Place the volume key and camera key.

18

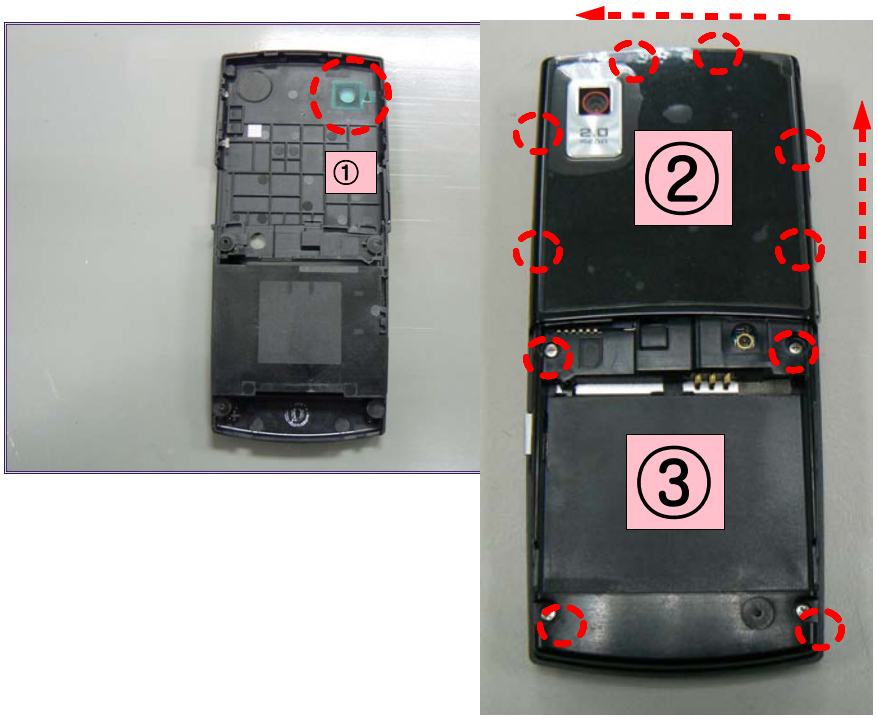

1) Take off the protection tape on REAR.
2) Assemble the Front with Rear and hook the 6 point locker in counter-clockwise.
3) Screw 4 point of the Rear.

SAMSUNG Proprietary-Contents may change without notice
This Document can not be used without Samsung's authorization

10. Chart of Troubleshooting

10-1.Baseband

10-1-1. Power ON

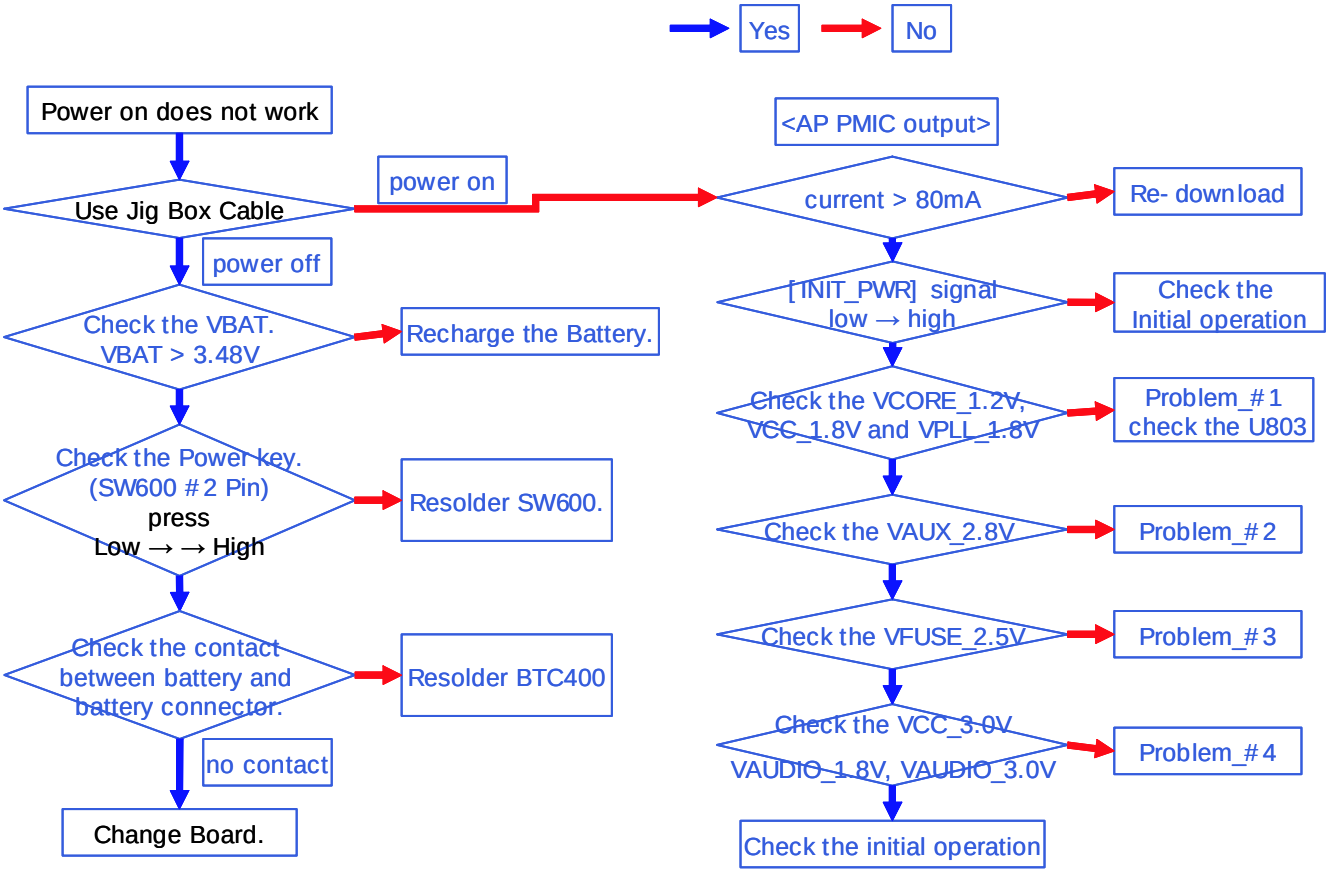

SAMSUNG Proprietary-Contents may change without notice
This Document can not be used without Samsung's authorization

Problem #1

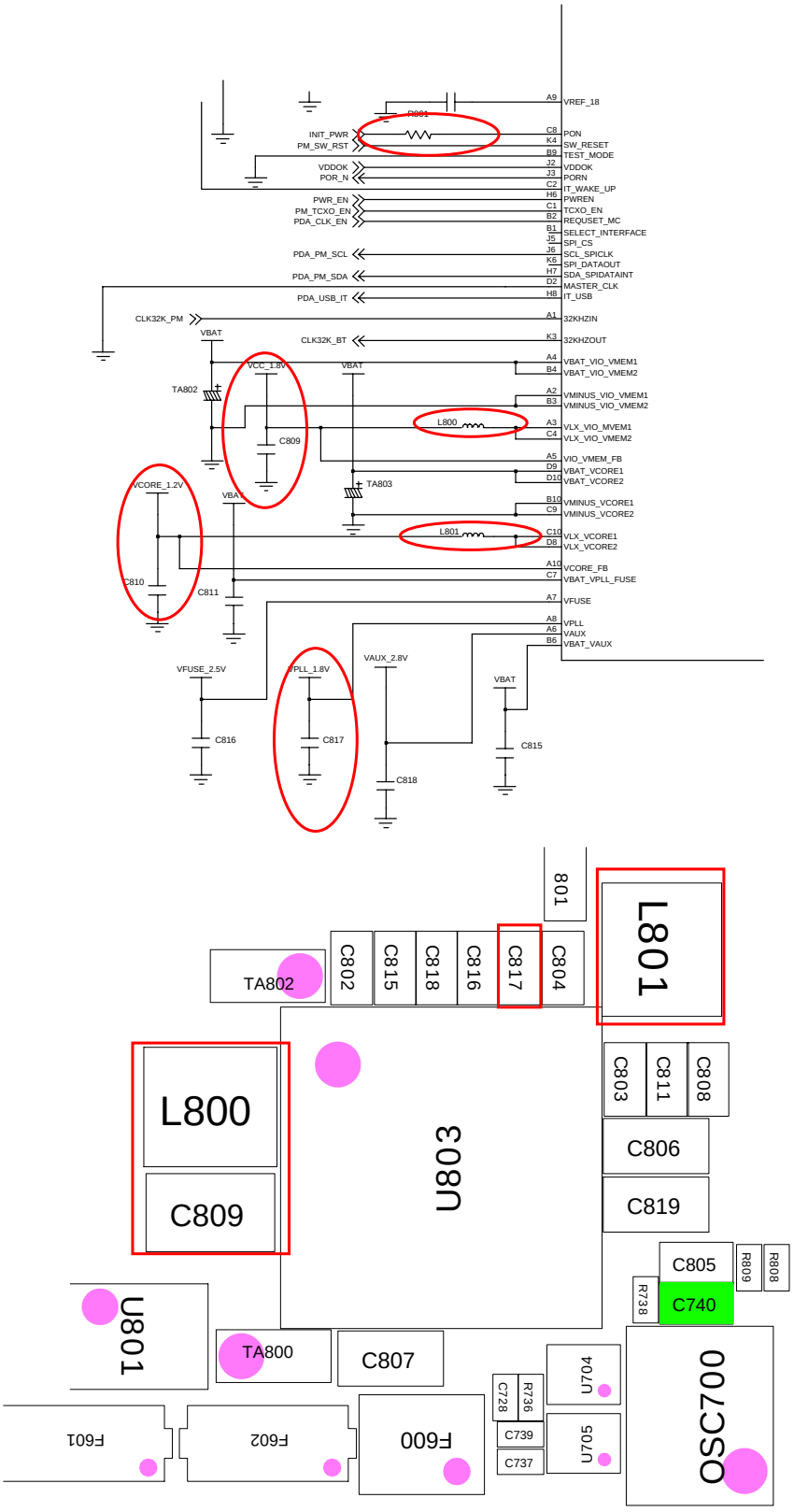

SAMSUNG Proprietary-Contents may change without notice
This Document can not be used without Samsung's authorization

Problem #2, 3

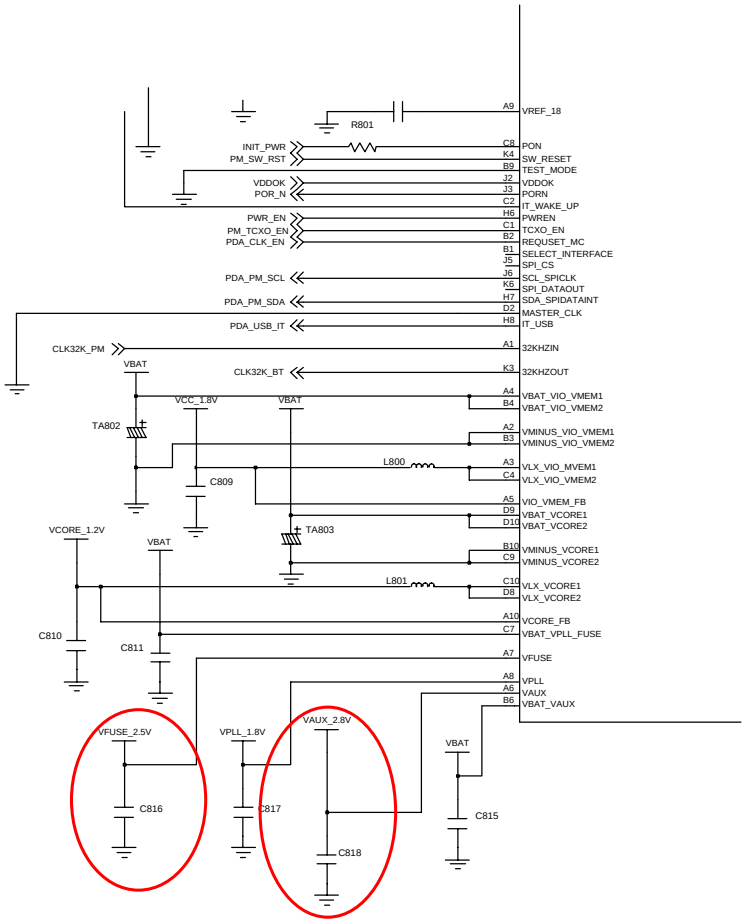

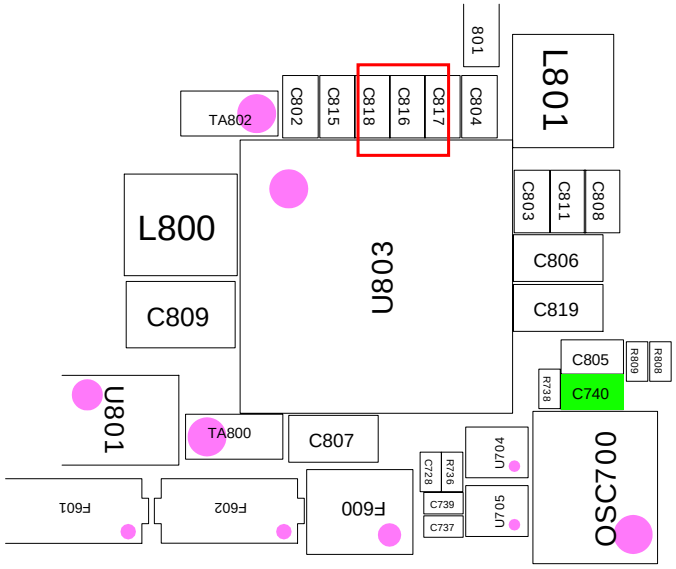

SAMSUNG Proprietary-Contents may change without notice
This Document can not be used without Samsung's authorization

Problem #4

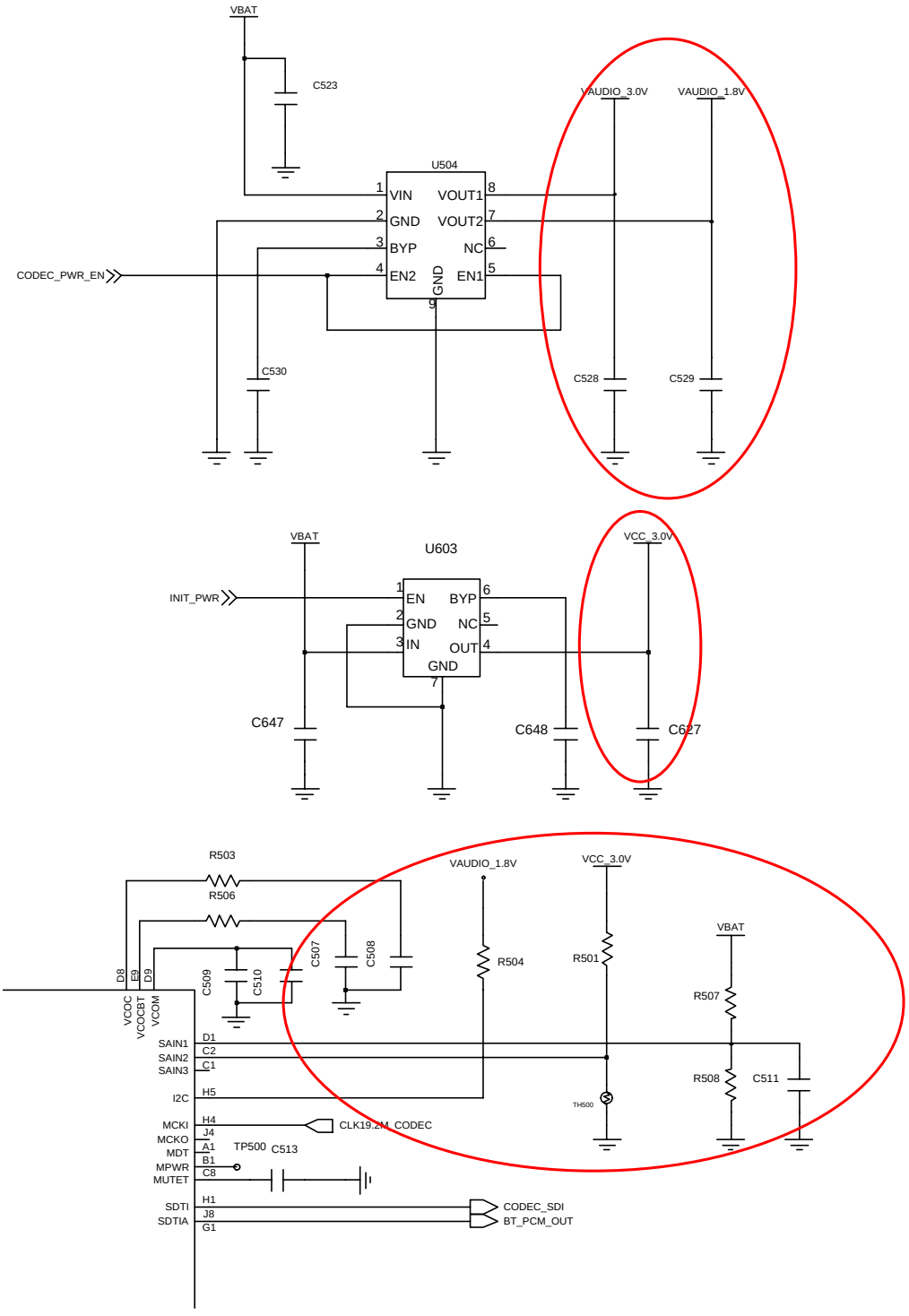

SAMSUNG Proprietary-Contents may change without notice
This Document can not be used without Samsung's authorization

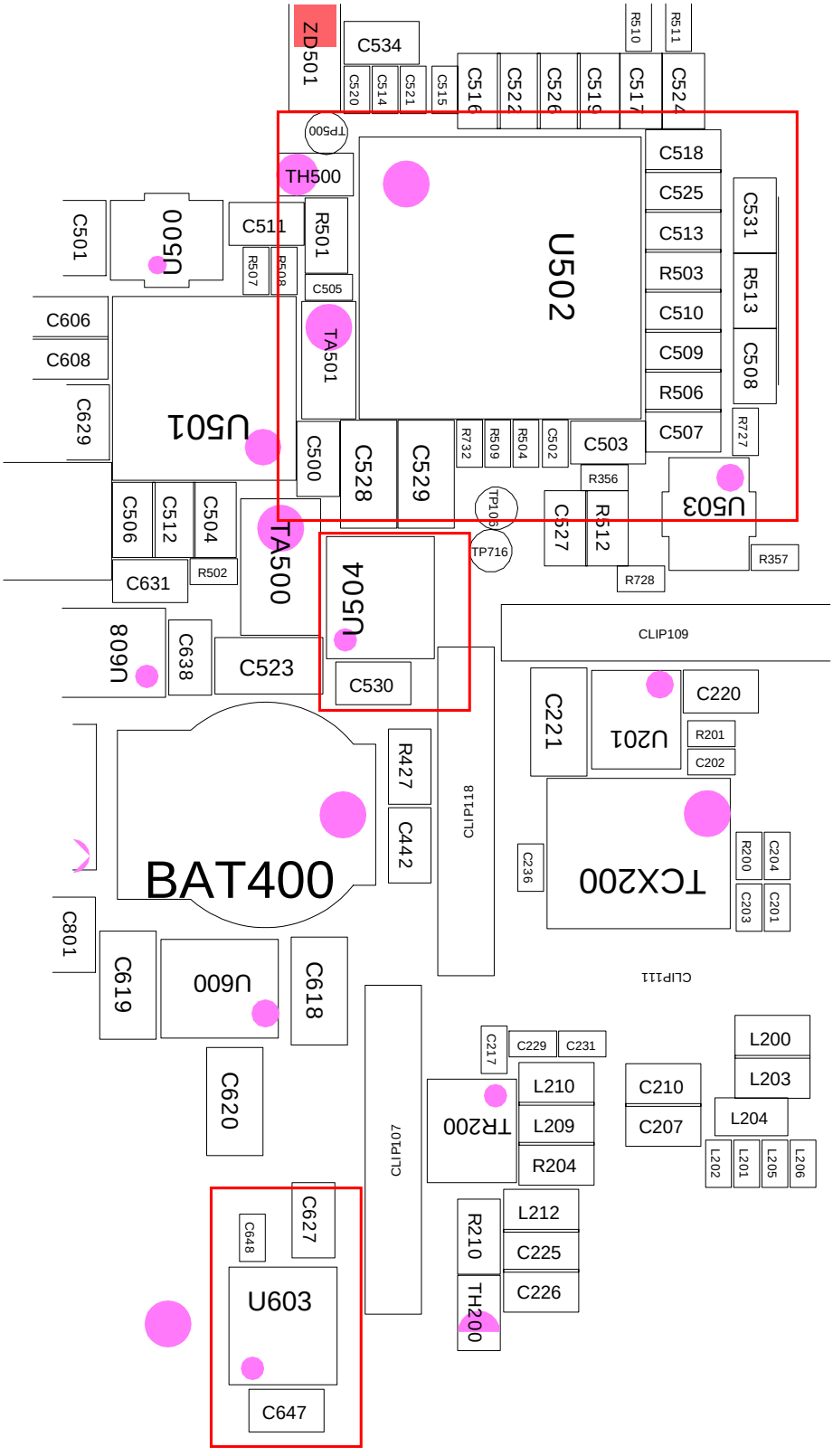

SAMSUNG Proprietary-Contents may change without notice
This Document can not be used without Samsung's authorization

10-1-2. System Initial

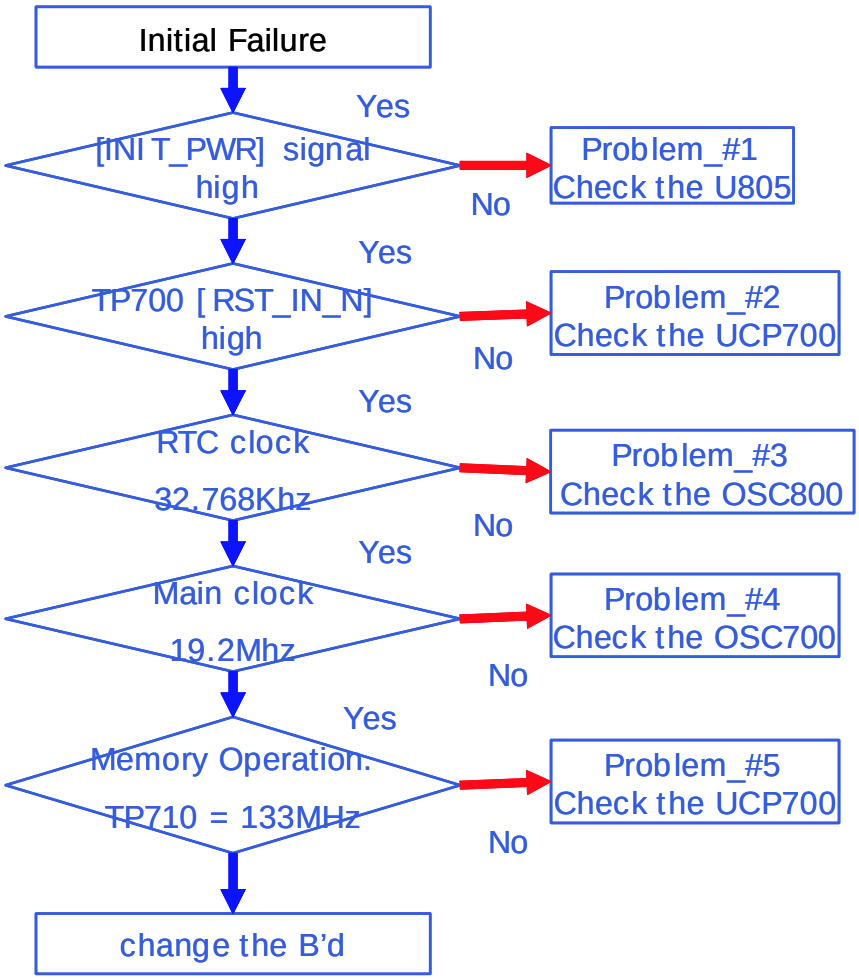

SAMSUNG Proprietary-Contents may change without notice
This Document can not be used without Samsung's authorization

Problem #1

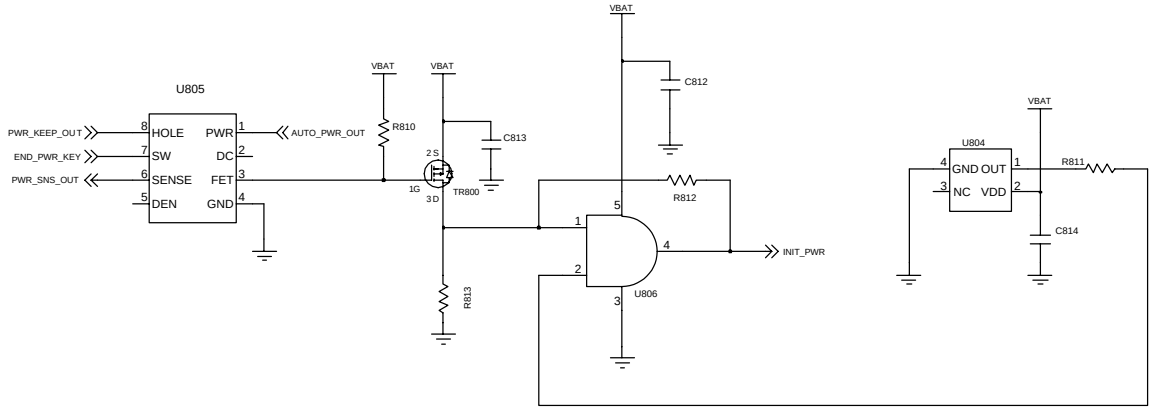

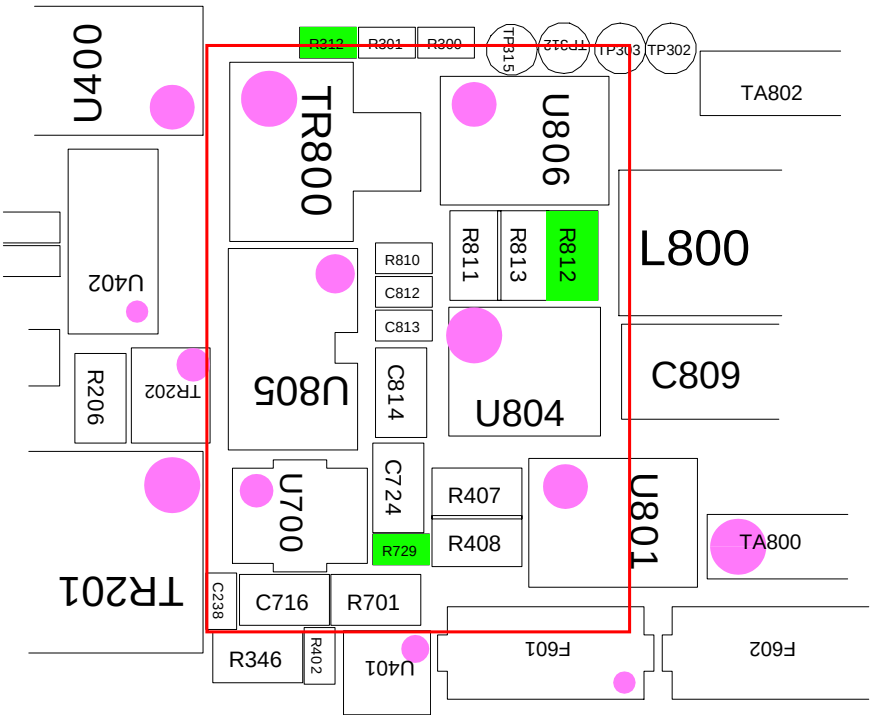

SAMSUNG Proprietary-Contents may change without notice
This Document can not be used without Samsung's authorization

Problem #2

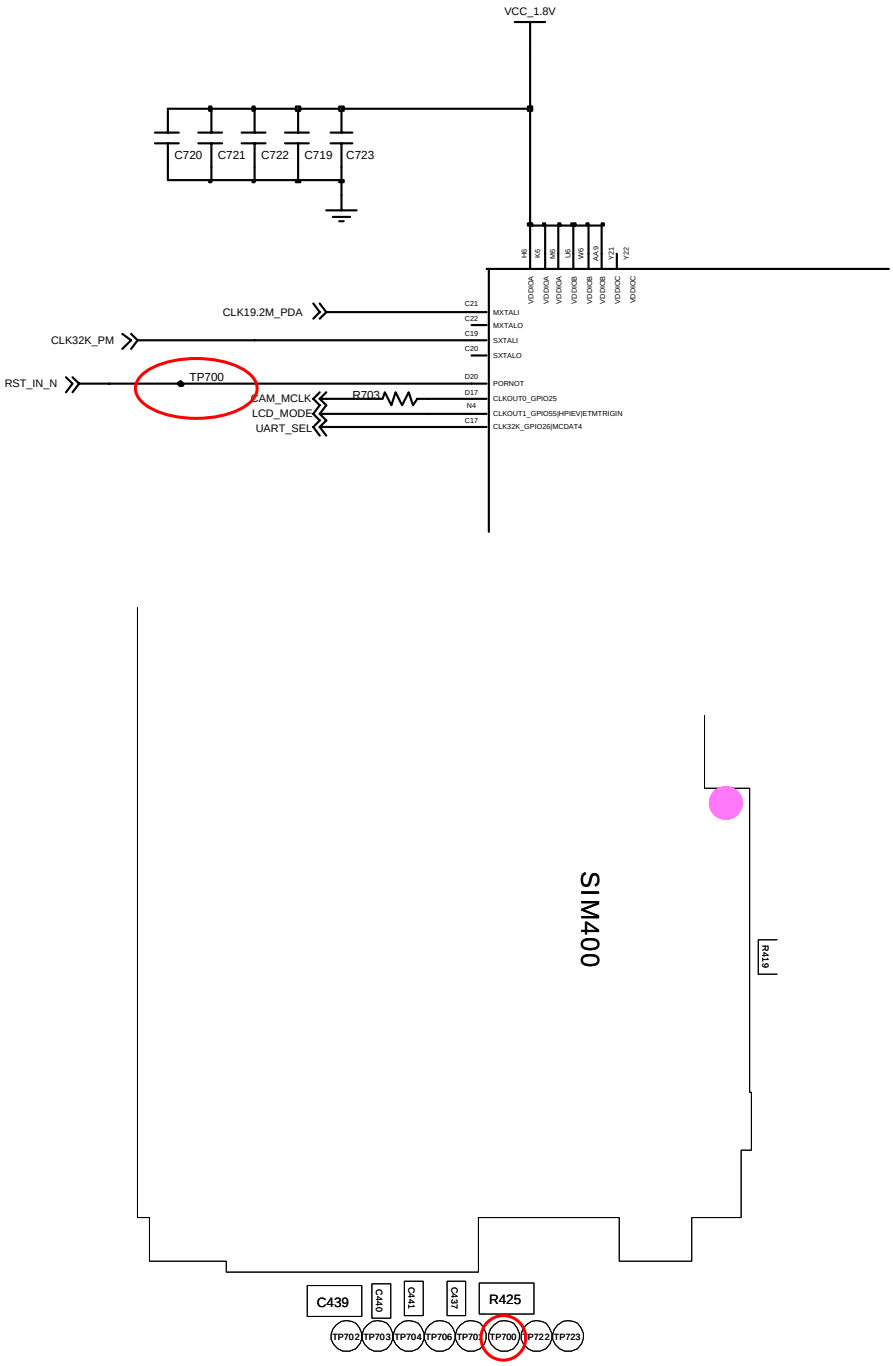

SAMSUNG Proprietary-Contents may change without notice
This Document can not be used without Samsung's authorization

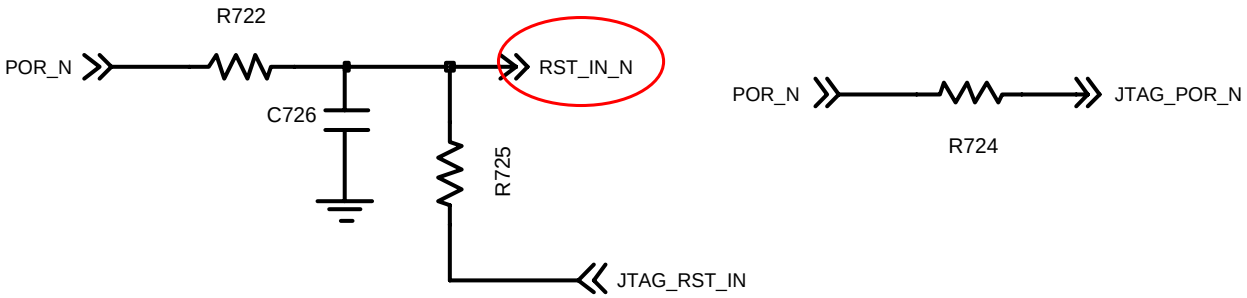

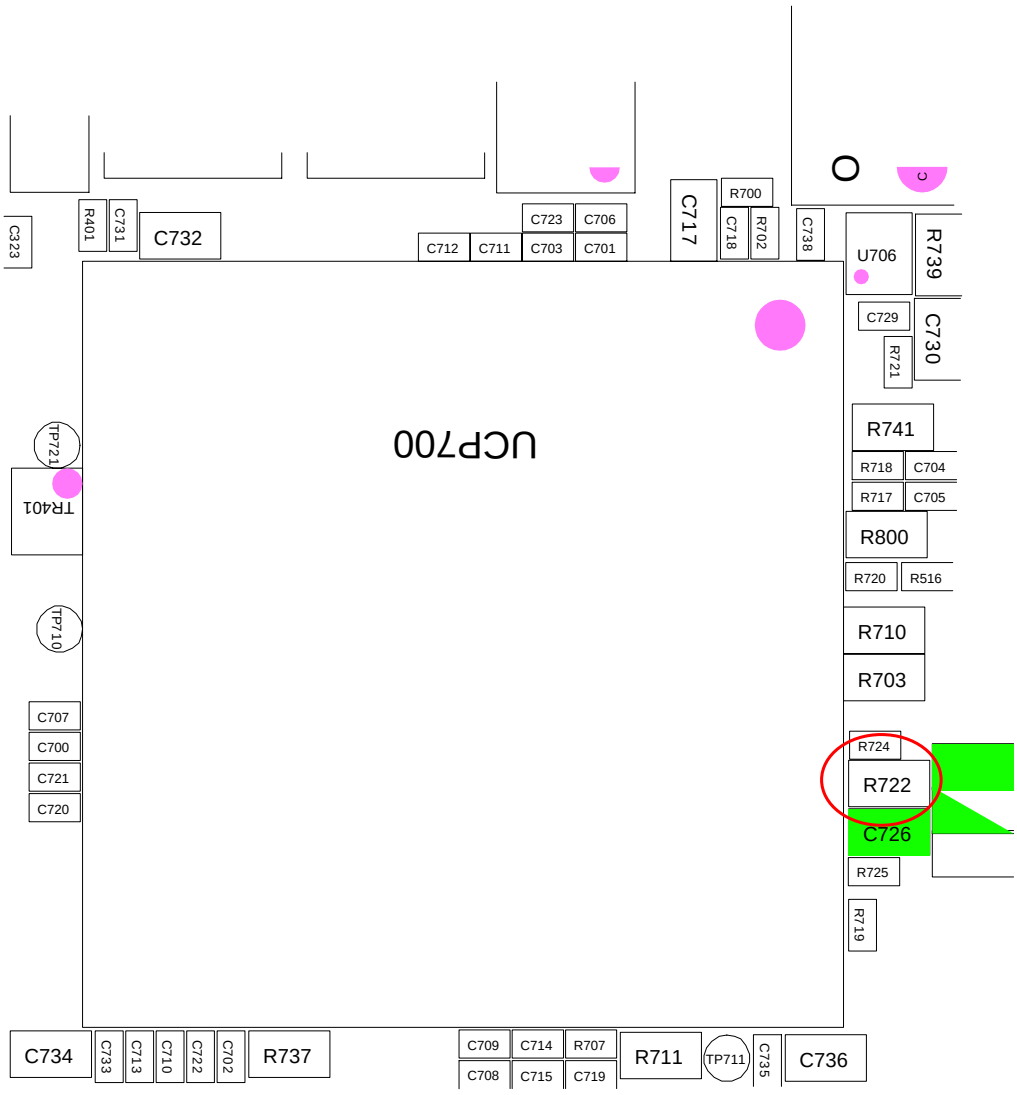

SAMSUNG Proprietary-Contents may change without notice
This Document can not be used without Samsung's authorization

Problem #3, 4

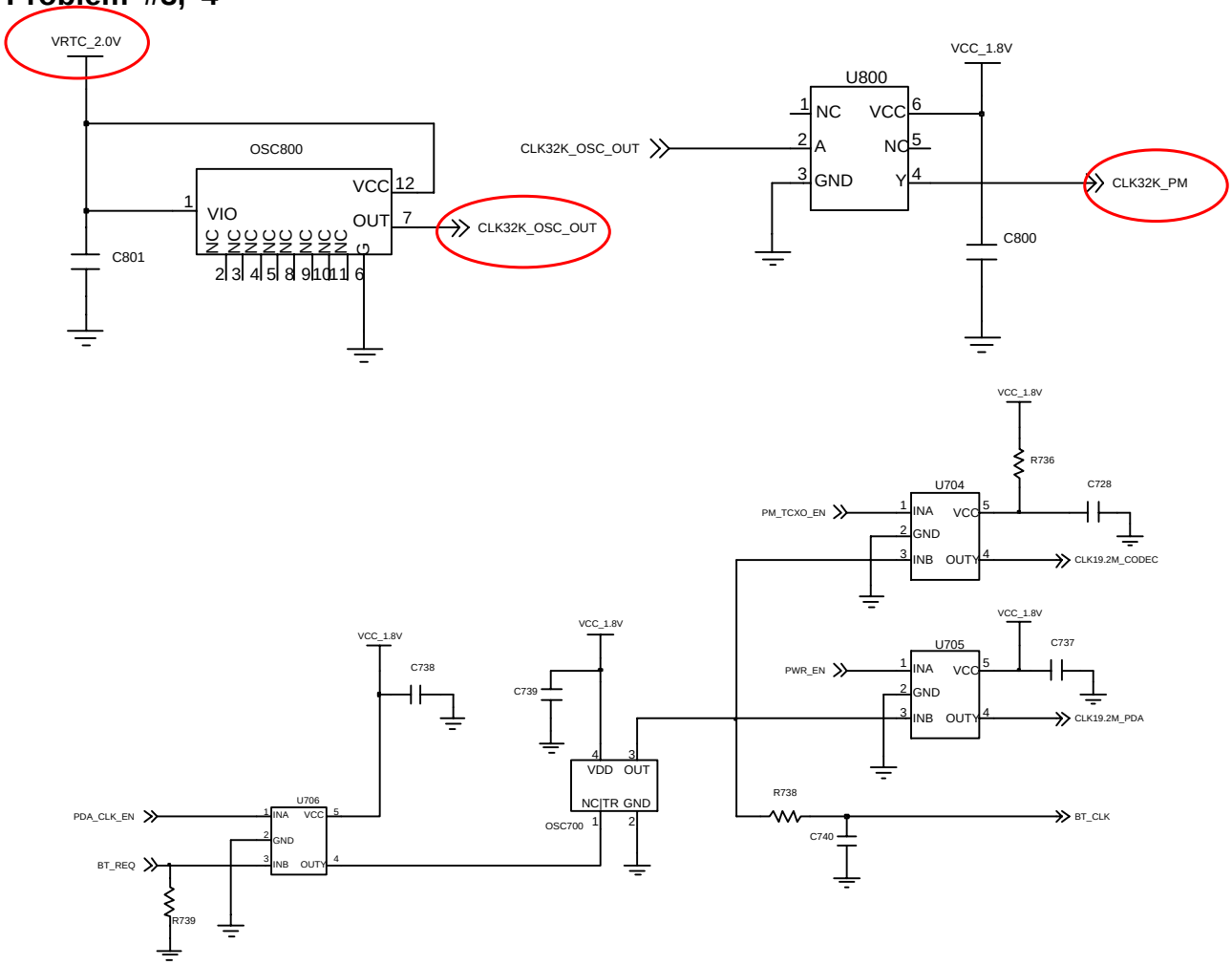

Problem #5

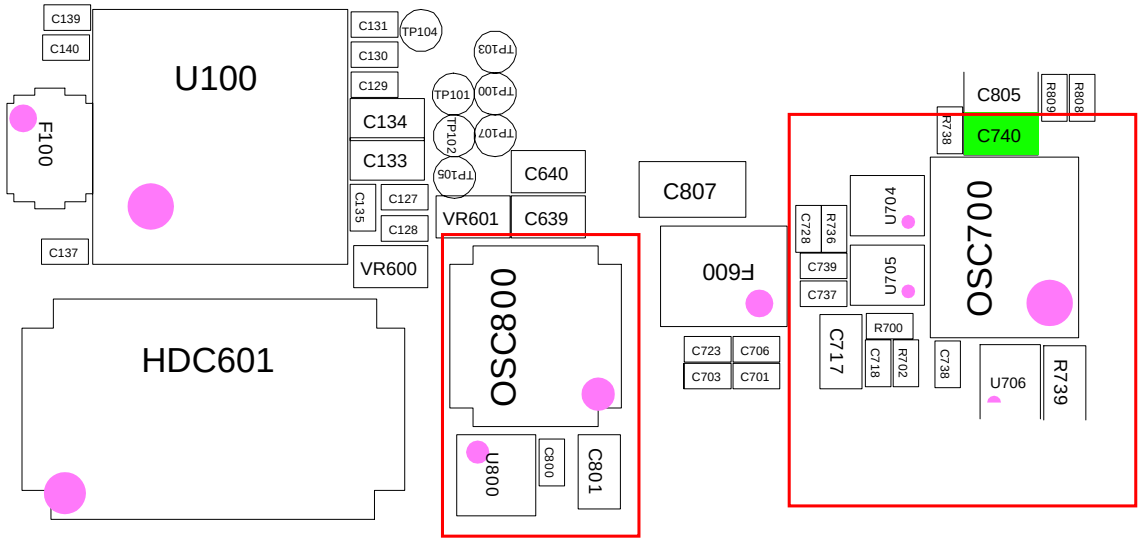

SAMSUNG Proprietary-Contents may change without notice
This Document can not be used without Samsung's authorization

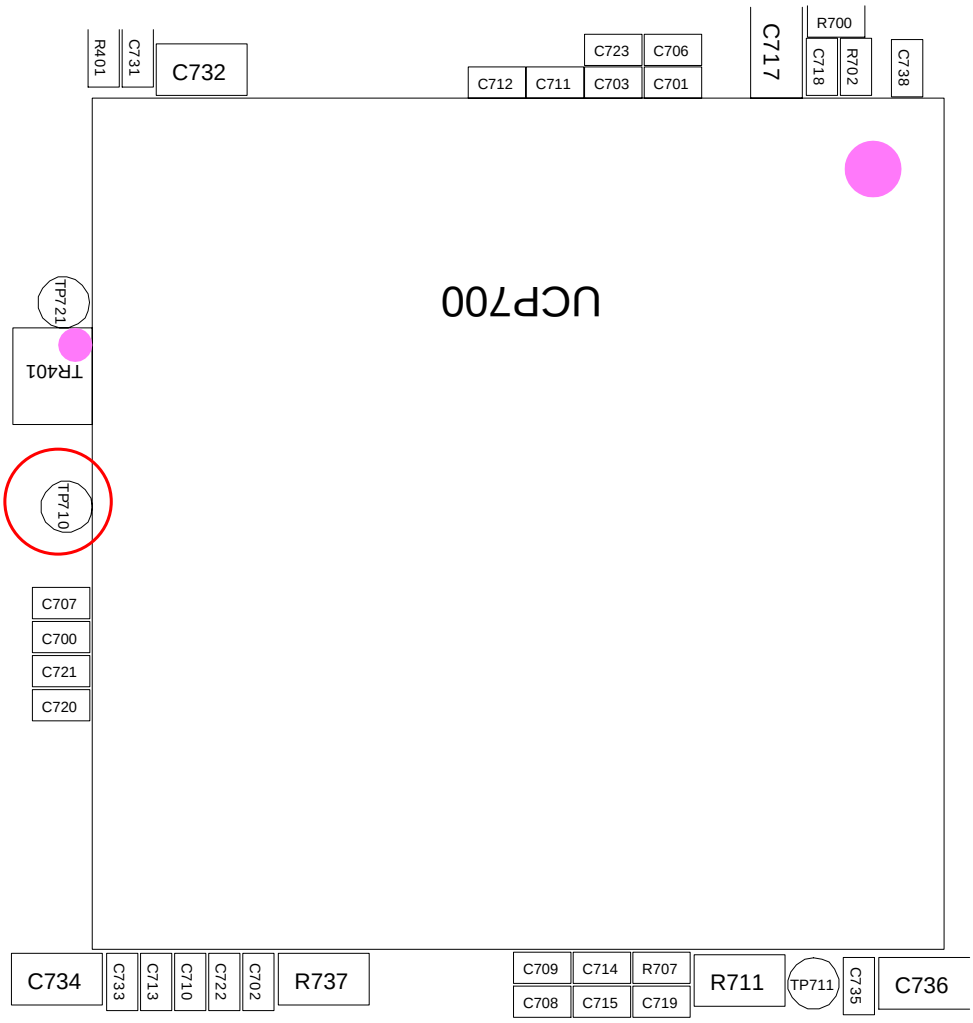

SAMSUNG Proprietary-Contents may change without notice
This Document can not be used without Samsung's authorization

10-1-3. Sim Part

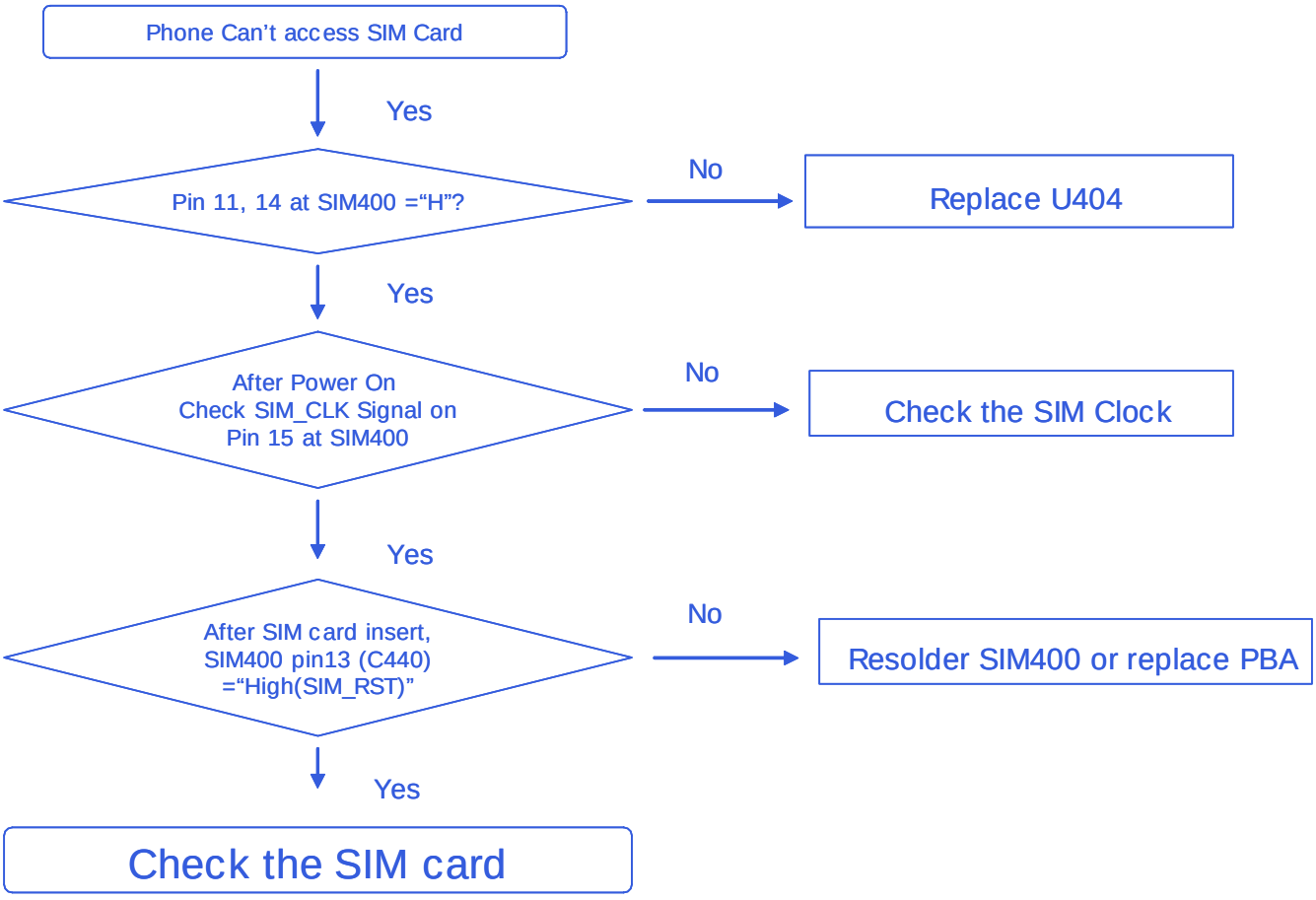

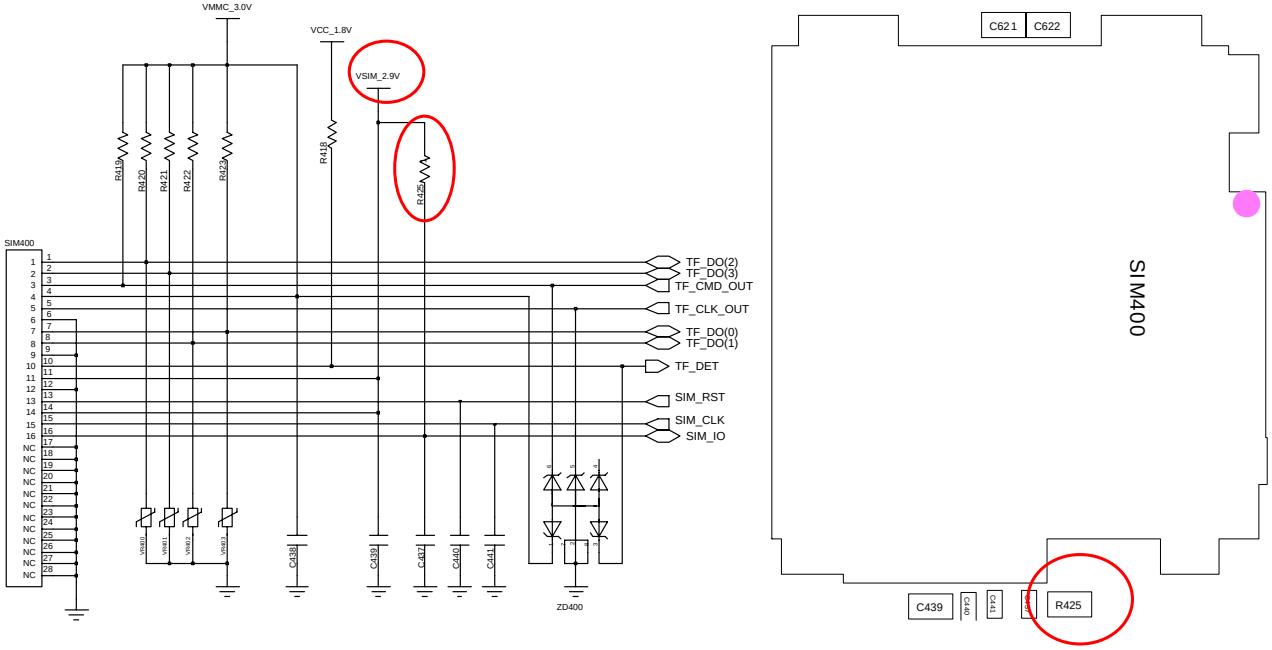

SAMSUNG Proprietary-Contents may change without notice
This Document can not be used without Samsung's authorization

10-1-4. Charging Part

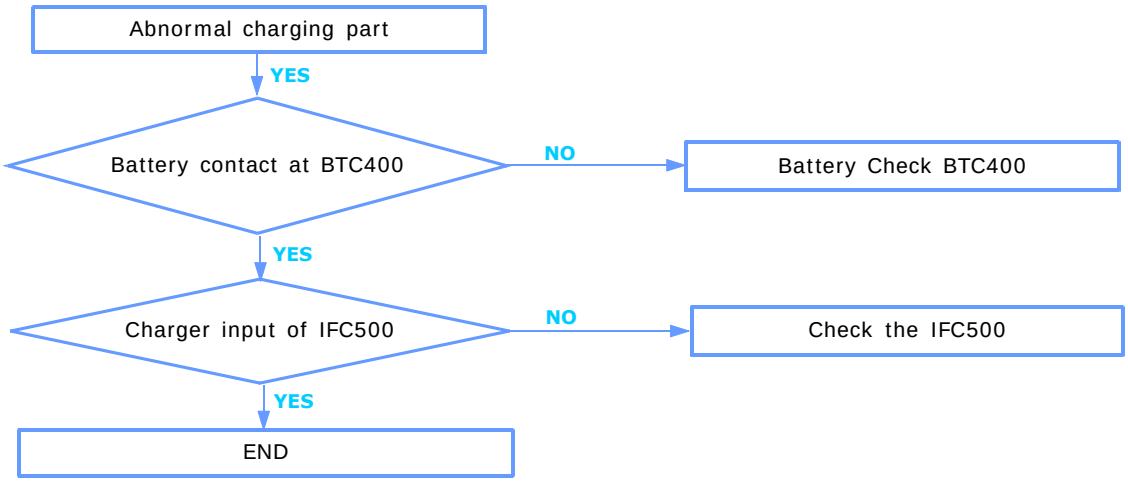

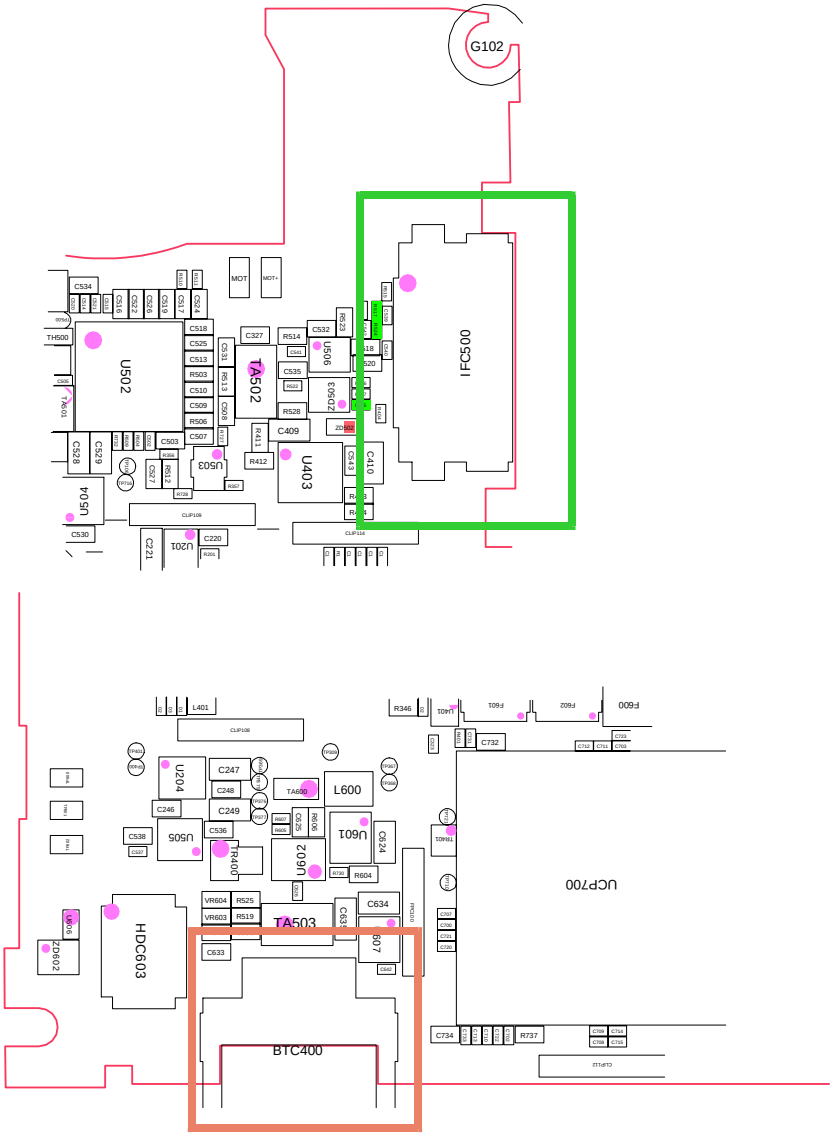

SAMSUNG Proprietary-Contents may change without notice
This Document can not be used without Samsung's authorization

10-1-5. Microphone Part

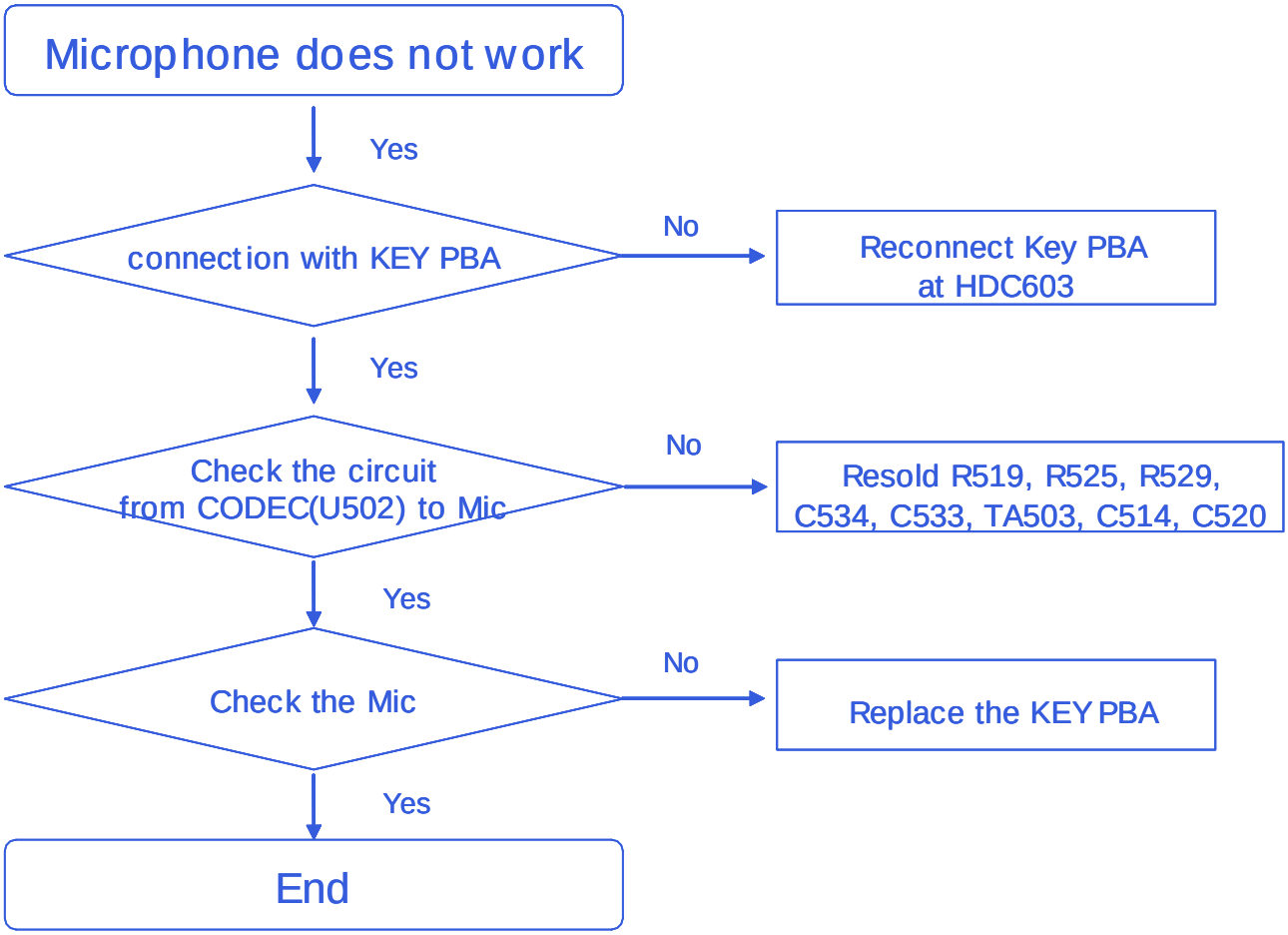

SAMSUNG Proprietary-Contents may change without notice
This Document can not be used without Samsung's authorization

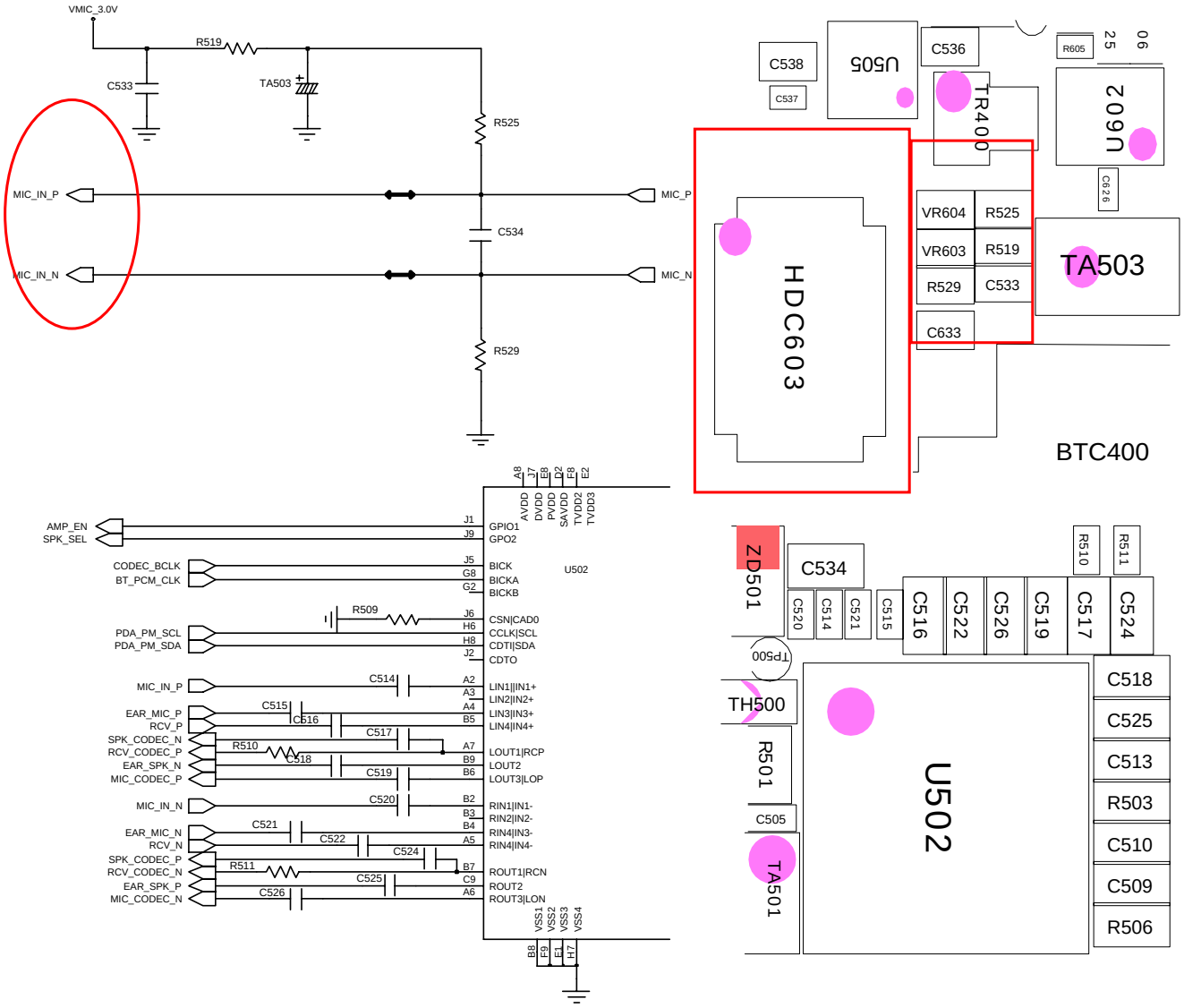

SAMSUNG Proprietary-Contents may change without notice
This Document can not be used without Samsung's authorization

10-1-6. Receiver Part

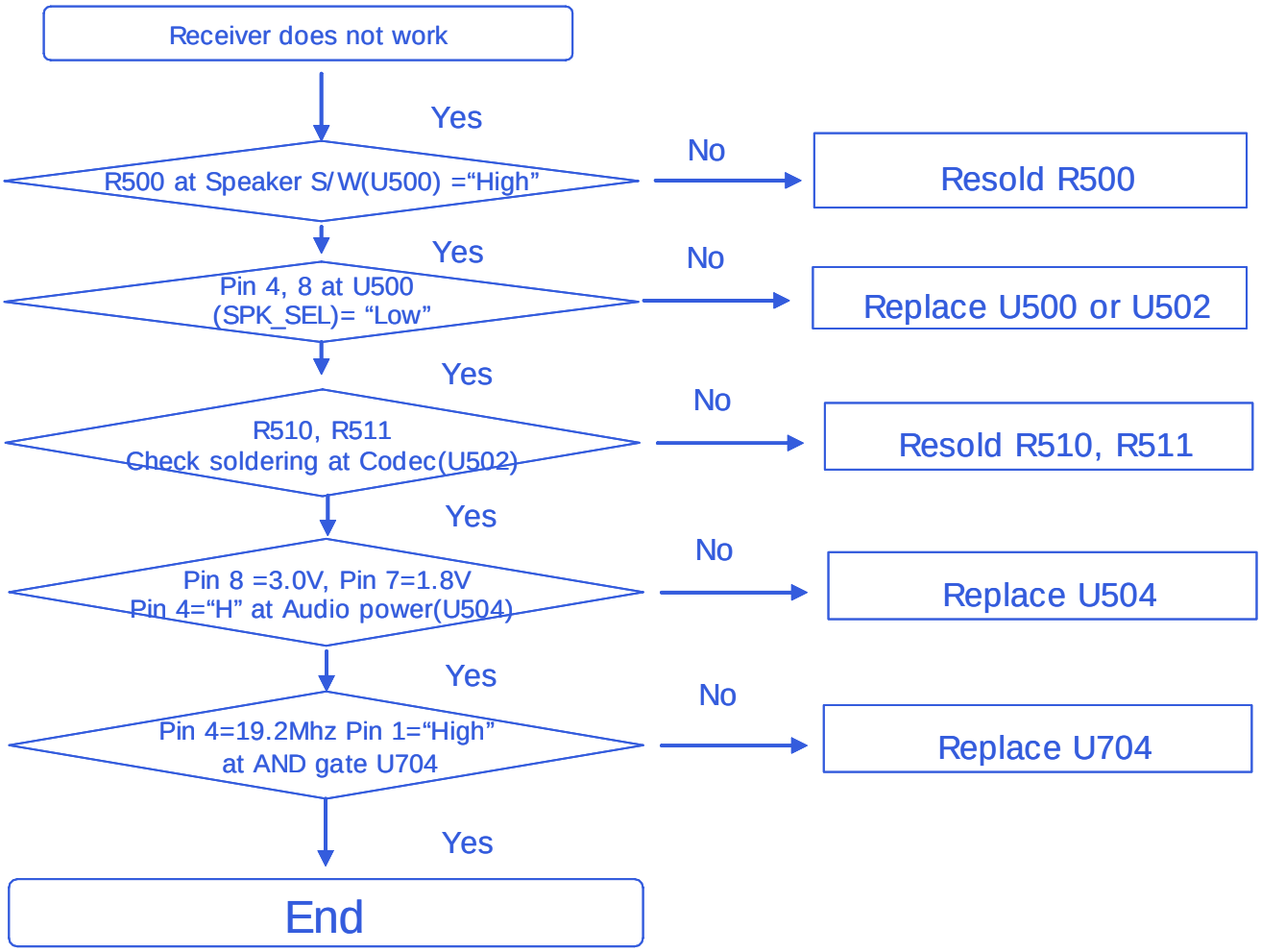

SAMSUNG Proprietary-Contents may change without notice
This Document can not be used without Samsung's authorization

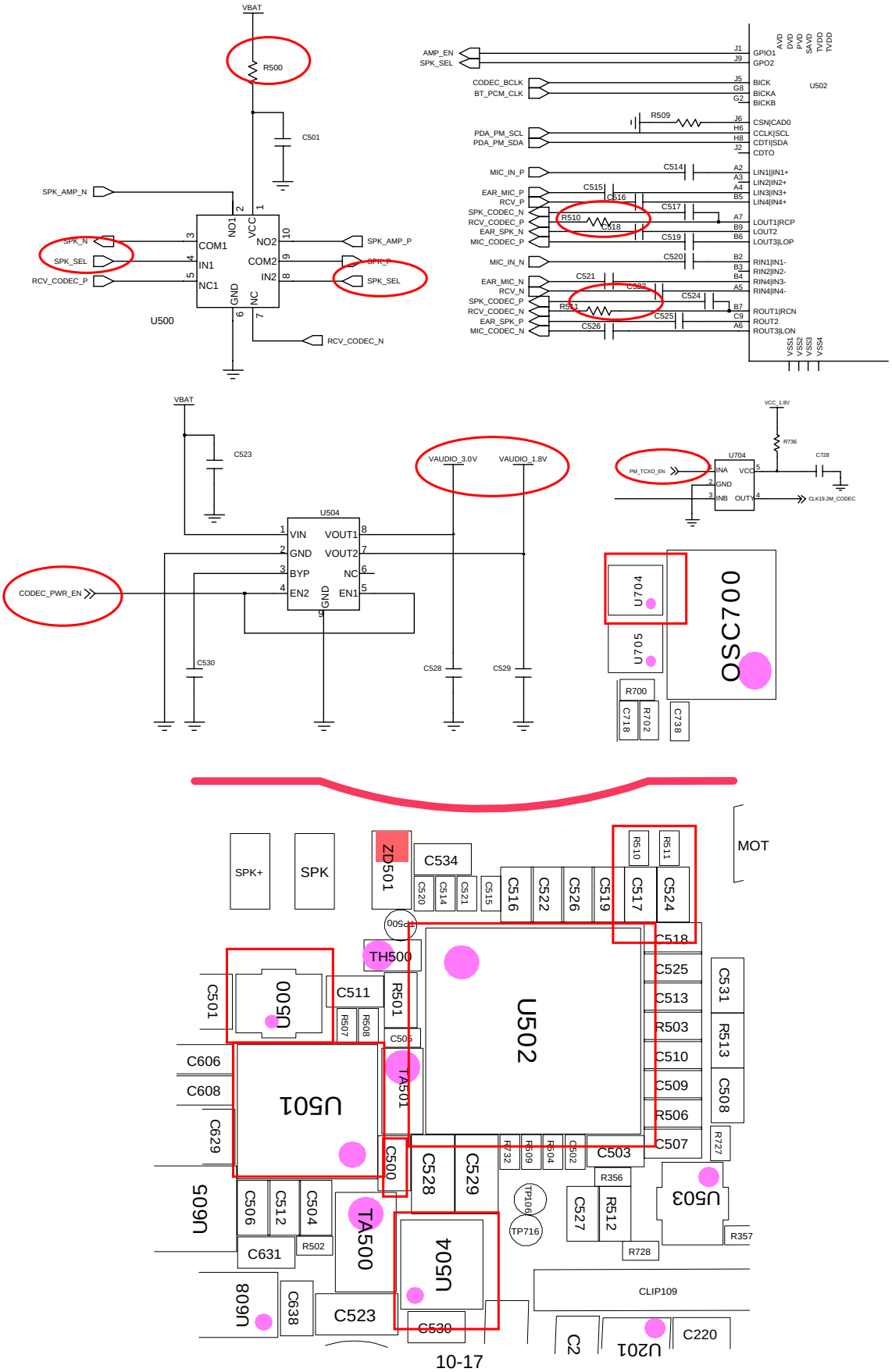

SAMSUNG Proprietary-Contents may change without notice
This Document can not be used without Samsung's authorization

10-1-7. Speaker Part

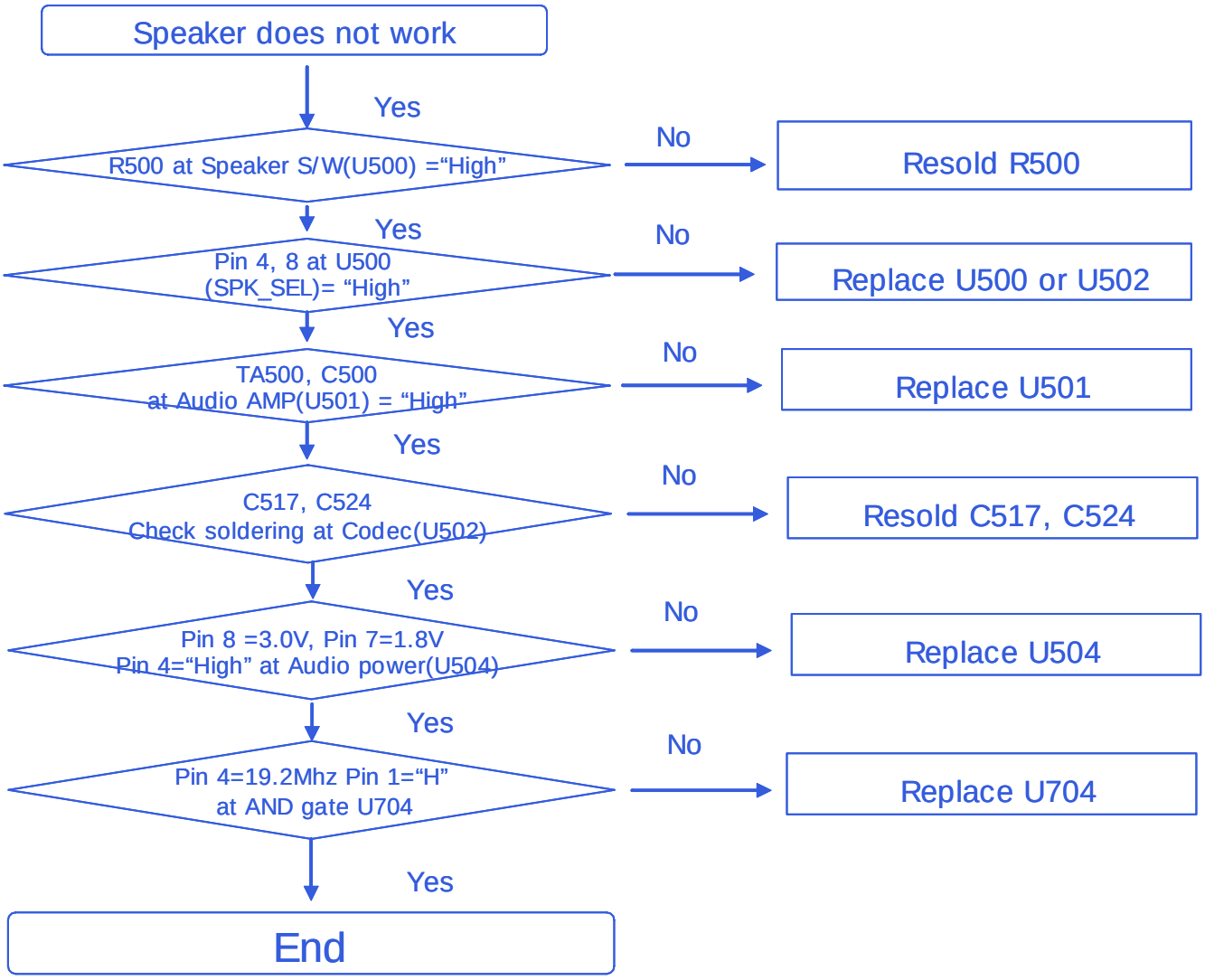

SAMSUNG Proprietary-Contents may change without notice
This Document can not be used without Samsung's authorization

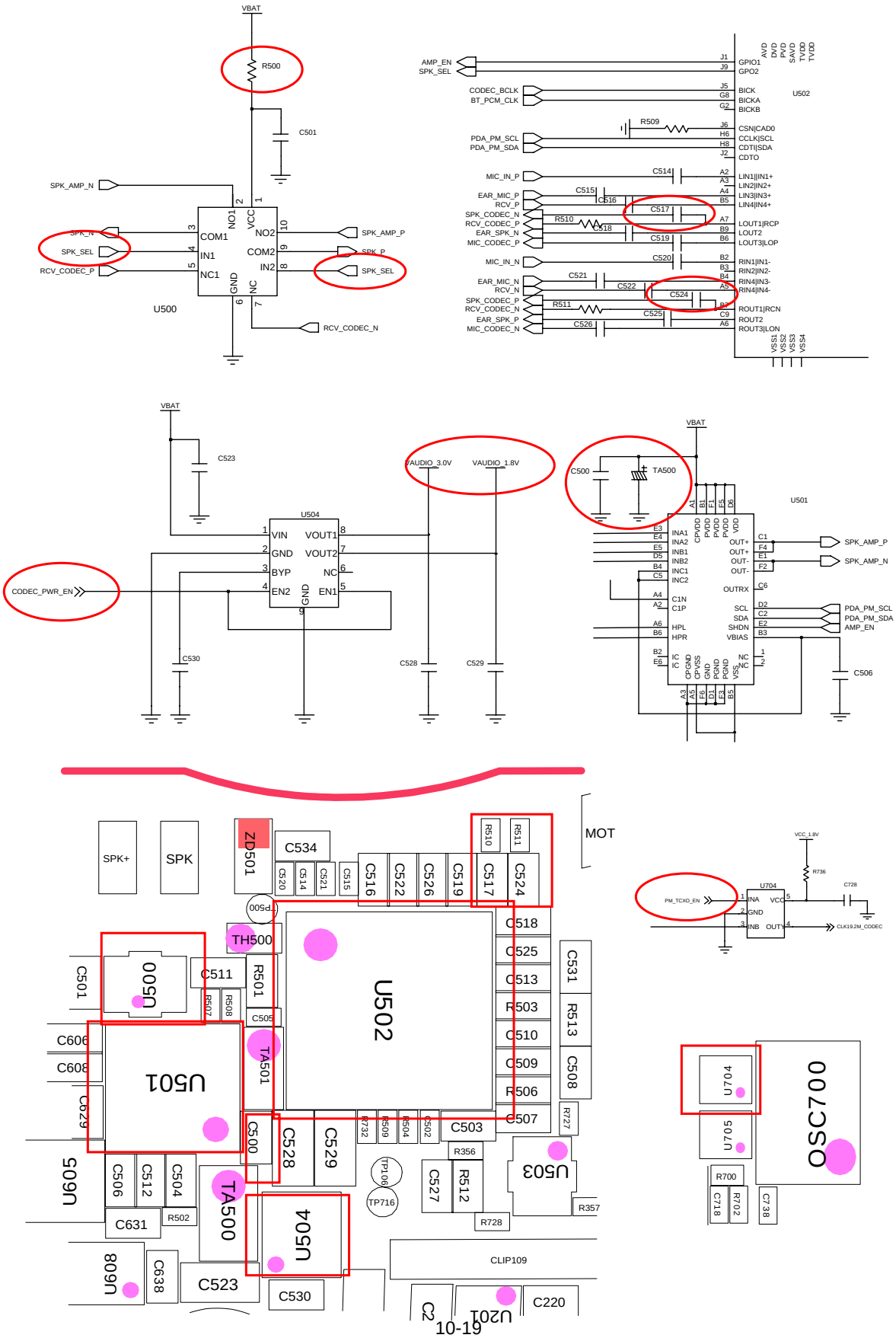
VBAT
R500
C501
SPK_AMP_N
SPK_N
SPK_SEL
RCV_CODEC_P
COM1
IN1
NC1
NO2
COM2
IN2
SPK_AMP_P
SPK_P
SPK_SEL
U500
RCV_CODEC_N
AMP_EN
SPK_SEL
CODEC_BCLK
BT_PCM_CLK
PDA_PM_SCL
PDA_PM_SDA
MIC_IN_P
EAR_MIC_P
RCV_P
SPK_CODEC_N
RCV_CODEC_P
EAR_SPK_N
MIC_CODEC_P
MIC_IN_N
EAR_MIC_N
RCV_N
SPK_CODEC_P
RCV_CODEC_N
EAR_SPK_P
MIC_CODEC_N
U502
C523
VAUDIO_3.0V
VAUDIO_1.8V
U504
VIN
GND
BYP
EN2
VOUT1
VOUT2
NC
EN1
CODEC_PWR_EN
C530
C528
C529
C500
TA500
U501
SPK_AMP_P
SPK_AMP_N
PDA_PM_SCL
PDA_PM_SDA
AMP_EN
C506
SPK+
SPK
ZD501
C534
TH500
U500
C511
R501
U502
C501
C606
C608
C629
U501
TA501
C500
C528
C529
C503
U503
C506
C512
C504
R502
C631
TA500
U504
U605
U609
C638
C523
C530
CLIP109
C220
U201
MOT
U704
OSC700
R700
C718
R702
C738
10-19

10-1-8. Camera Part

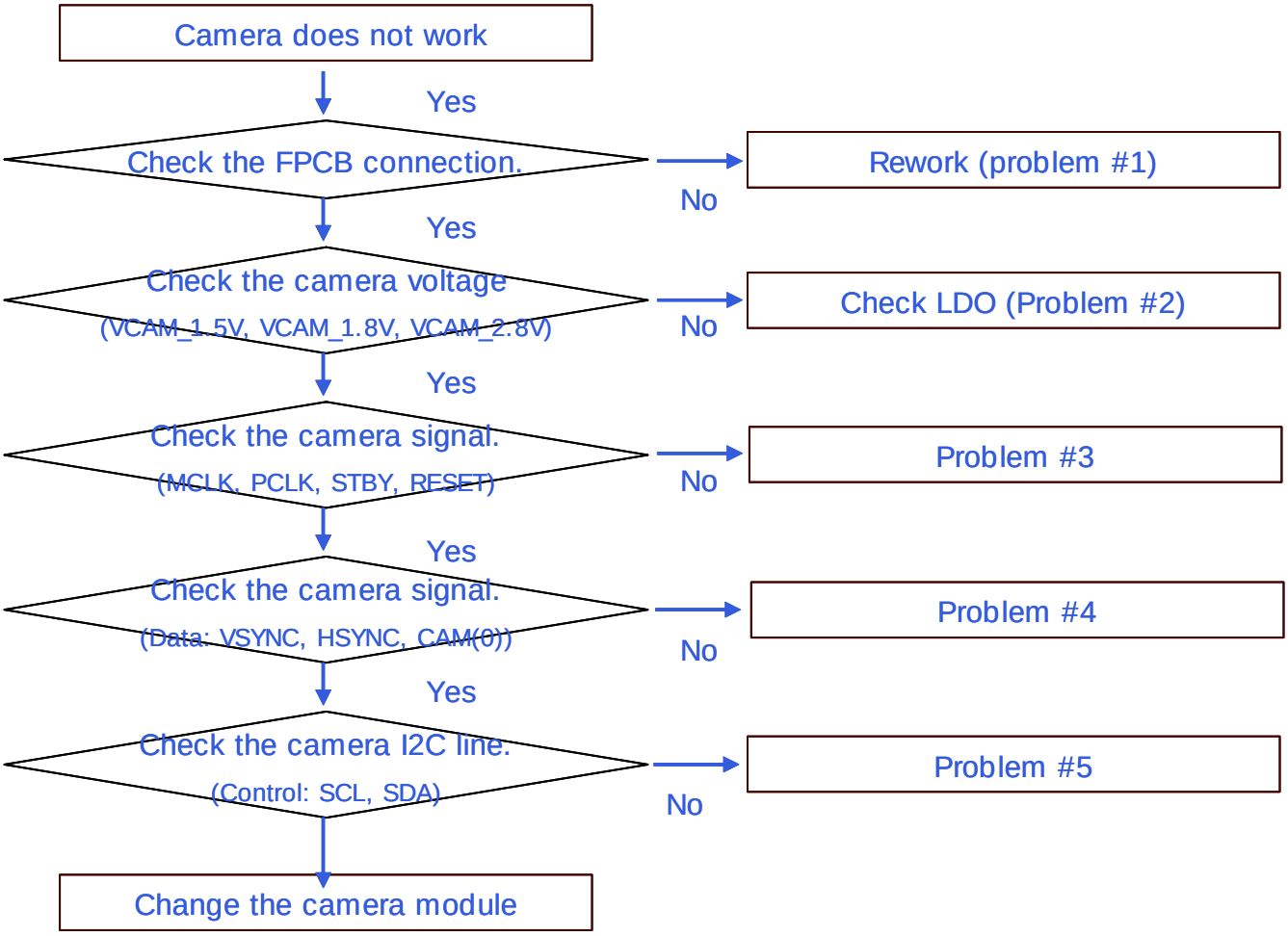

SAMSUNG Proprietary-Contents may change without notice
This Document can not be used without Samsung's authorization

Problem #1

Check the FPCB connection.

(camera module, slide FPCB, Connector HDC600)

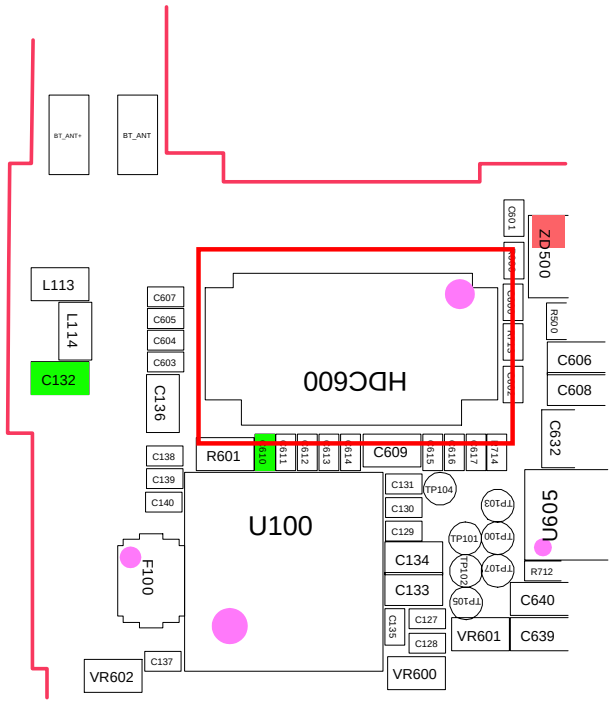

Problem #2

Check the Camera Voltage Sources.

(VCAM_1.5V, VCAM_1.8V[U608] / VCAM_2.8V[U605])

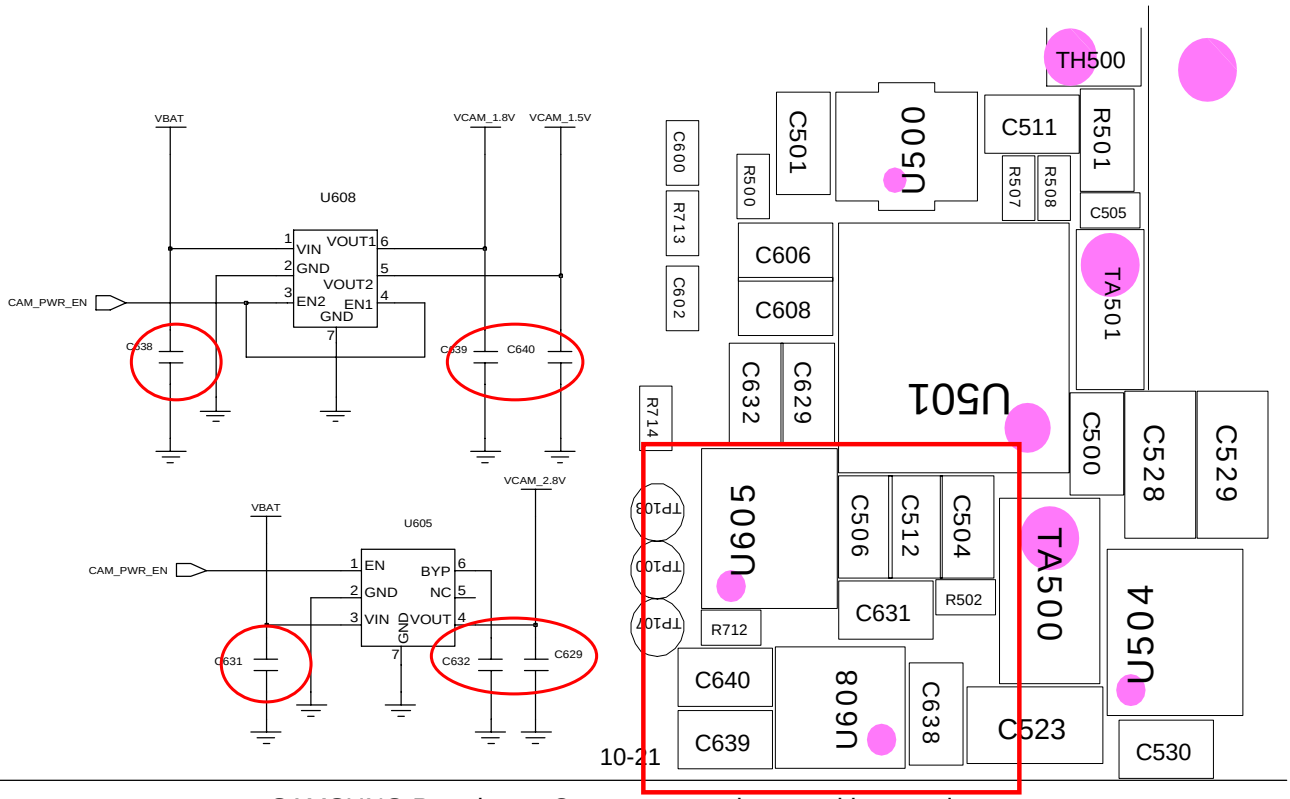

SAMSUNG Proprietary-Contents may change without notice
This Document can not be used without Samsung's authorization

Problem #3

	2M CAM		CIF CAM	
	Point	State	Point	State
MCLK	C601	48Mhz	C601	9Mhz
PCLK	R601	48Mhz	R601	4.5Mhz
STBY	HDC600_#19	L→ H	HDC602_#5	L→ H
RESET	C615	L→ H	HDC602_#22	L→ H

Problem #4

Check the Camera Signal
VSYNC : C602
HSYNC : C616
CAM_D(0) : C607

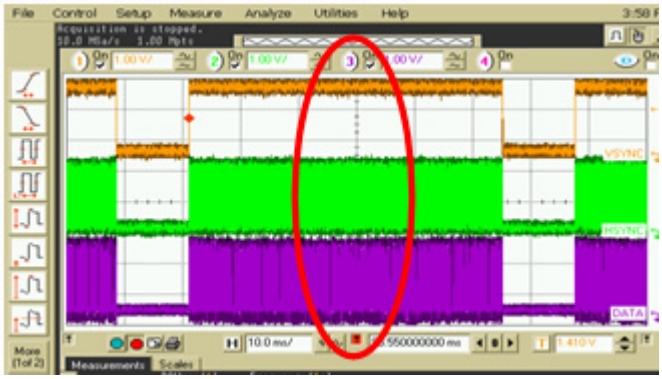

Problem #5

Check the Camera Signal
CAM_MEGA_SCL : R714
CAM_MEGA_SDA : R713

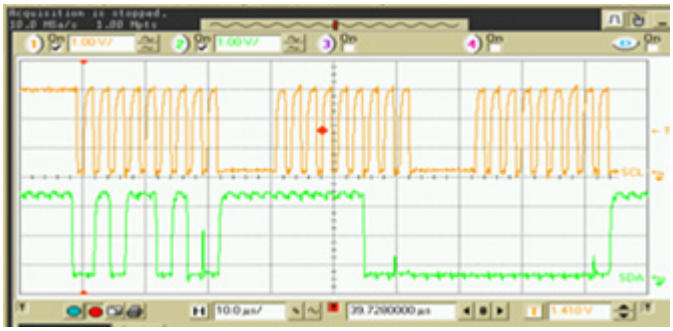

SAMSUNG Proprietary-Contents may change without notice
This Document can not be used without Samsung's authorization

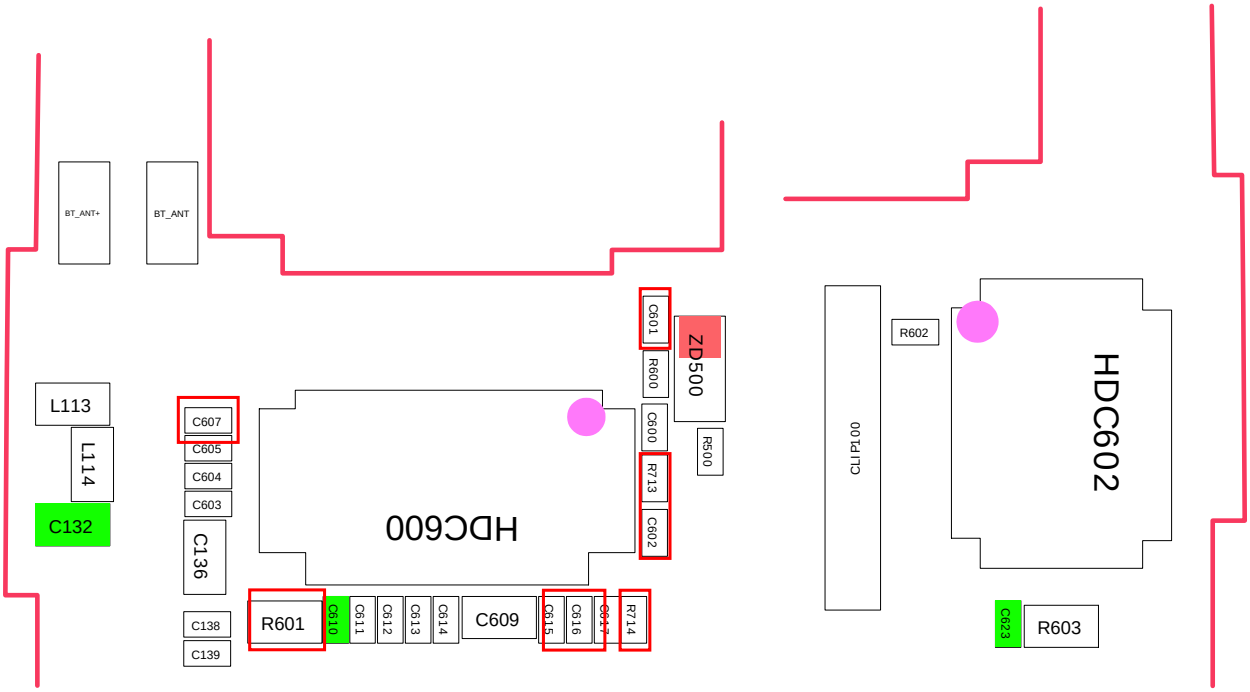

SAMSUNG Proprietary-Contents may change without notice
This Document can not be used without Samsung's authorization

10-1-9. LCD

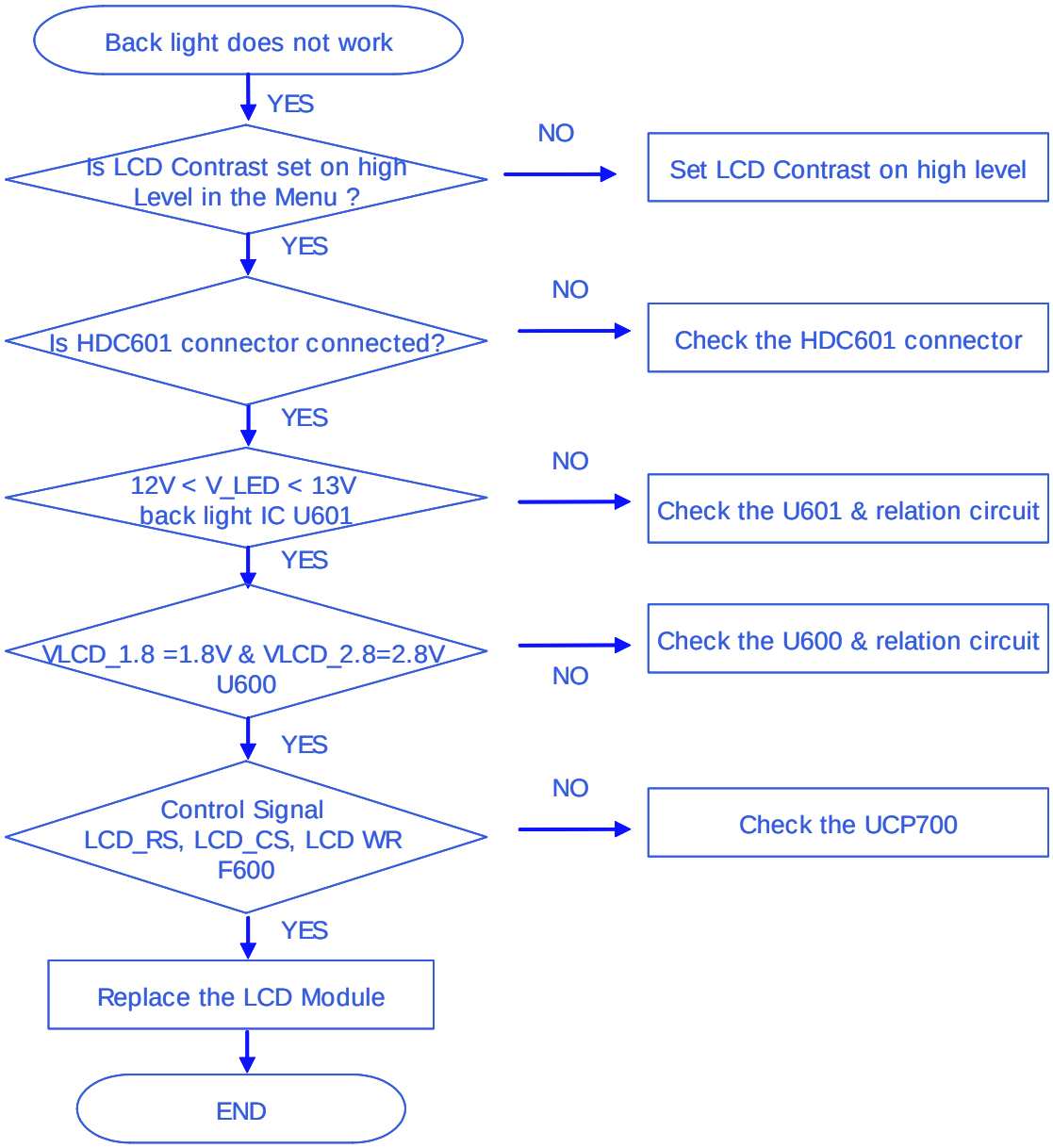

SAMSUNG Proprietary-Contents may change without notice
This Document can not be used without Samsung's authorization

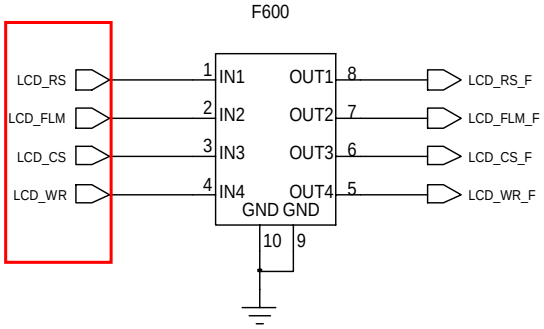

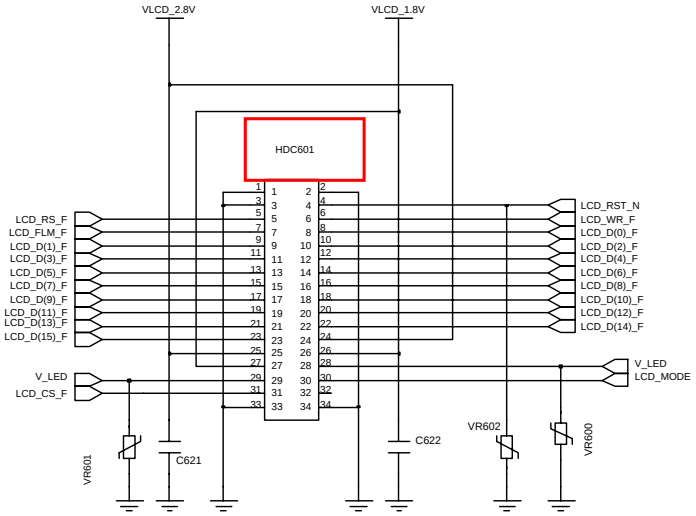

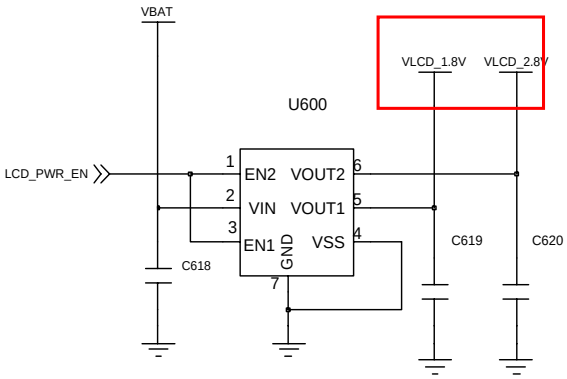

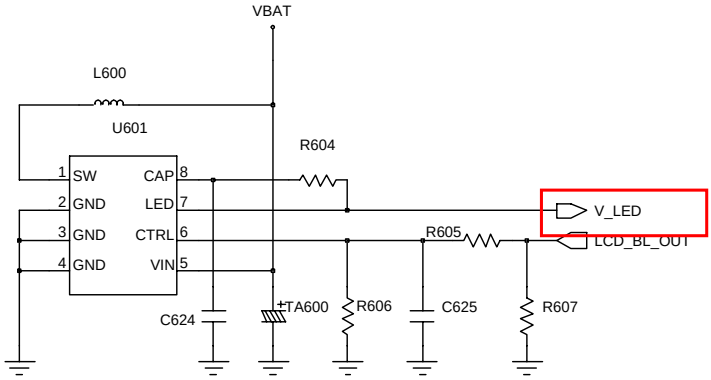

SAMSUNG Proprietary-Contents may change without notice
This Document can not be used without Samsung's authorization

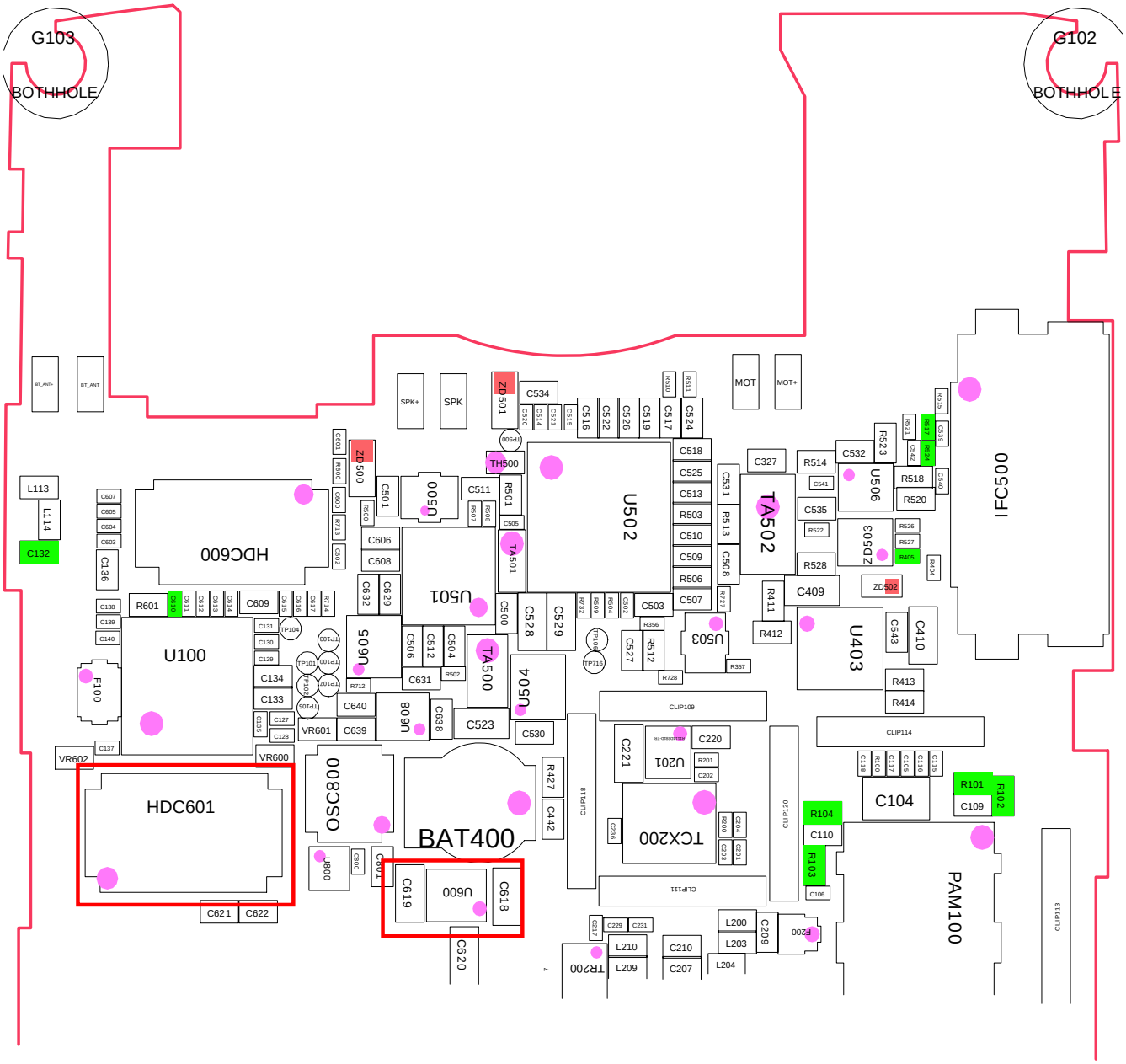

SAMSUNG Proprietary-Contents may change without notice
This Document can not be used without Samsung's authorization

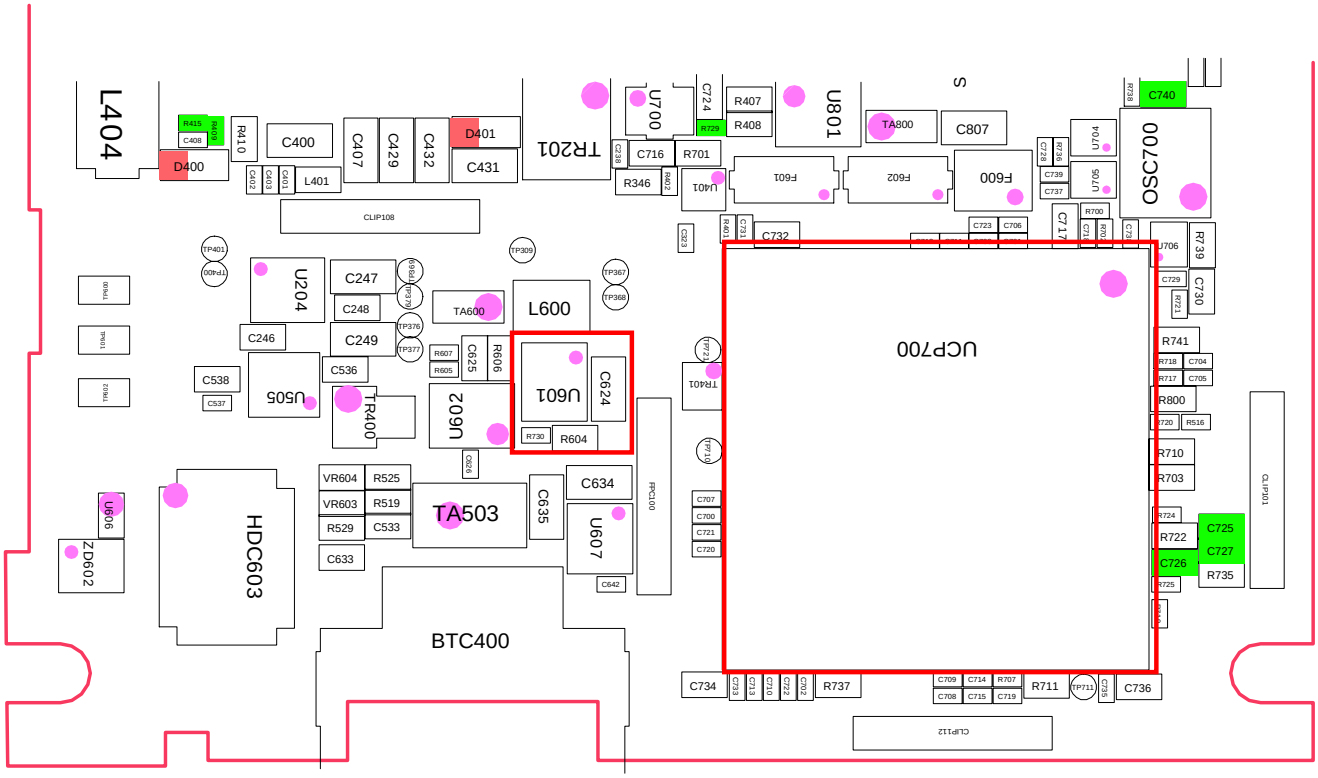

SAMSUNG Proprietary-Contents may change without notice
This Document can not be used without Samsung's authorization

10-2.RF
10-2-1. EGSM Rx

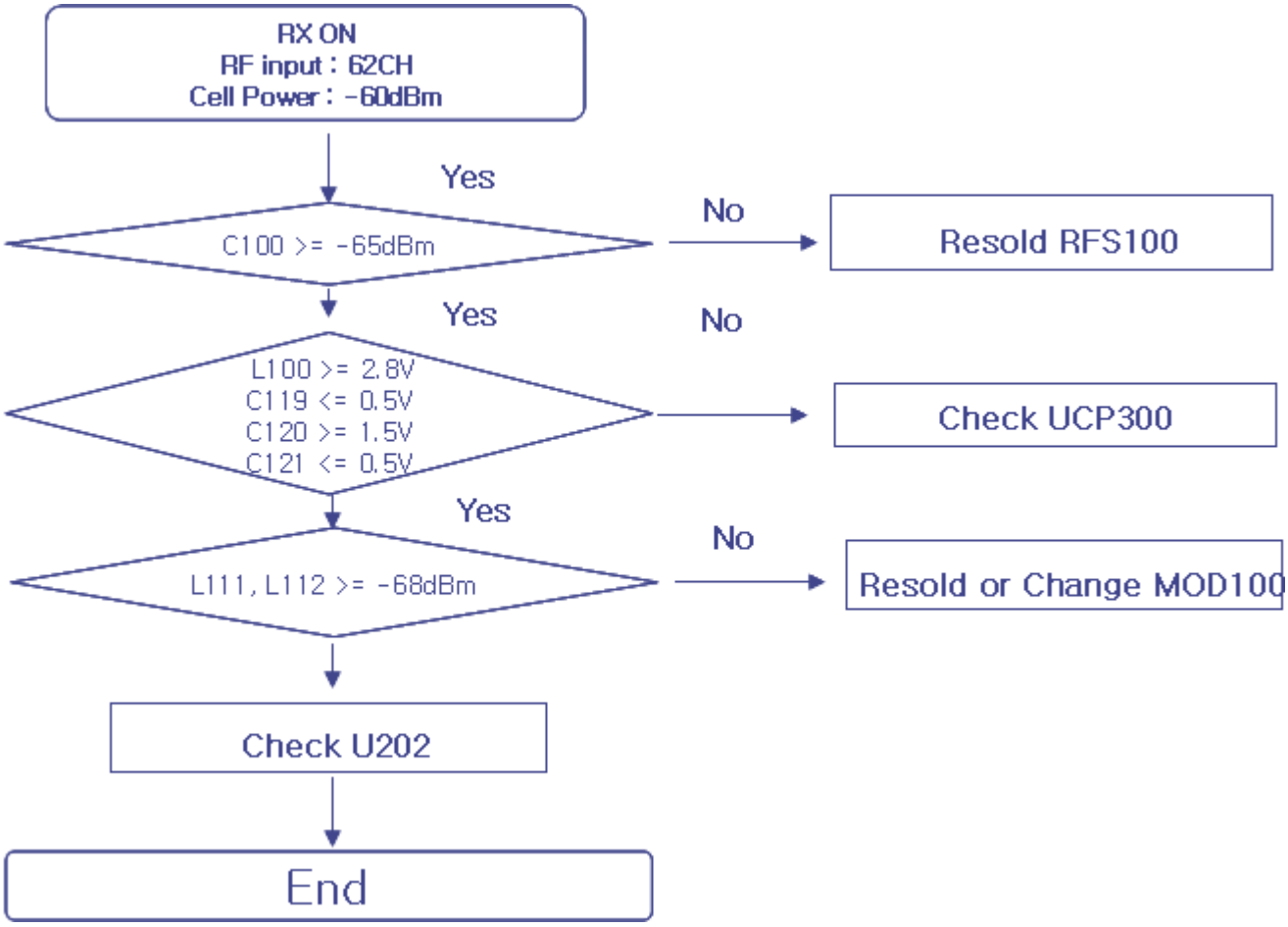

SAMSUNG Proprietary-Contents may change without notice
This Document can not be used without Samsung's authorization

10-2-2. DCS Rx

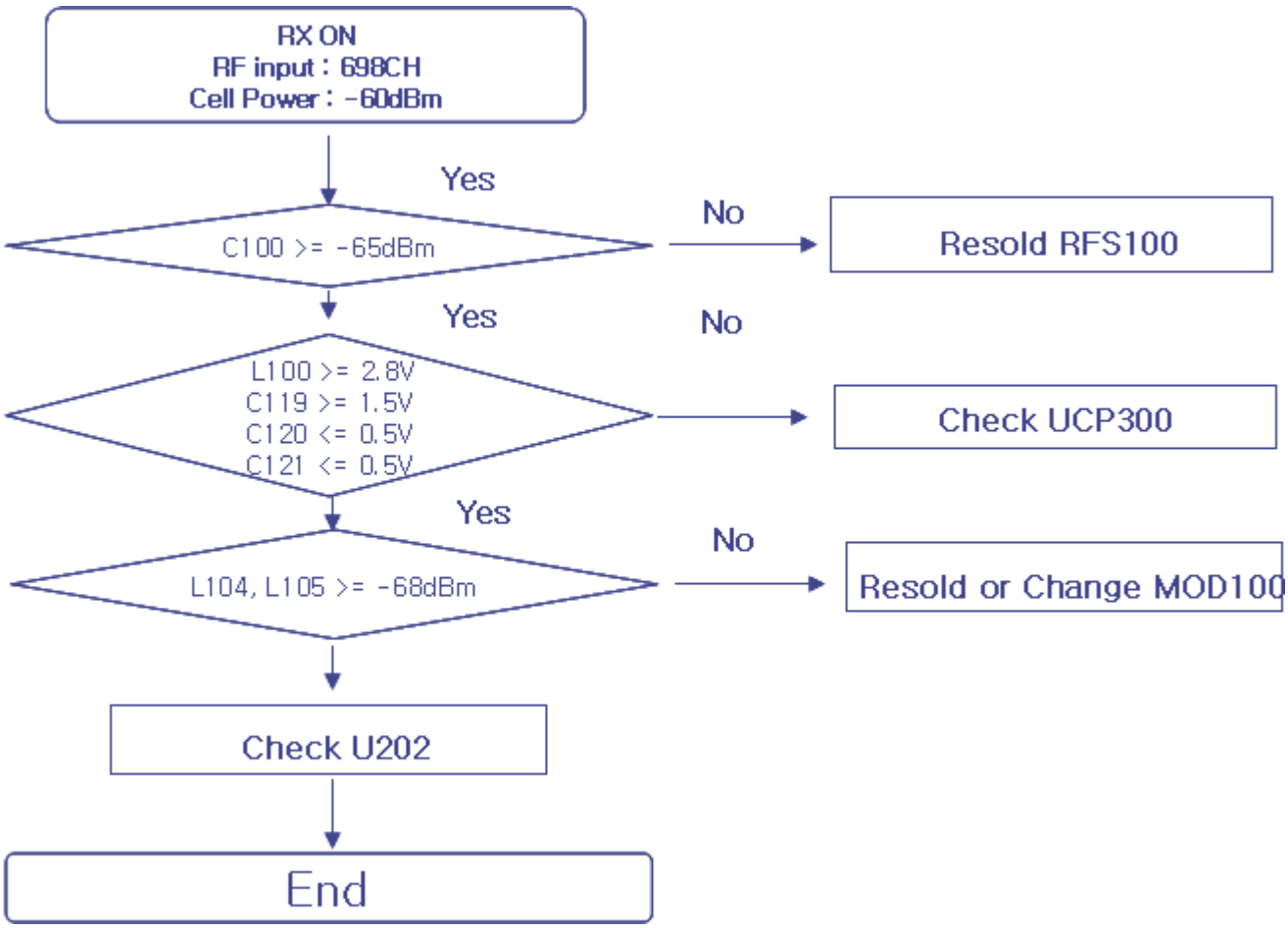

SAMSUNG Proprietary-Contents may change without notice
This Document can not be used without Samsung's authorization

10-2-3. PCS Rx

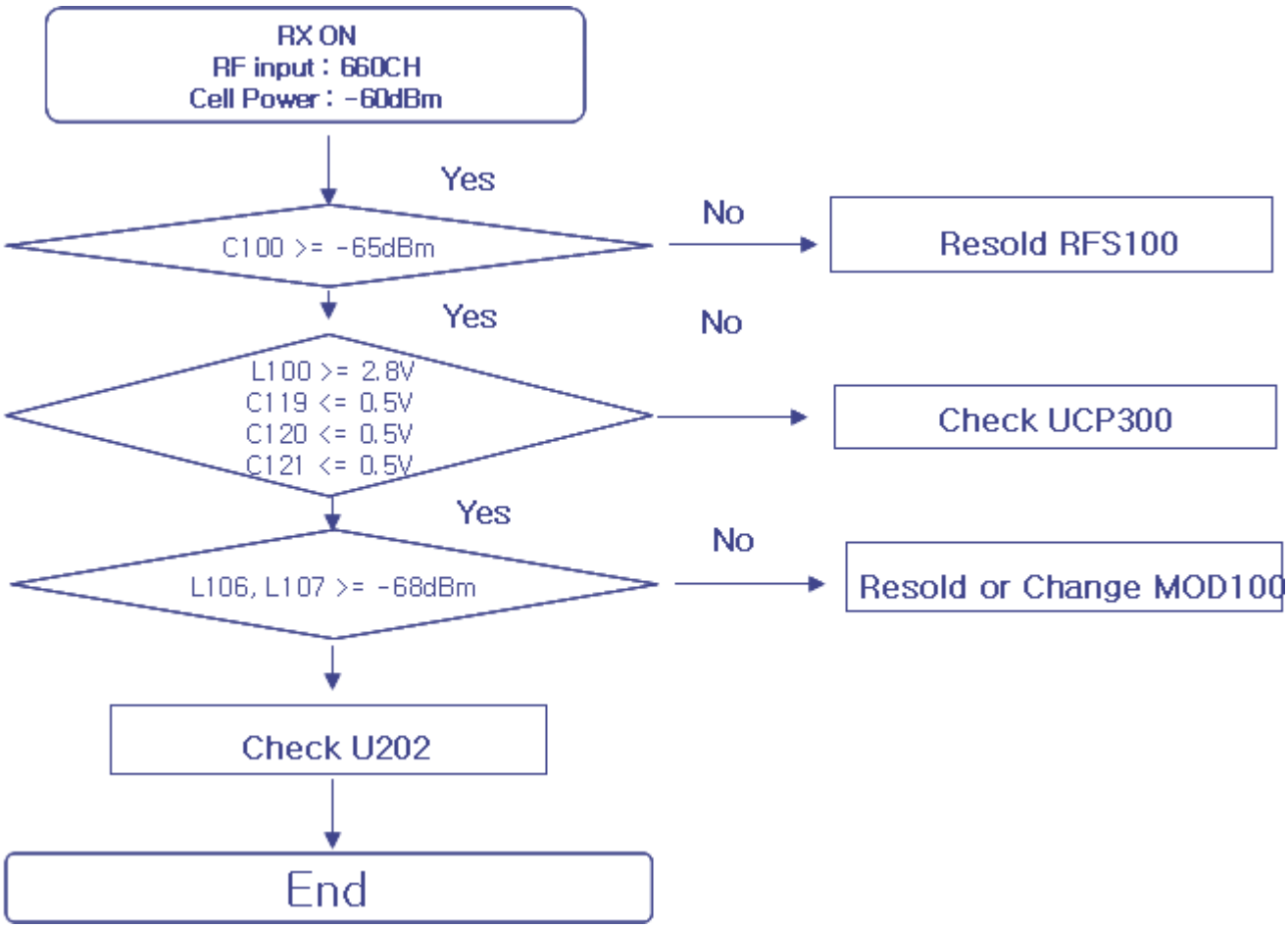

SAMSUNG Proprietary-Contents may change without notice
This Document can not be used without Samsung's authorization

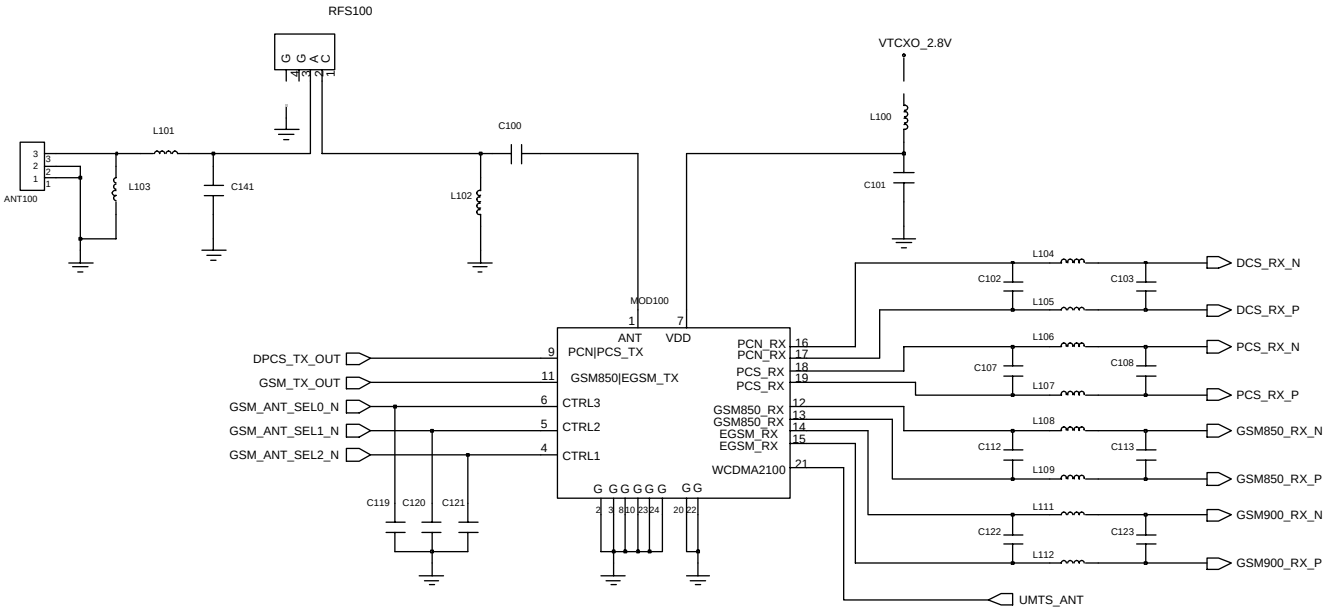

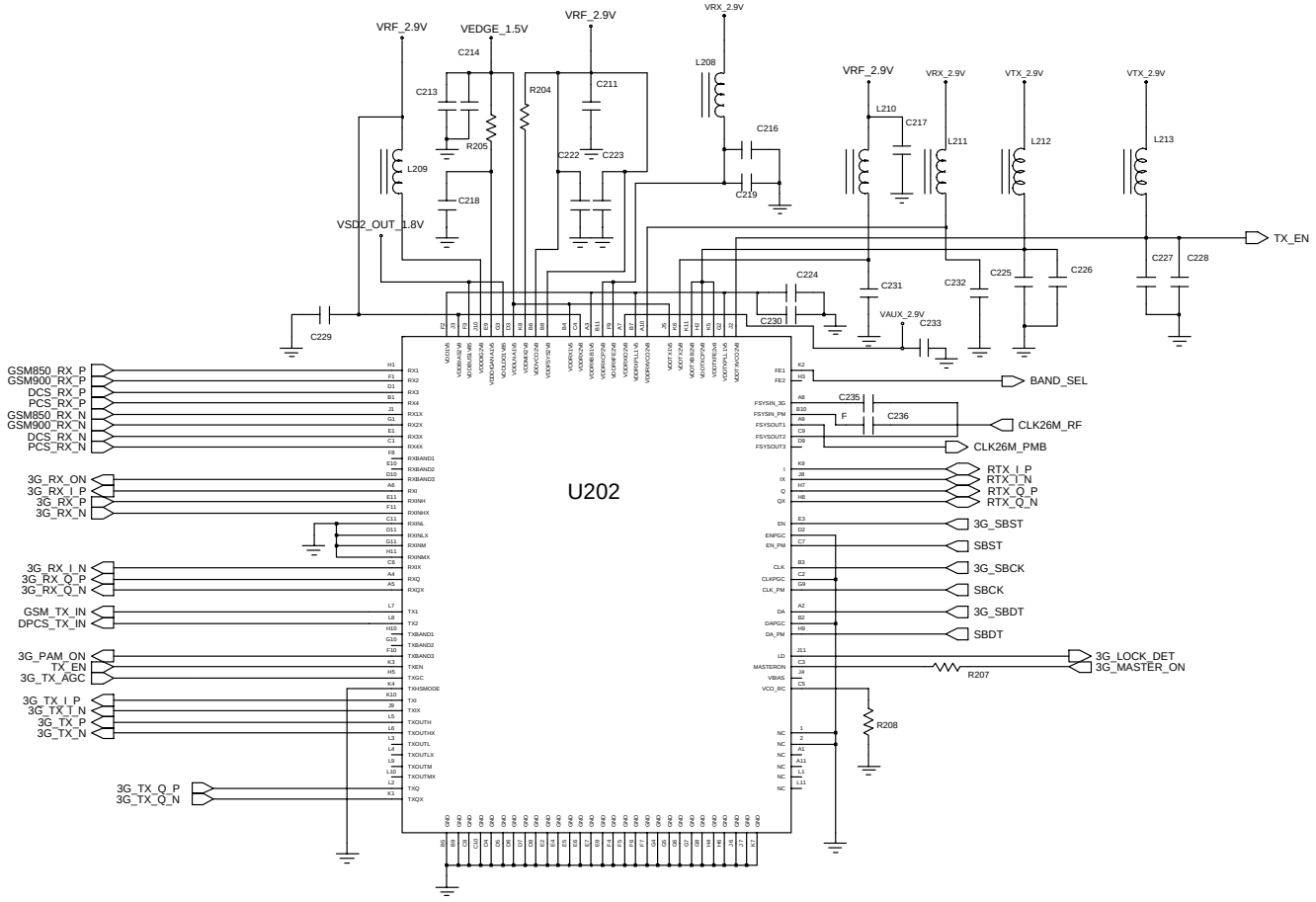

SAMSUNG Proprietary-Contents may change without notice
This Document can not be used without Samsung's authorization

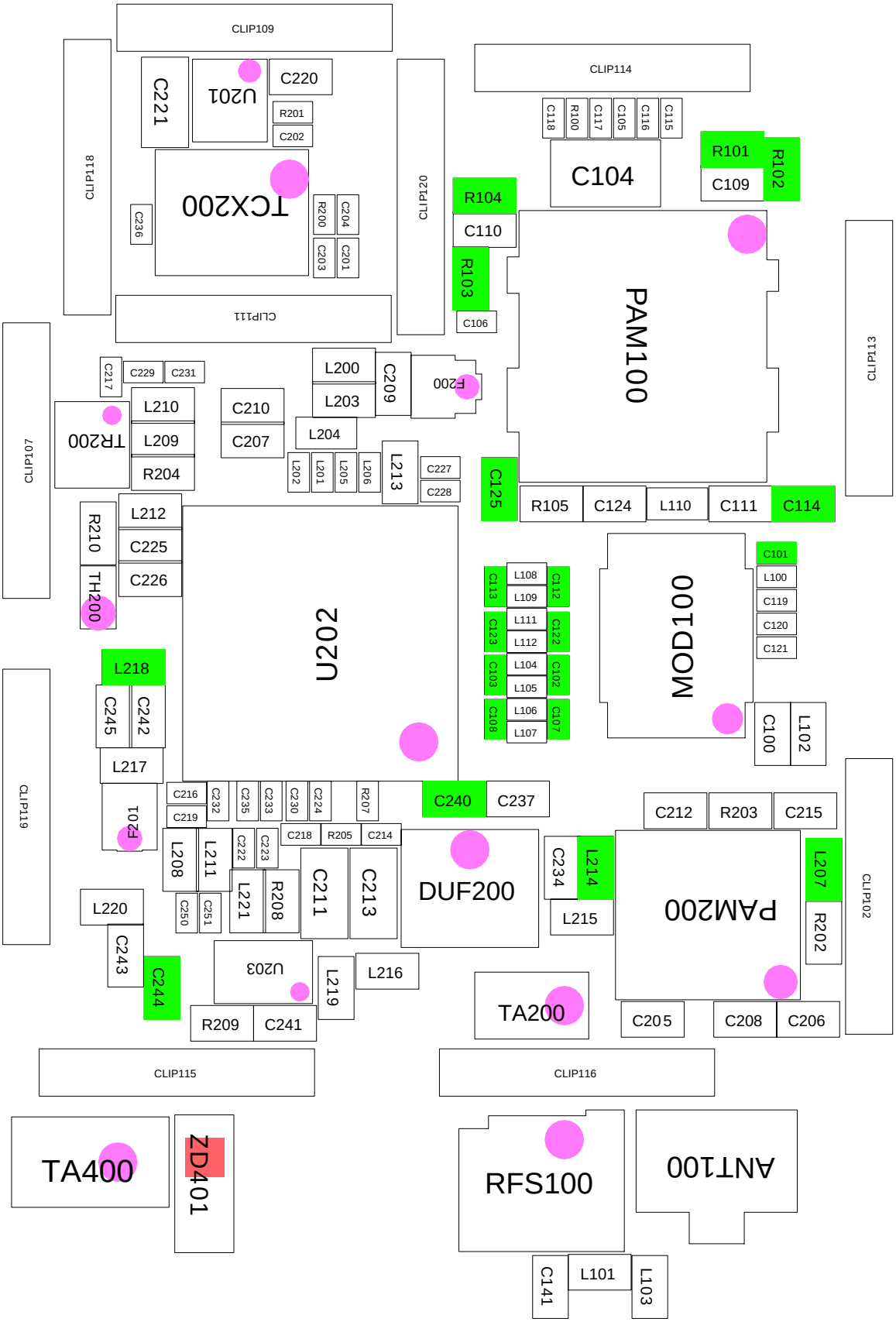

SAMSUNG Proprietary-Contents may change without notice
This Document can not be used without Samsung's authorization

10-2-4. EGSM Tx

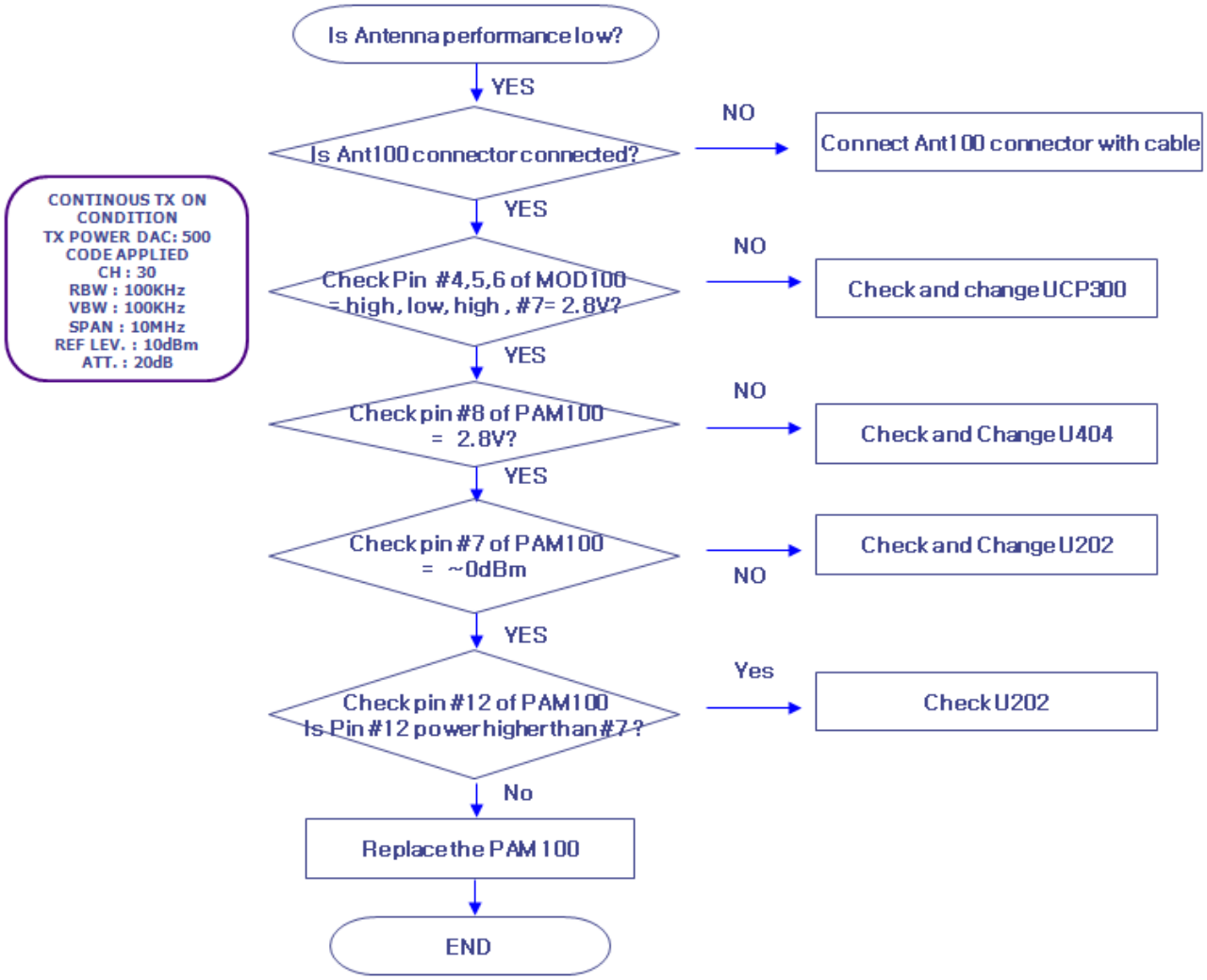

SAMSUNG Proprietary-Contents may change without notice
This Document can not be used without Samsung's authorization

10-2-5. DCS & PCS Tx

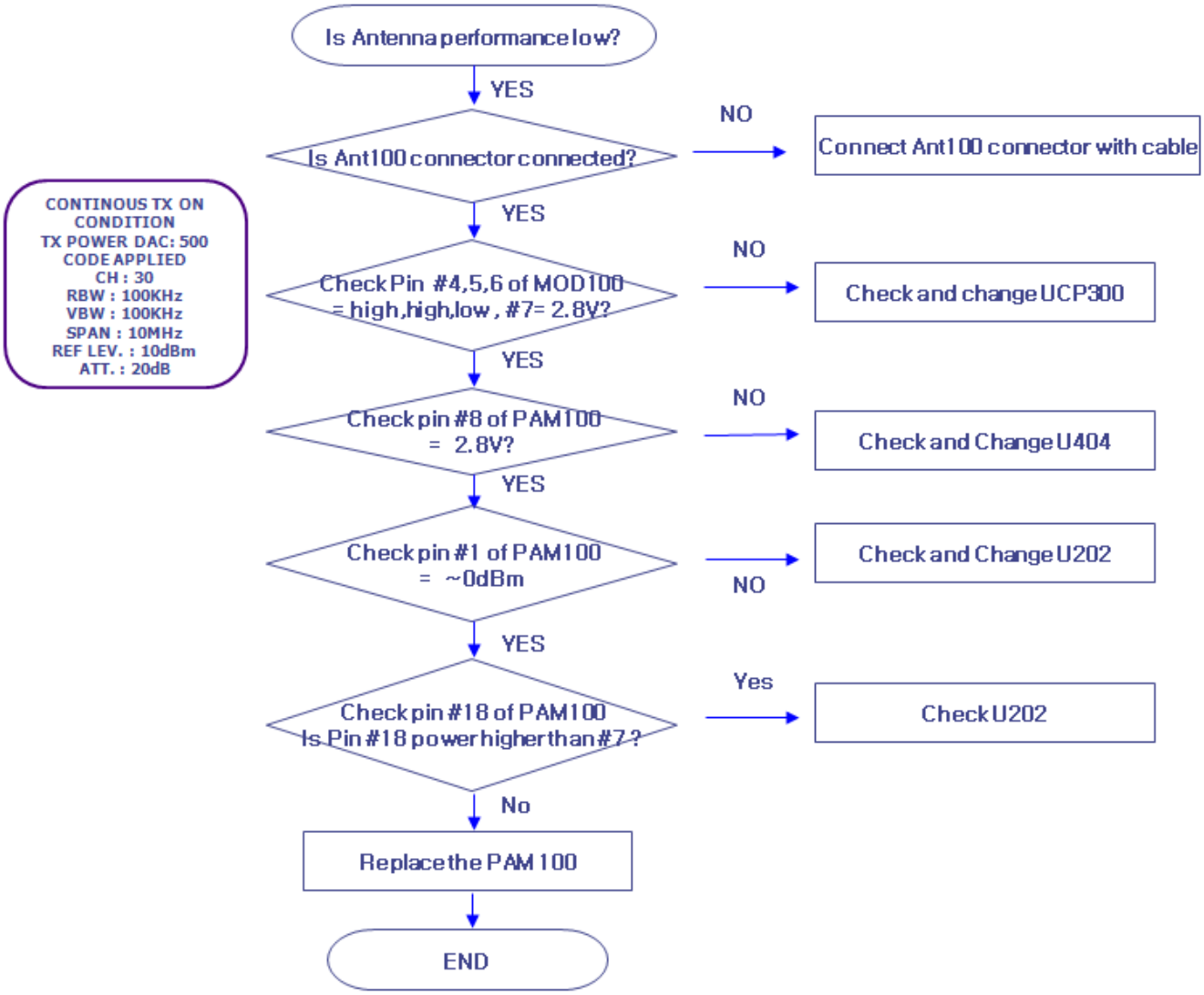

SAMSUNG Proprietary-Contents may change without notice
This Document can not be used without Samsung's authorization

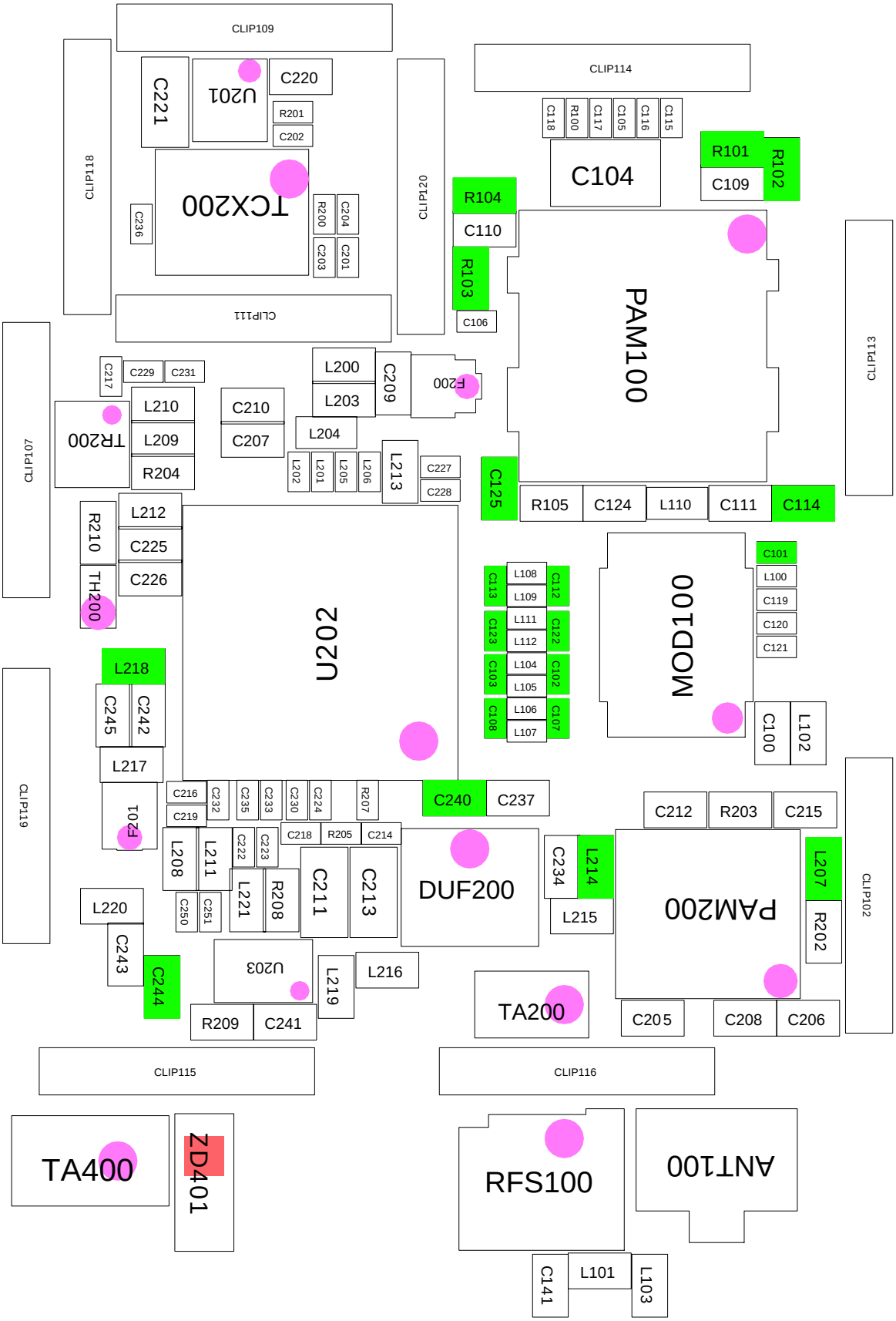

SAMSUNG Proprietary-Contents may change without notice
This Document can not be used without Samsung's authorization

10-2-6. WCDMA Rx

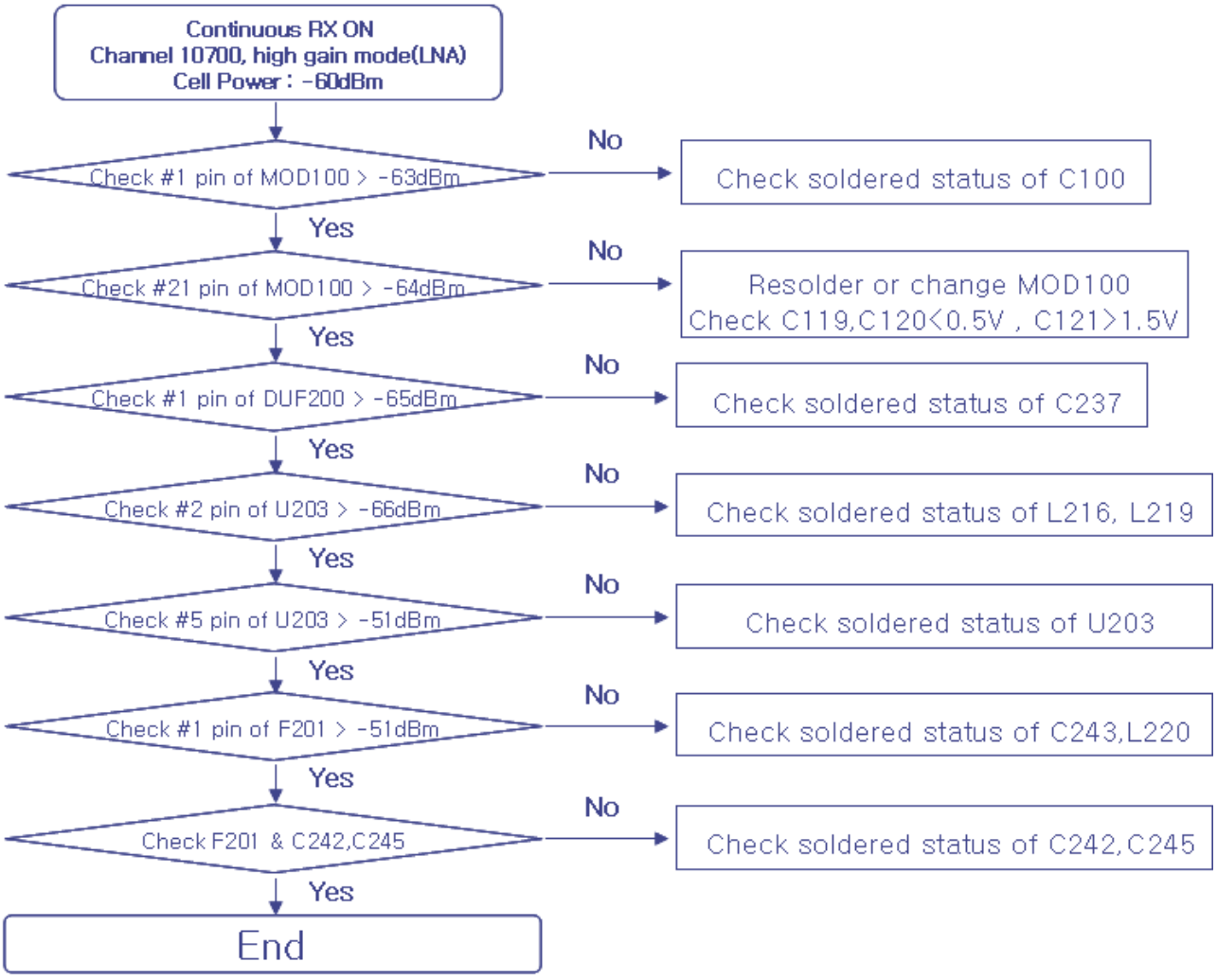

SAMSUNG Proprietary-Contents may change without notice
This Document can not be used without Samsung's authorization

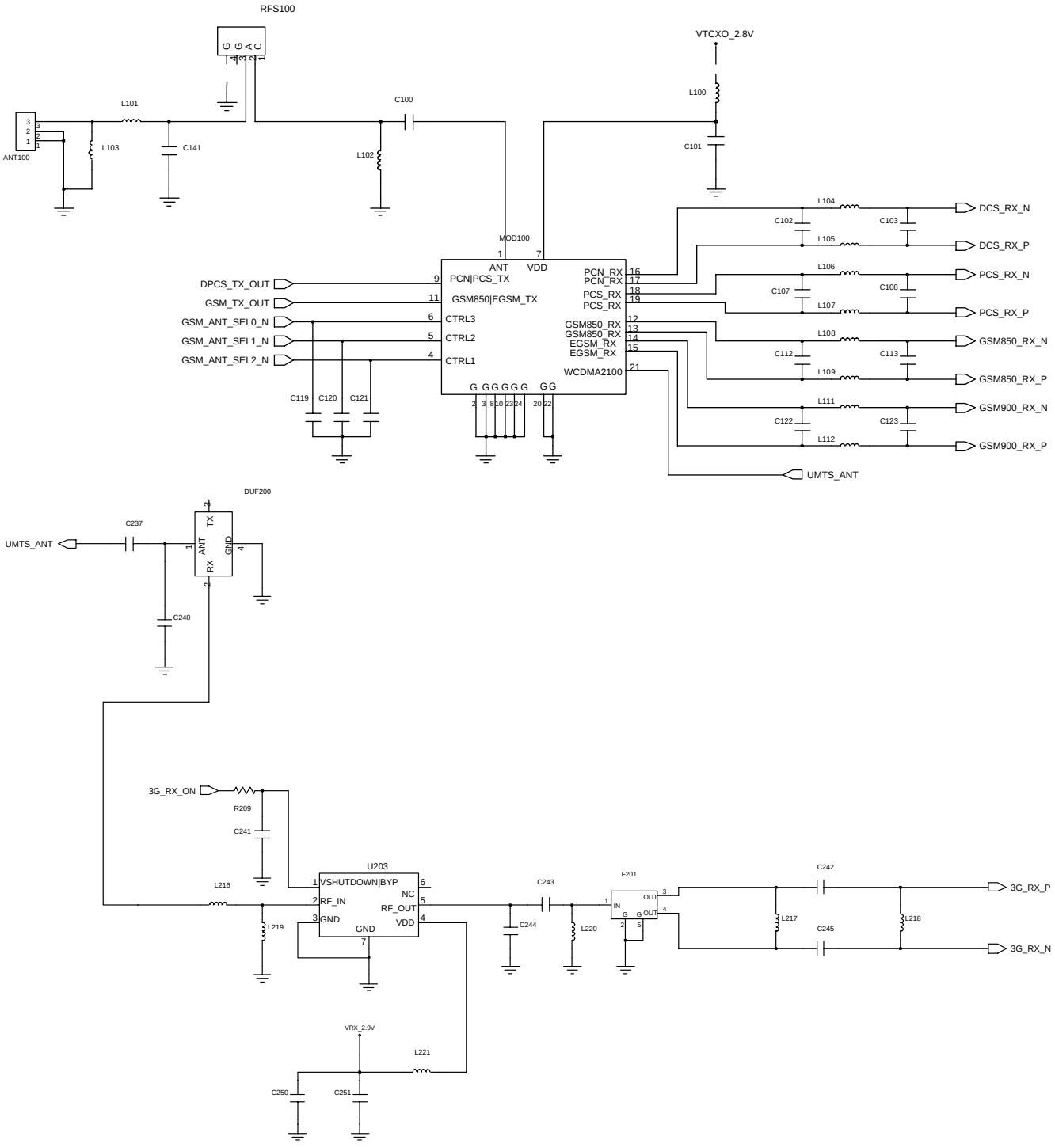

SAMSUNG Proprietary-Contents may change without notice
This Document can not be used without Samsung's authorization

10-2-7. WCDMA Tx

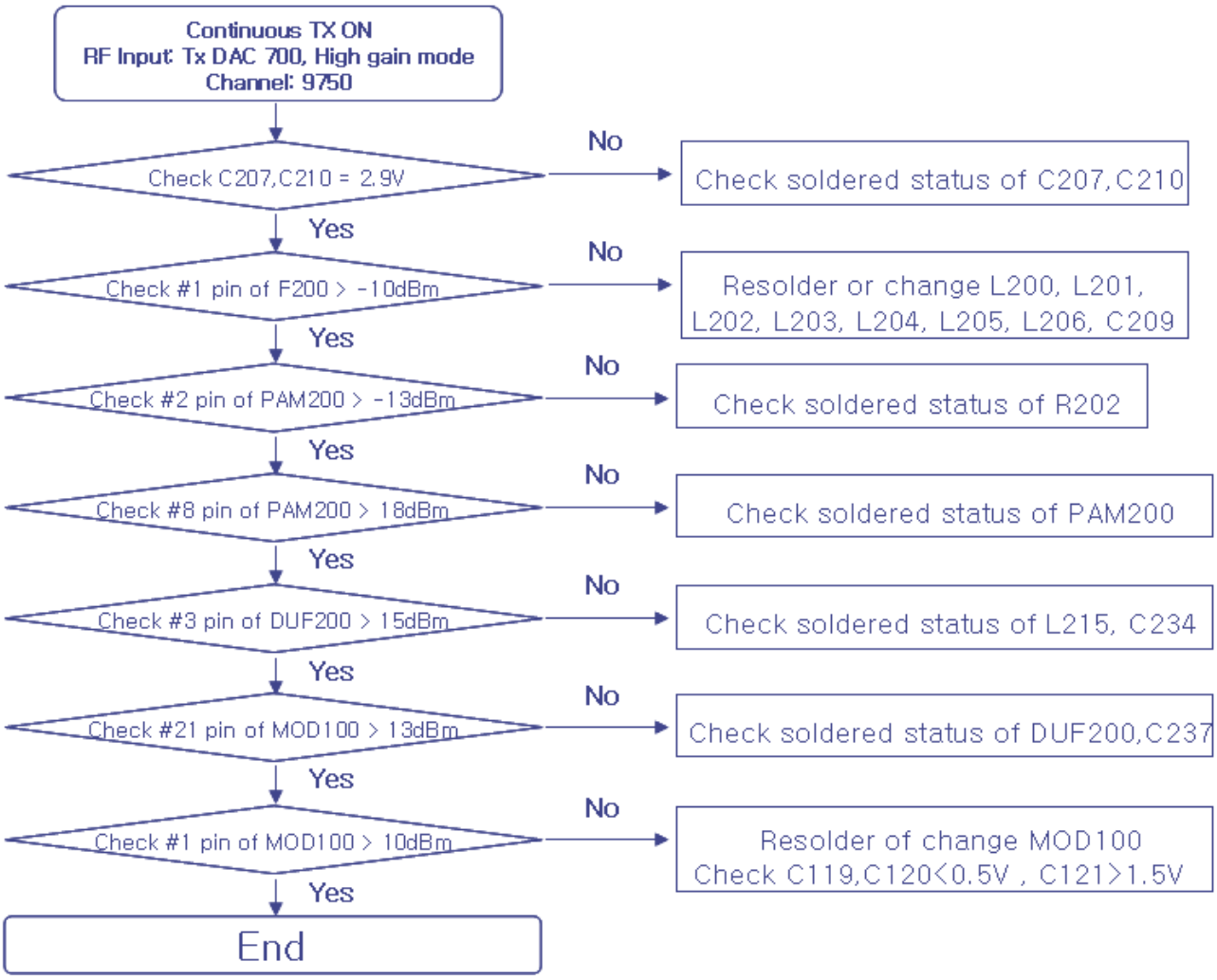

SAMSUNG Proprietary-Contents may change without notice
This Document can not be used without Samsung's authorization

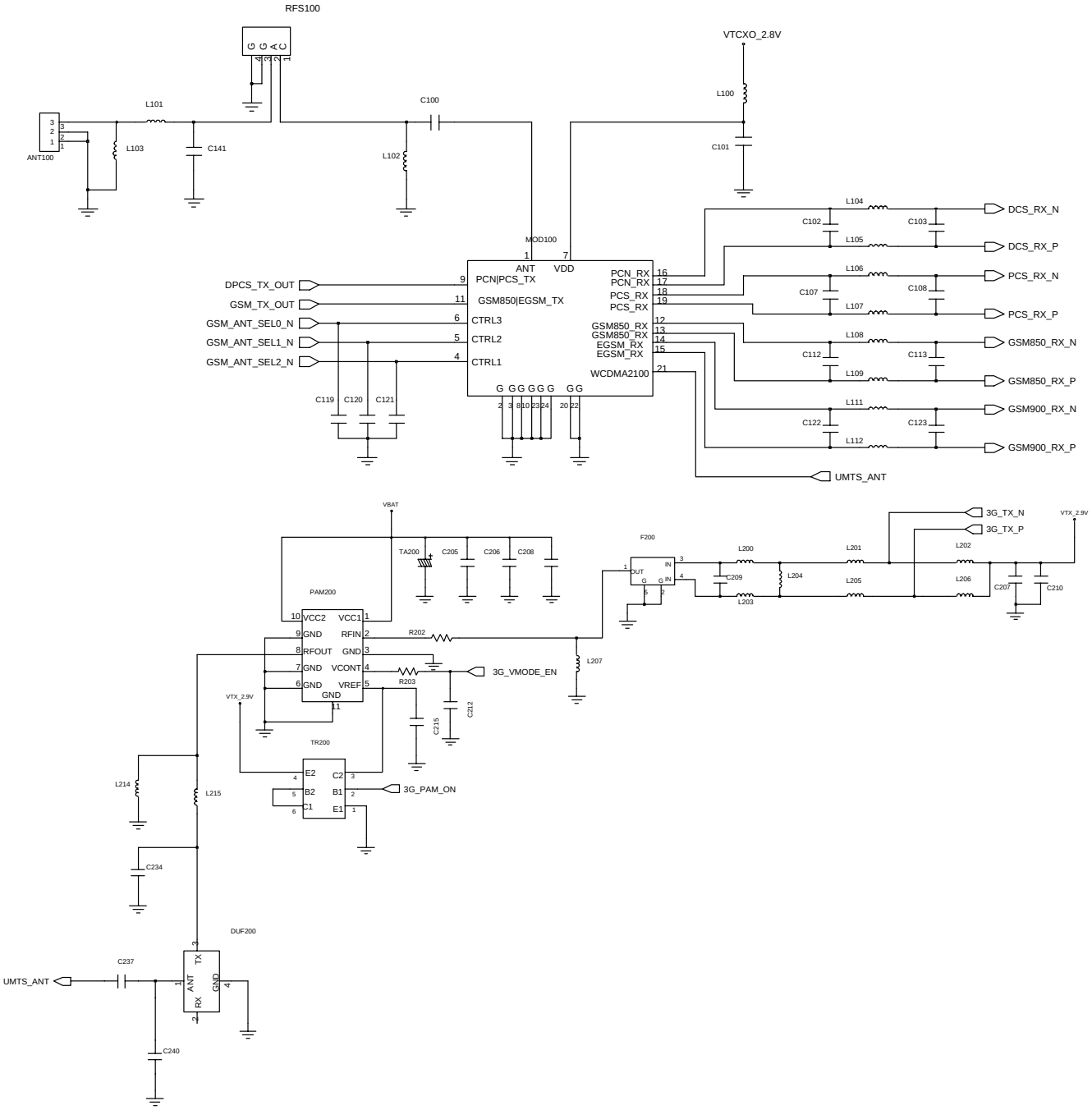

SAMSUNG Proprietary-Contents may change without notice
This Document can not be used without Samsung's authorization

10-2-6. BLUETOOTH

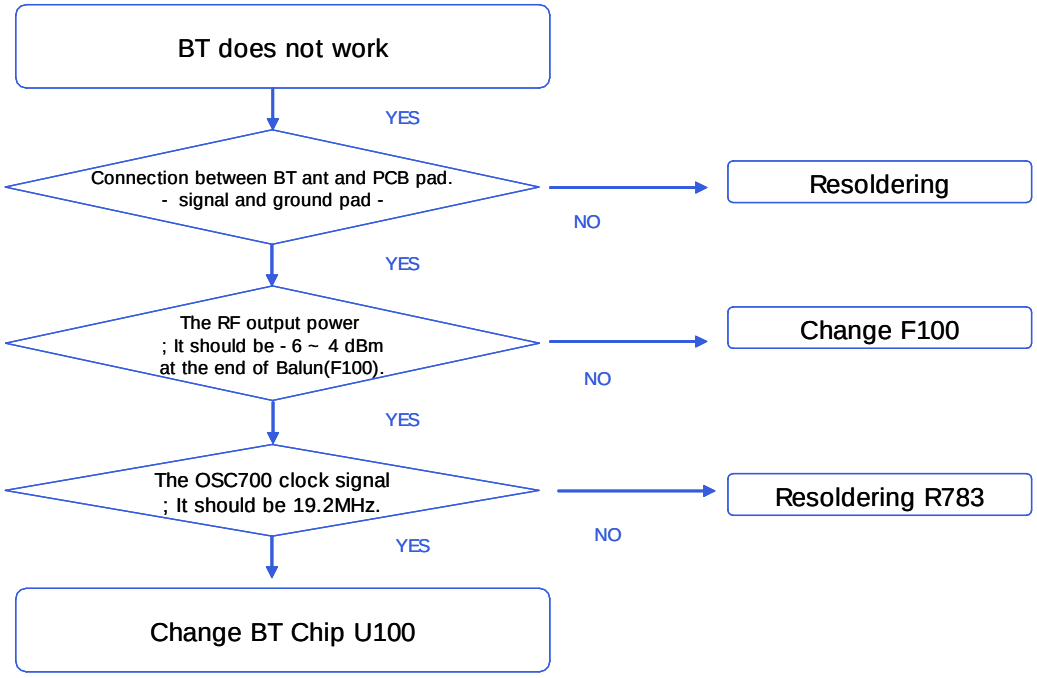

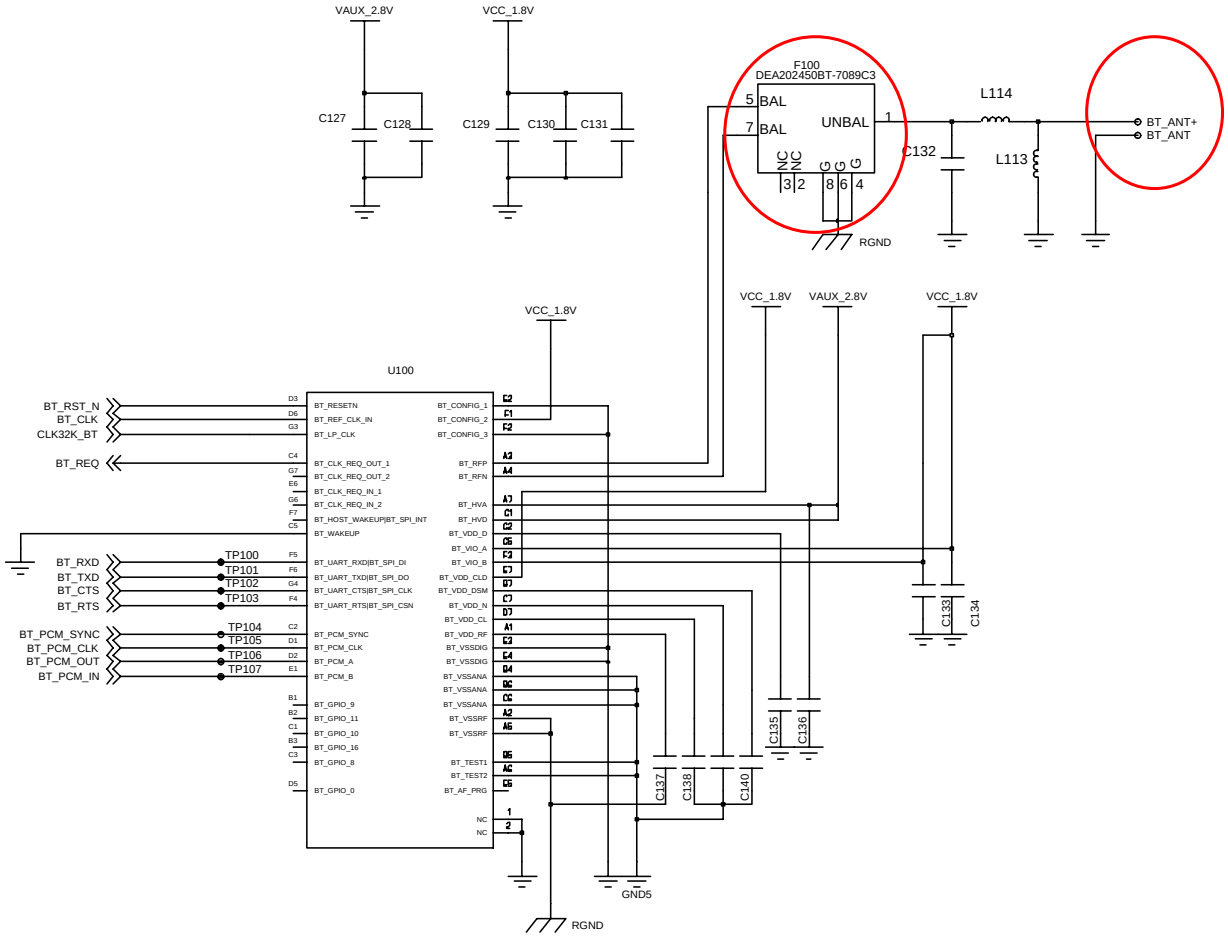

SAMSUNG Proprietary-Contents may change without notice
This Document can not be used without Samsung's authorization

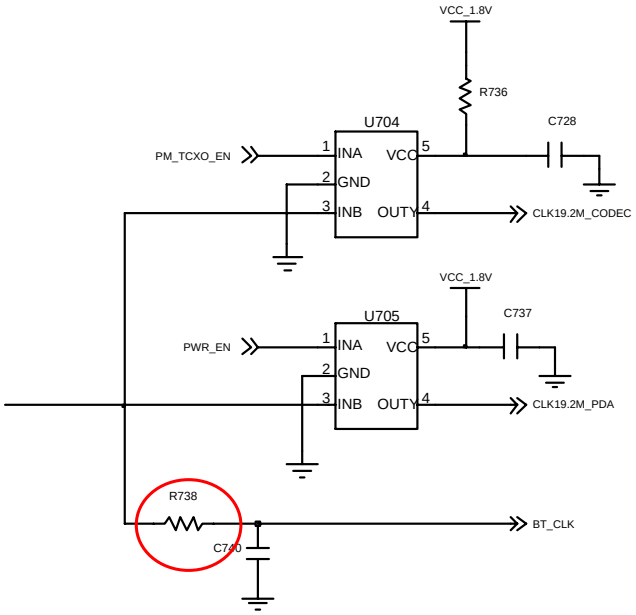

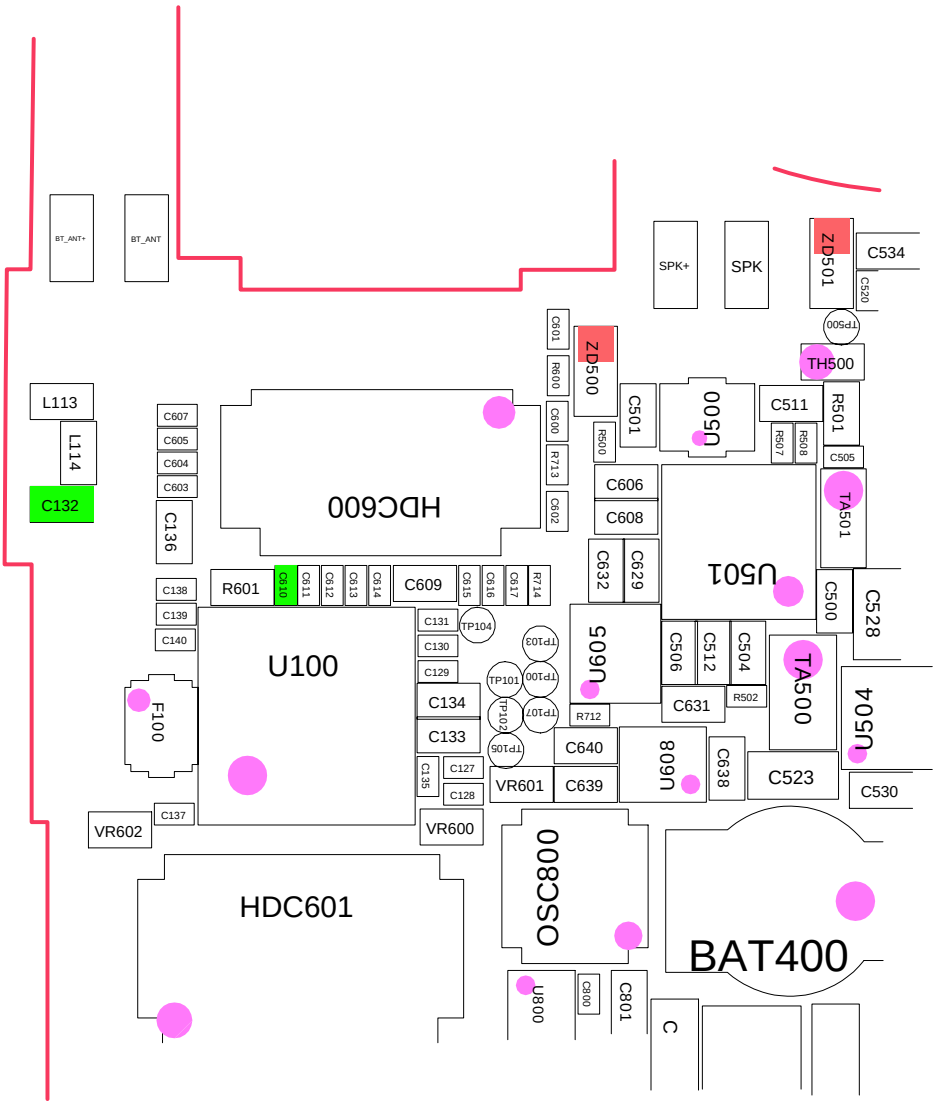

SAMSUNG Proprietary-Contents may change without notice
This Document can not be used without Samsung's authorization

4. Array course control

Test Jig (GH80-03307A)

RF Test Cable
(GH39-00985A)

Test Cable
(GH39-00895A / GH39-00892A)

DATA CABLE
(GH39-00859B)

SAMSUNG Proprietary-Contents may change without notice

This Document can not be used without Samsung's authorization

Software Downloading

4-1. Downloading Binary Files

1) 9 binary files for i200

- click_all.lst
- click_splash.bin
- EBOOT.bin
- EBOOT.nb0
- NAND.bin
- psi.flb
- slb.flb
- CLICK.fls
- CLICK.eep

4-2. Pre-requsite for Downloading

- Downloader Program (ClickFlash V0.1Beta.exe)
- SGH-i200 Mobile Phone
- Data Cable
- Binary files

4-3. S/W Downloader Program

SAMSUNG Proprietary-Contents may change without notice
This Document can not be used without Samsung's authorization

4-3-1. Connection

① Connect SGH-i200 and JIG BOX
- Connect USB Port
- Reference the following feature

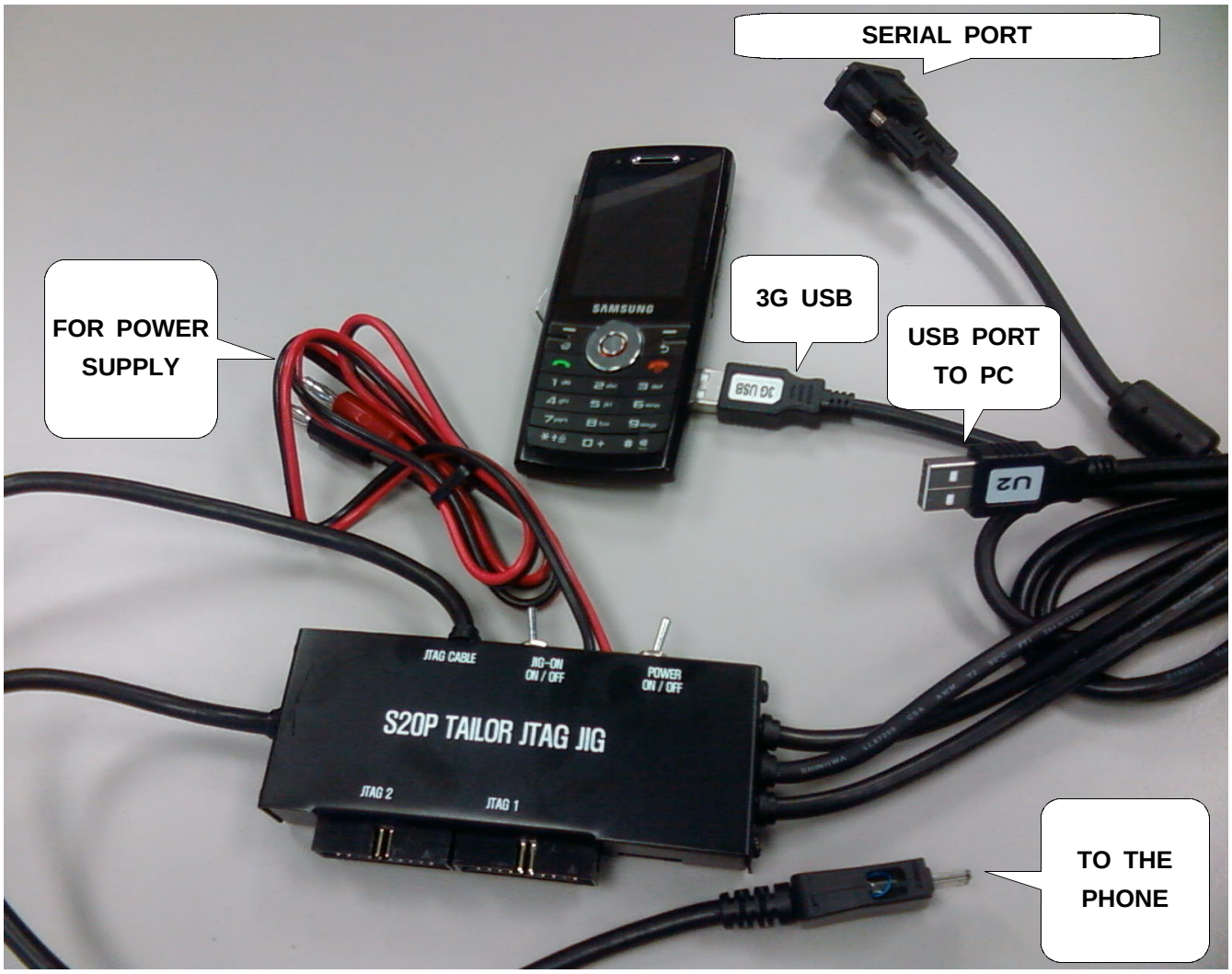

SAMSUNG Proprietary-Contents may change without notice
This Document can not be used without Samsung's authorization

4-3-2. Check PDA Image, Phone Image and USB Downloader.

① Check the Image

- Check PDA Image and Phone Image in Image Folder.

("i200BVHA1g" is the example in this Download manual.)

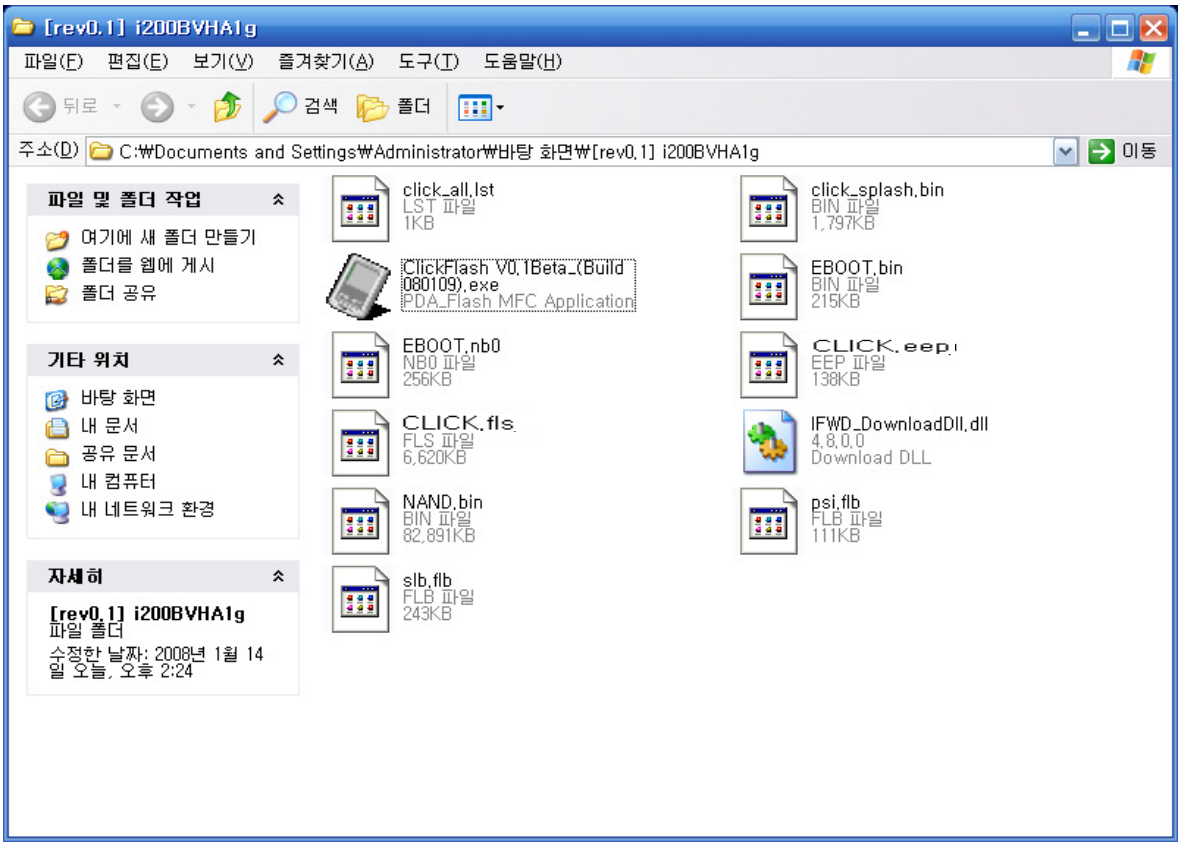

- **PDA Image**
  - click_splash.bin
  - EBOOT.bin
  - EBOOT.nb0
  - NAND.bin
- **Phone Image**
  - psi.flb
  - slb.flb
  - CLICK.fls
  - CLICK.eep
- **List File**
  - click_all.lst

SAMSUNG Proprietary-Contents may change without notice
This Document can not be used without Samsung's authorization

② Check the Download Tool

- Check USB Download tool in Image Folder.

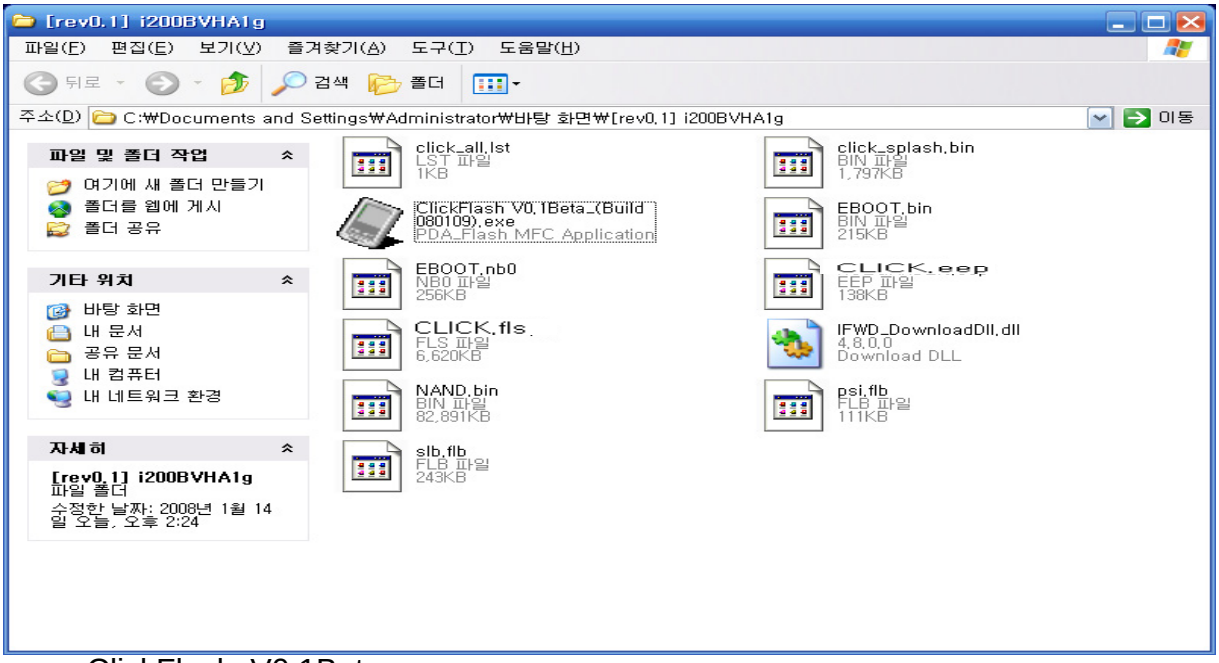

- ClickFlash V0.1Beta
- IFWD_DownloadDll.dll

4-3-3. Download the PDA Image and Phone Image.

① Execute ClickFlash V0.1Beta.exe

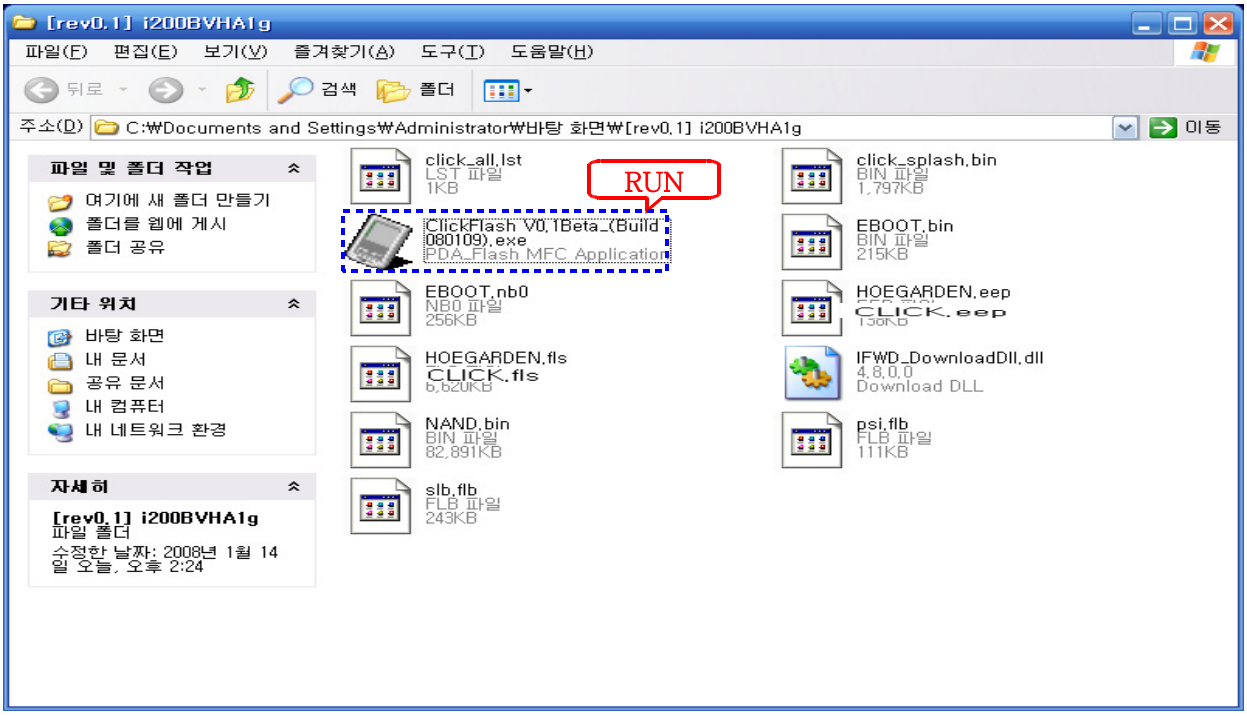

SAMSUNG Proprietary-Contents may change without notice
This Document can not be used without Samsung's authorization

- Hold the BACK Key (Soft 2 Key) and Power ON
- Click the Download Start button after booting

SAMSUNG Proprietary-Contents may change without notice
This Document can not be used without Samsung's authorization

② Exceptions

- If the drivers associated with the downloader are installed correctly, the downloader will show you increasing bar the following

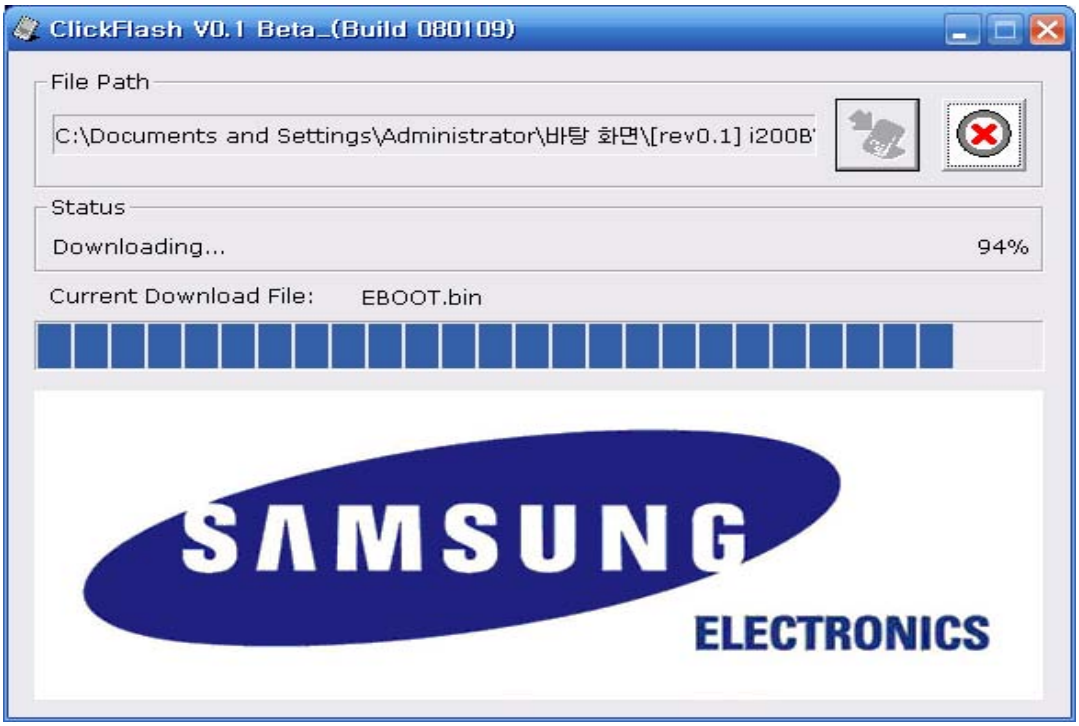

SAMSUNG Proprietary-Contents may change without notice
This Document can not be used without Samsung's authorization

- If the drivers are not installed or the drivers need to be installed again, you should follow this step.

(1) SAMSUNG MITs Handset Composite Device

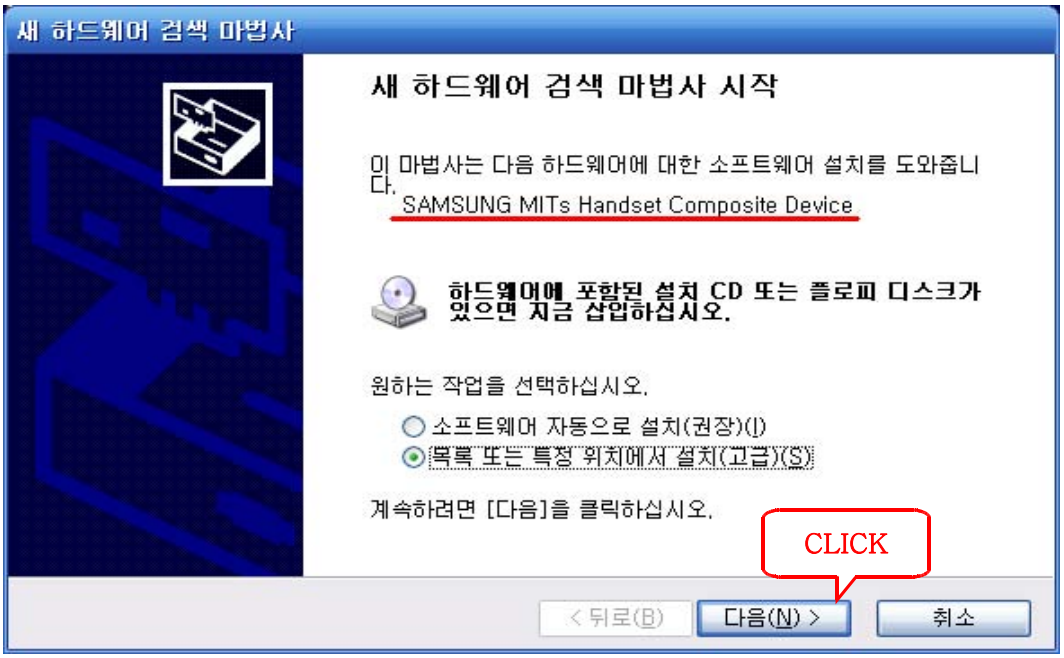

SAMSUNG Proprietary-Contents may change without notice
This Document can not be used without Samsung's authorization

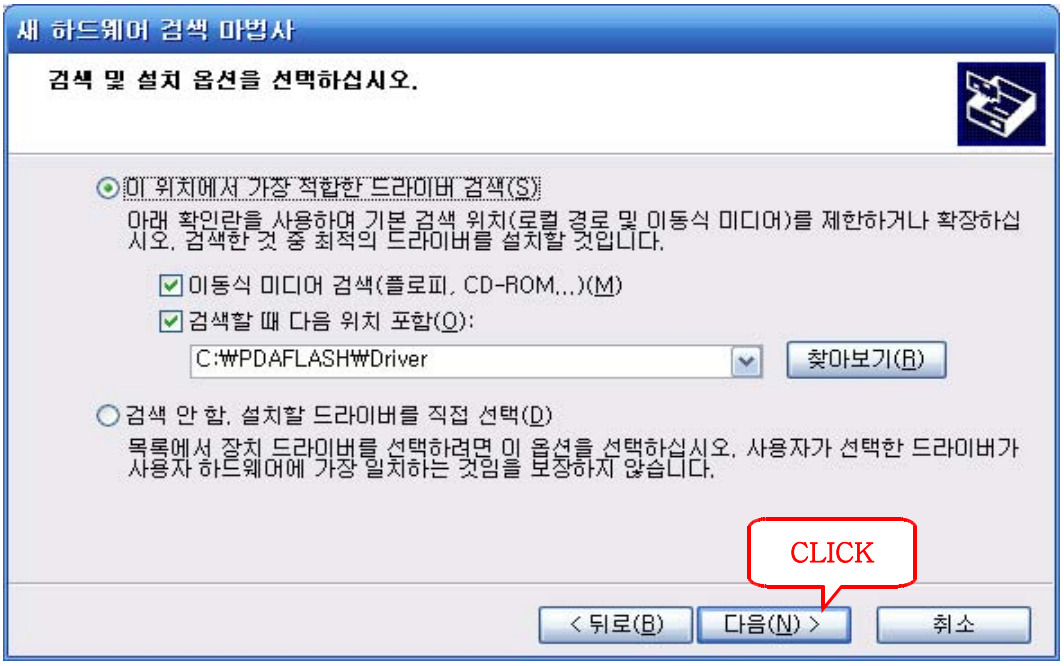

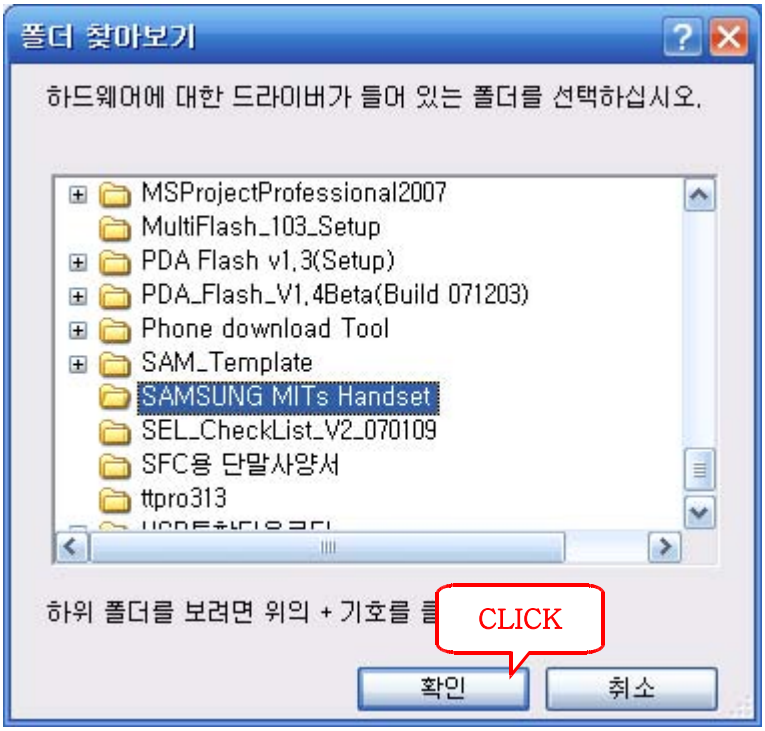

- Select the “SAMSUNG MITs Handset” Folder including the Drivers

SAMSUNG Proprietary-Contents may change without notice
This Document can not be used without Samsung's authorization

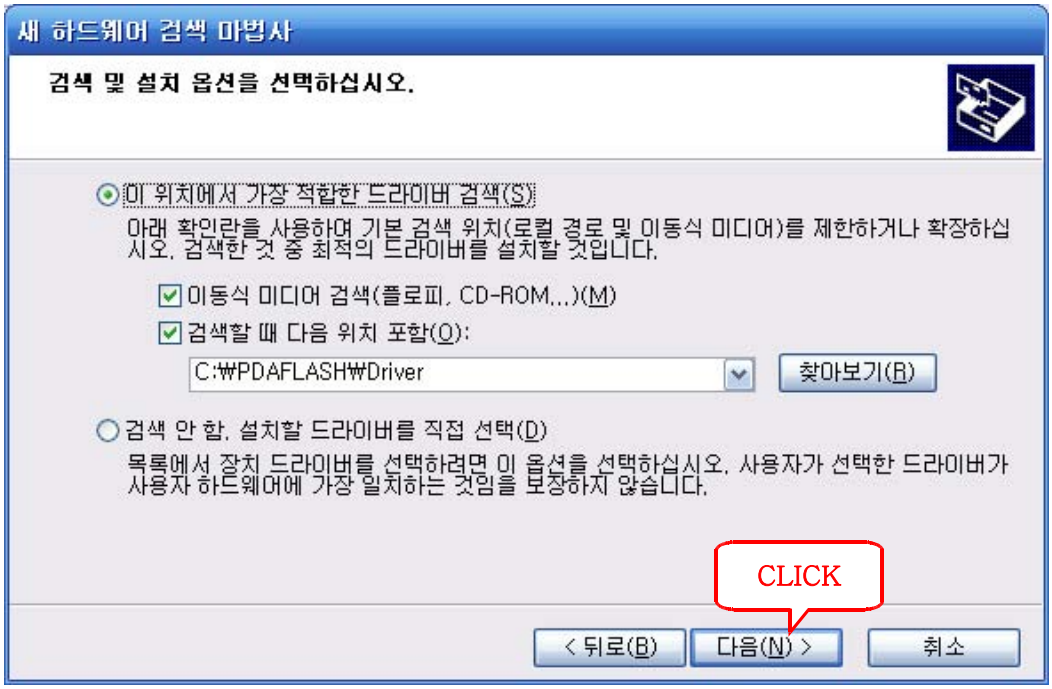

SAMSUNG Proprietary-Contents may change without notice
This Document can not be used without Samsung's authorization

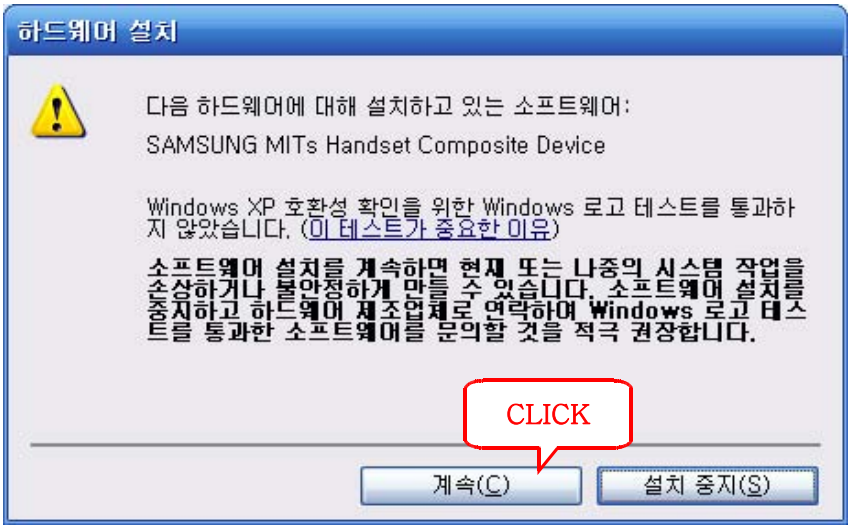

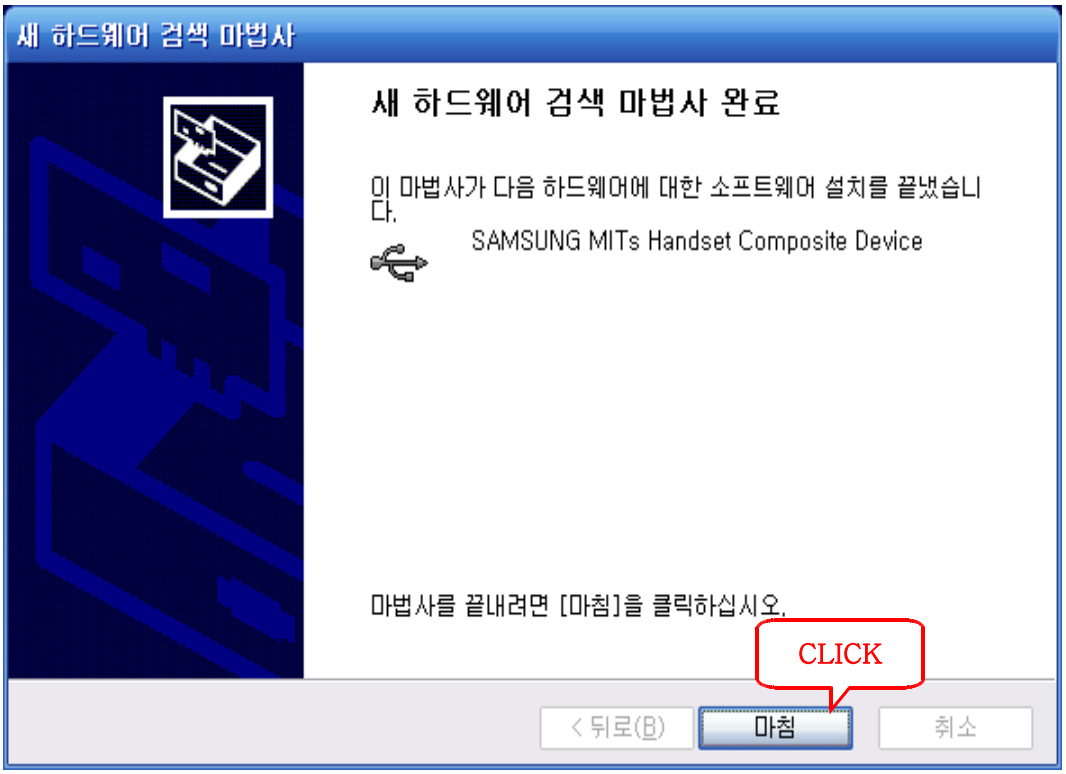

⑵ SAMSIMG MITs Handset

SAMSUNG Proprietary-Contents may change without notice
This Document can not be used without Samsung's authorization

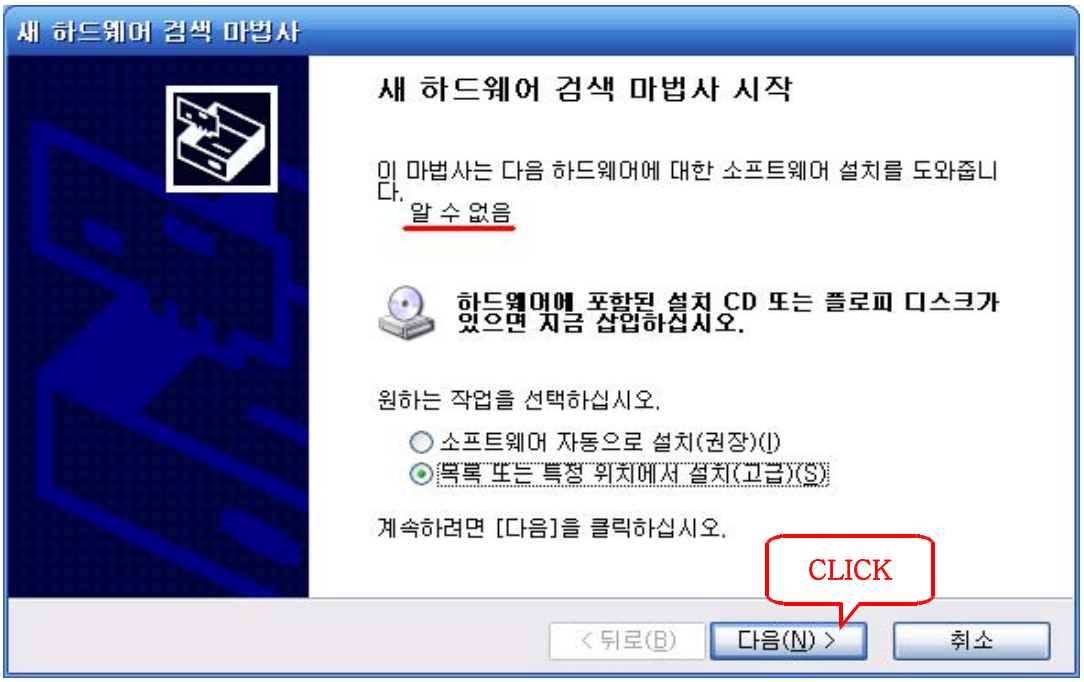

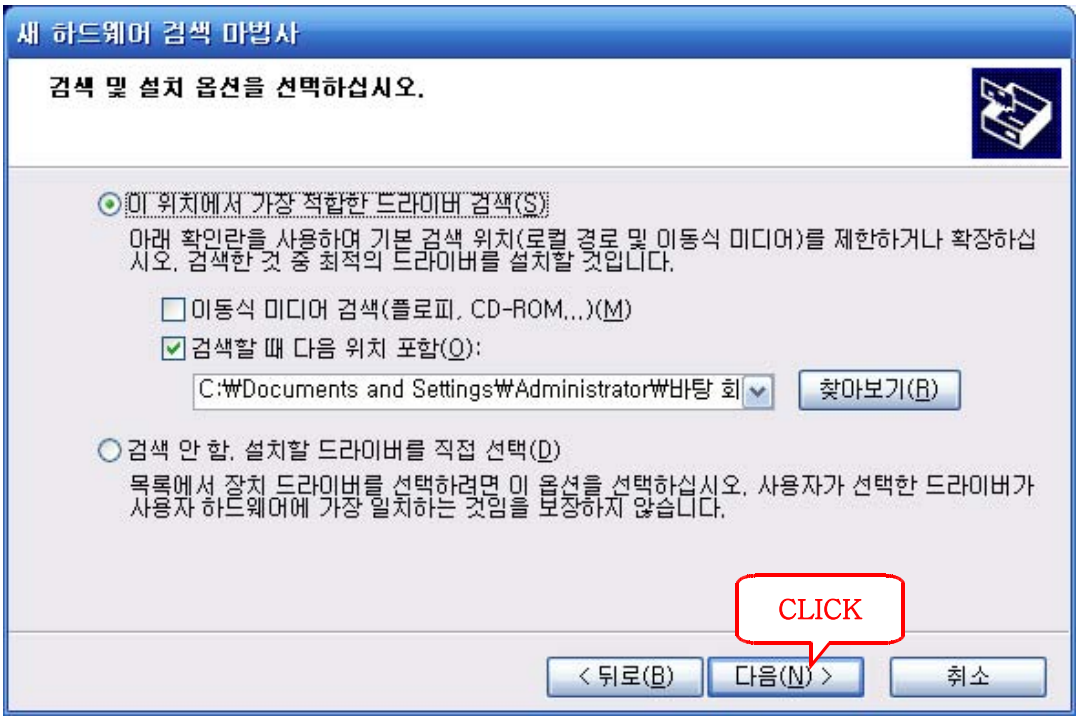

SAMSUNG Proprietary-Contents may change without notice
This Document can not be used without Samsung's authorization

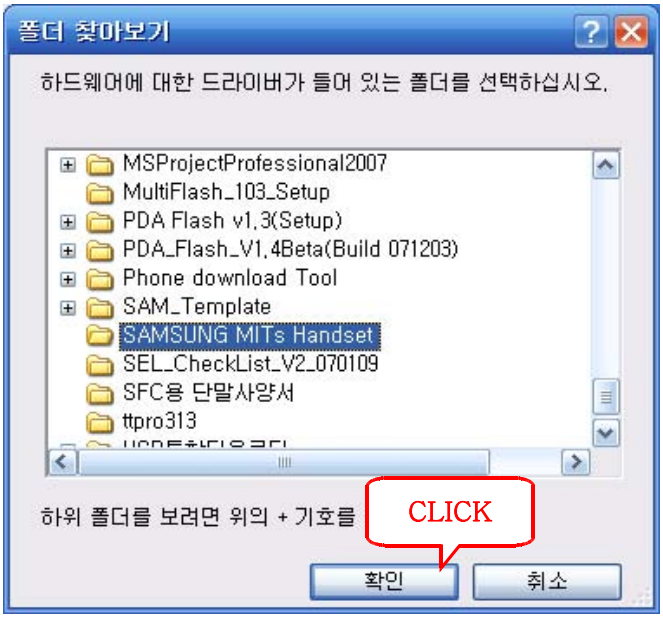

- Select the “SAMSUNG MITs Handset” Folder including the Drivers

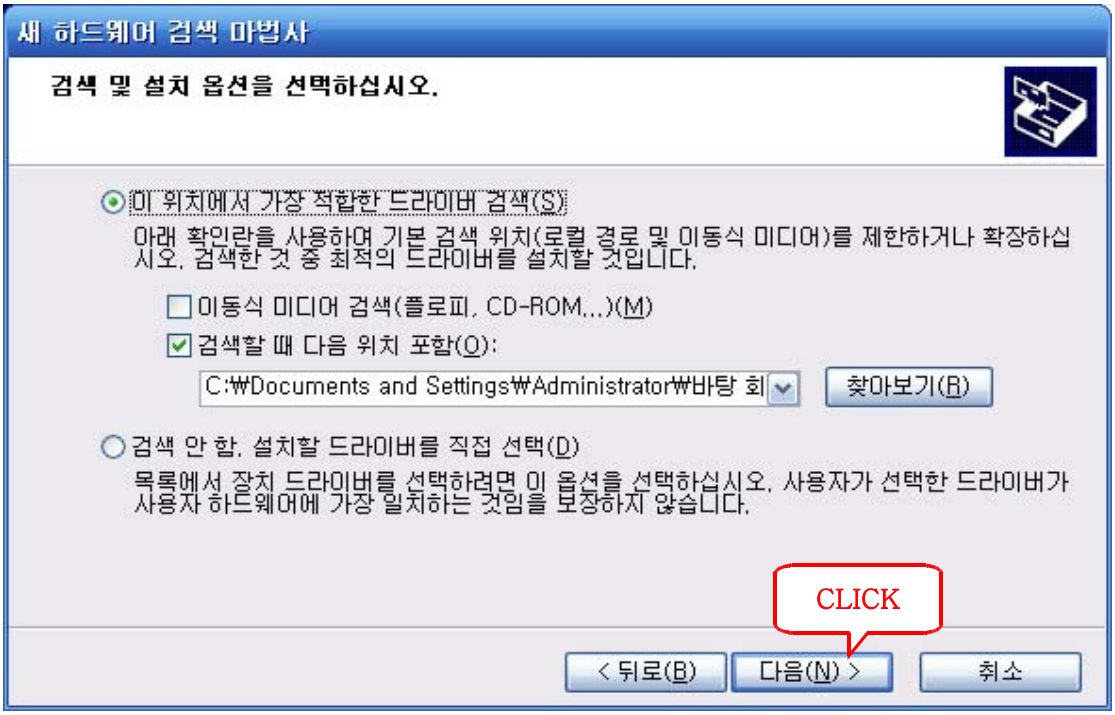

SAMSUNG Proprietary-Contents may change without notice
This Document can not be used without Samsung's authorization

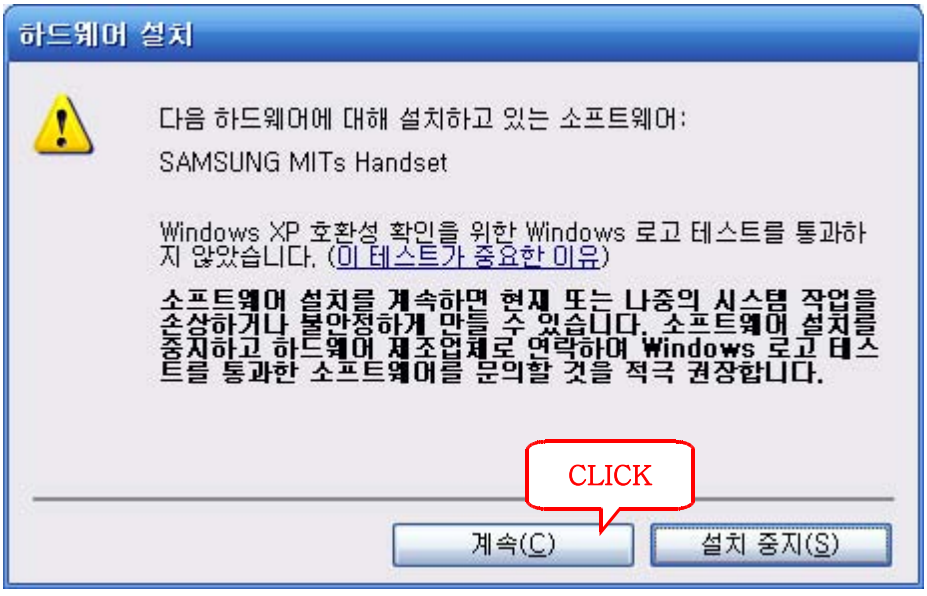

SAMSUNG Proprietary-Contents may change without notice
This Document can not be used without Samsung's authorization

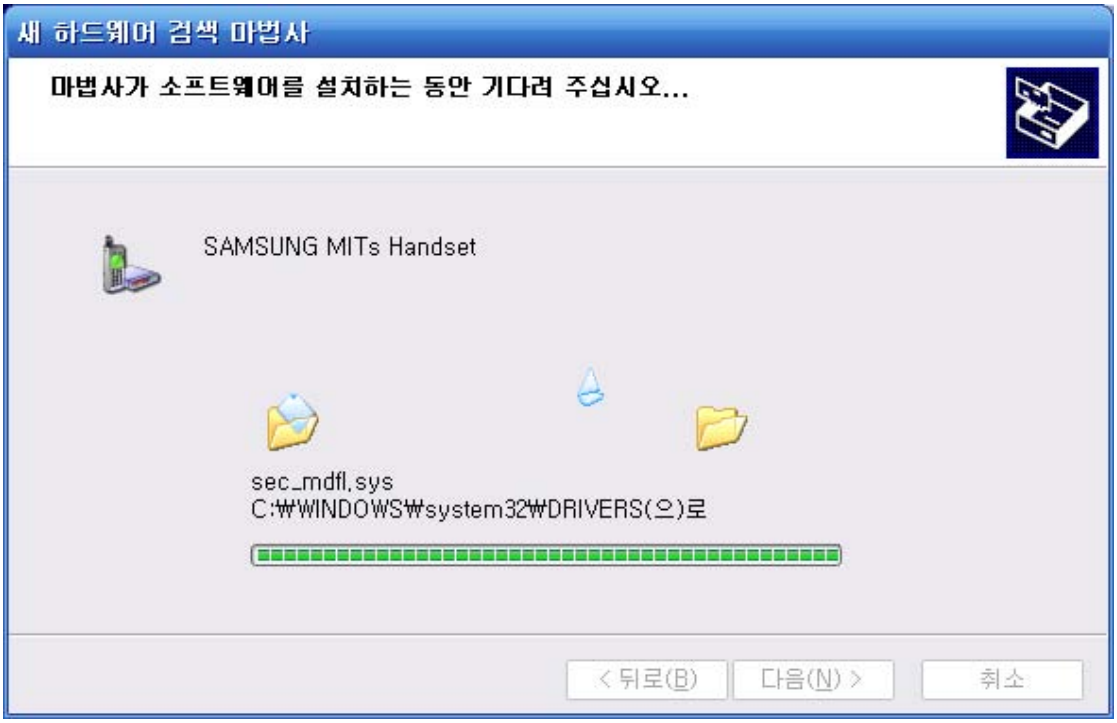

※ If this Window is not go to next step,

Just disconnect SGH-i200 and You can see the following Window.

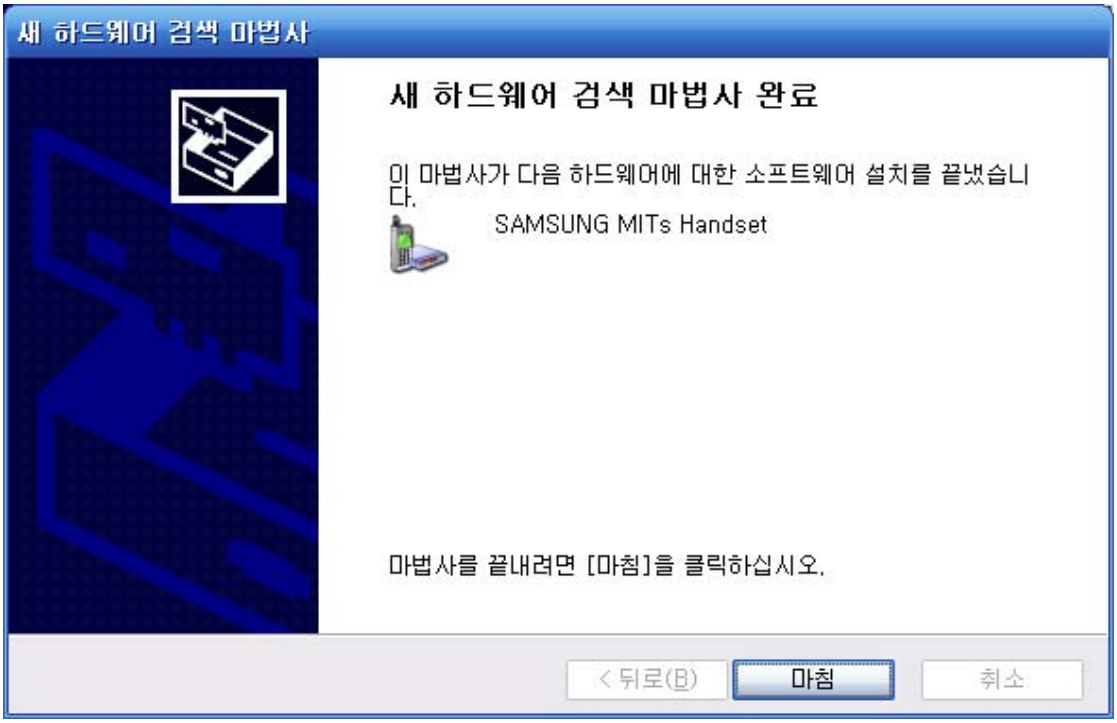

SAMSUNG Proprietary-Contents may change without notice
This Document can not be used without Samsung's authorization

③ Flash Loader utility (Phone Driver)

- After Finished PDA Image Download,
  the computer will search Flash Loader utility associated with phone download.

- This Window shows the moment from Downloading PDA image to Phone image.

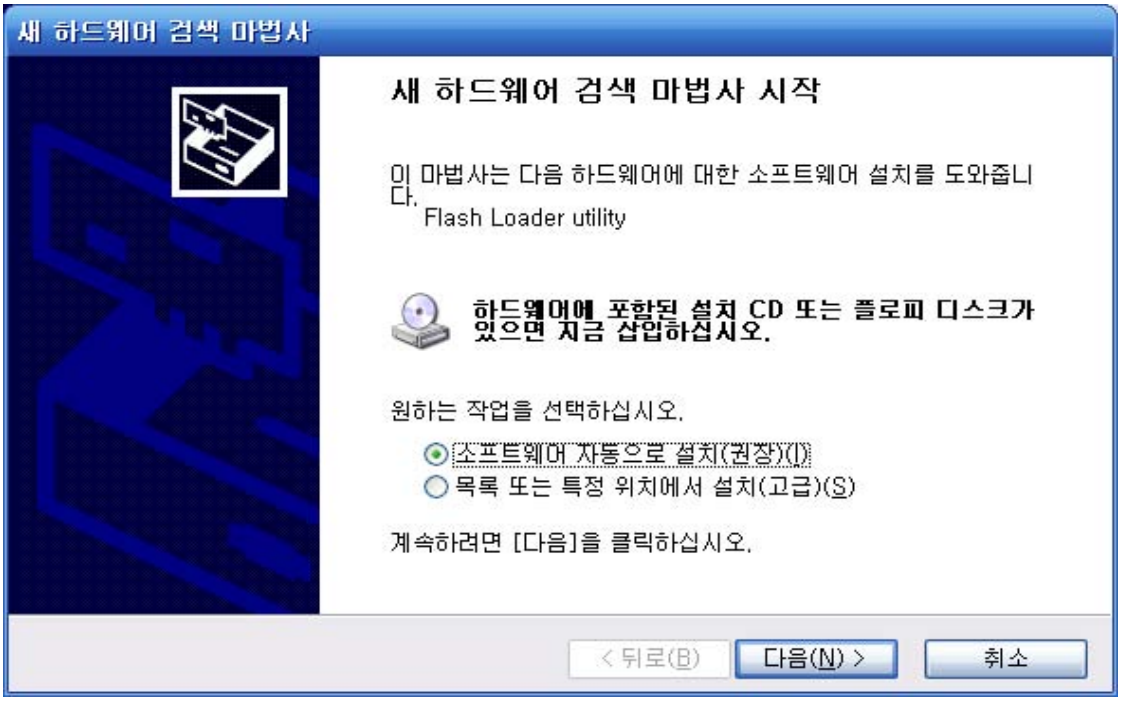

SAMSUNG Proprietary-Contents may change without notice
This Document can not be used without Samsung's authorization

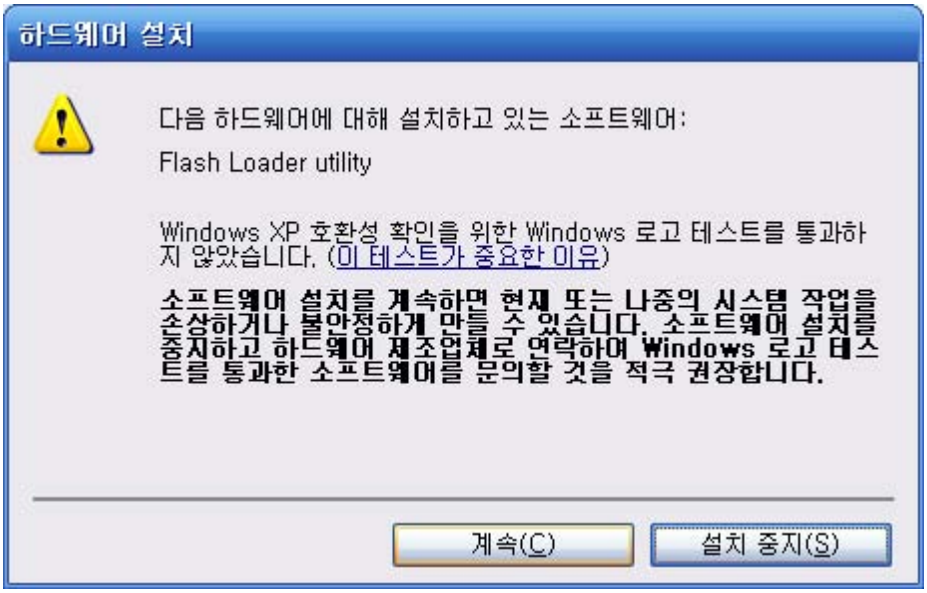

SAMSUNG Proprietary-Contents may change without notice
This Document can not be used without Samsung's authorization

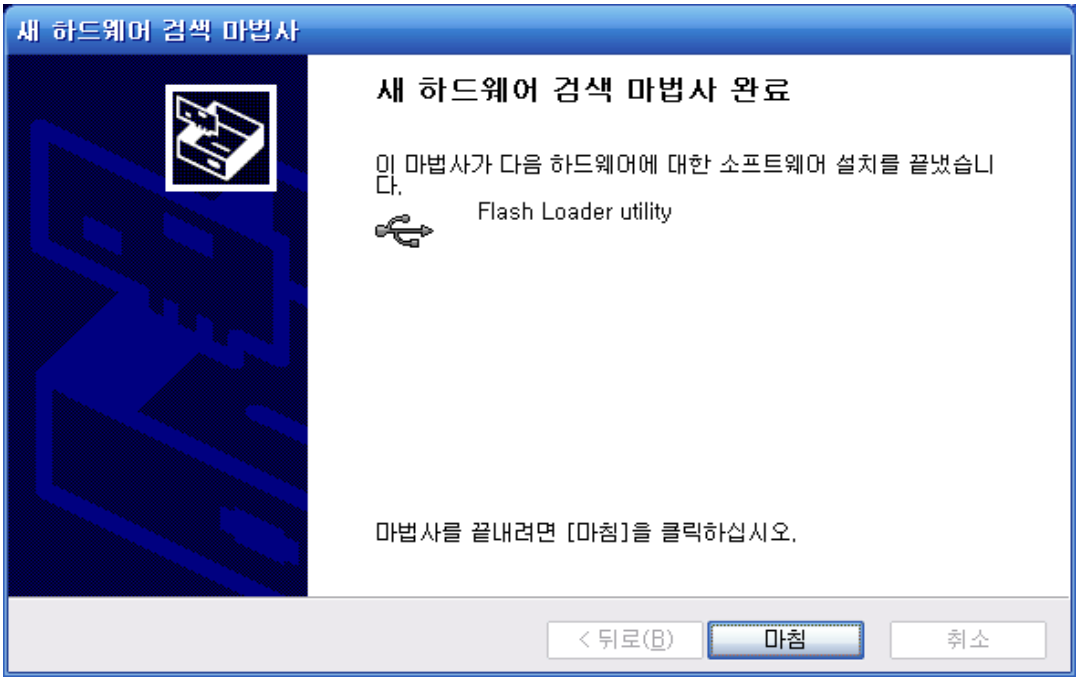

4-3-3 Complete Downloading

- When you finish to set up all drivers, you DO Step 3.1 again. (If the computer still cannot find the drivers or cannot download, try again after rebooting.)

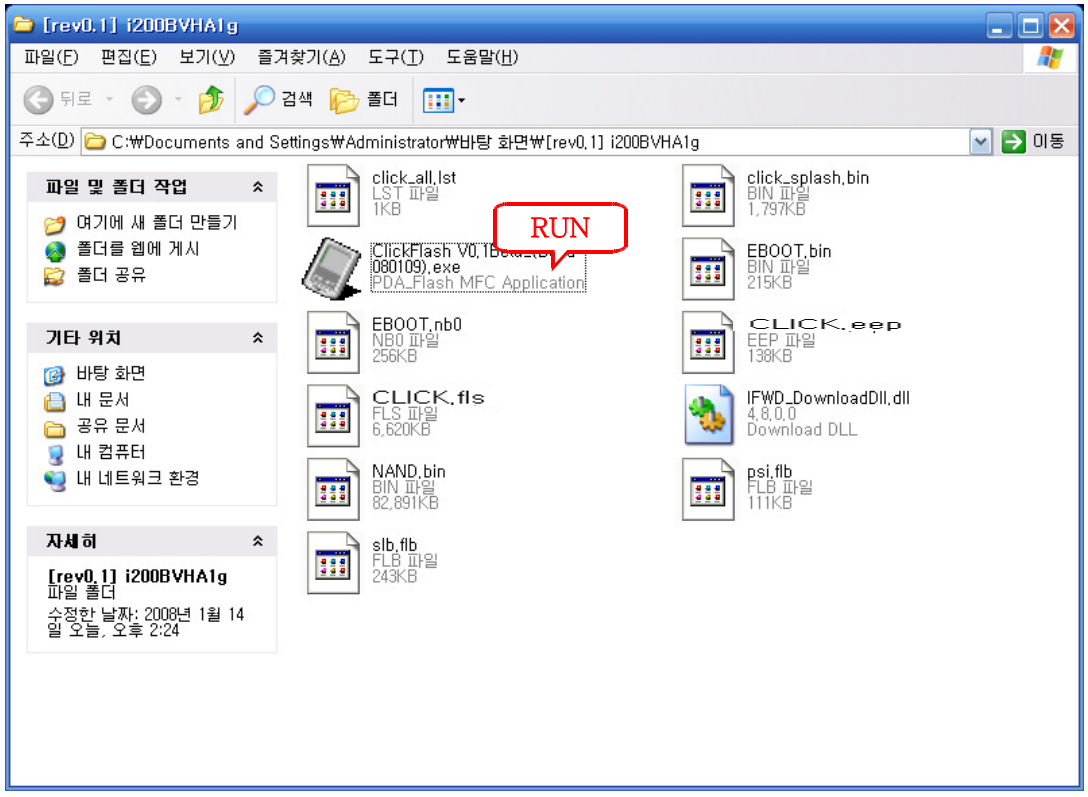

SAMSUNG Proprietary-Contents may change without notice
This Document can not be used without Samsung's authorization

- Hold the BACK Key (Soft 2 Key) and Power ON
- Click the Download Start button after booting

SAMSUNG Proprietary-Contents may change without notice
This Document can not be used without Samsung's authorization

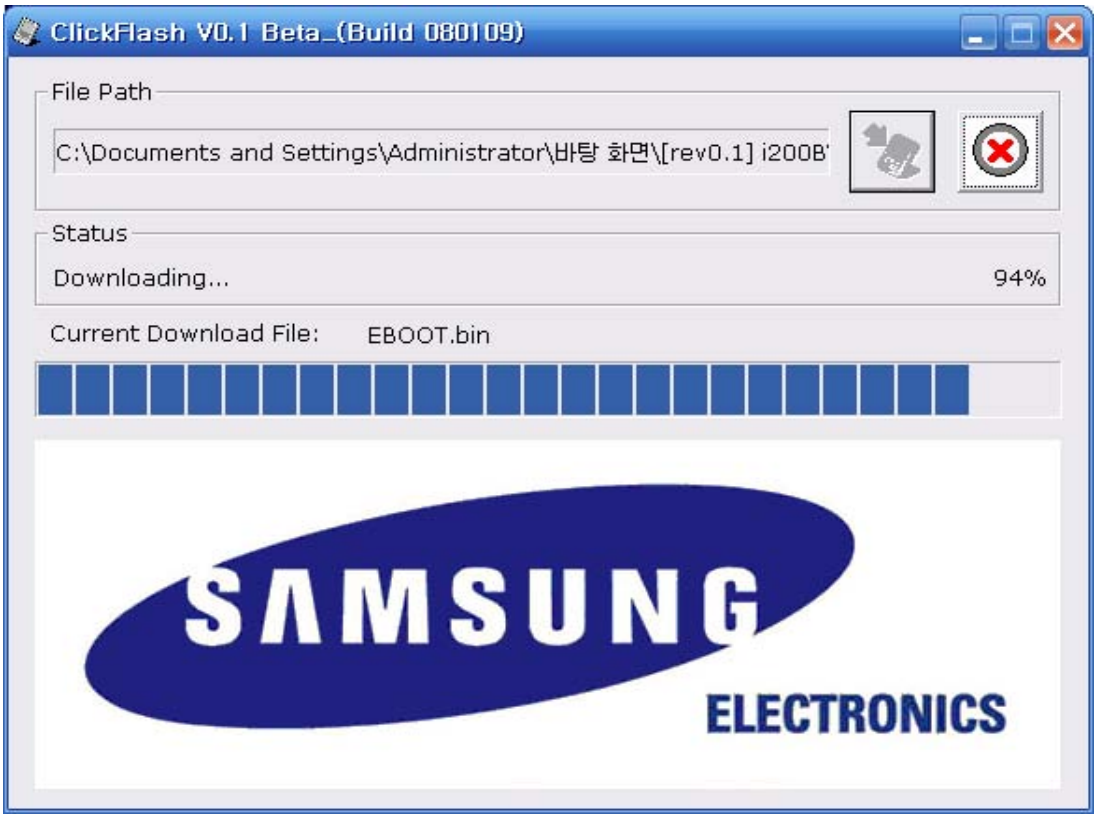

SAMSUNG Proprietary-Contents may change without notice
This Document can not be used without Samsung's authorization

SAMSUNG Proprietary-Contents may change without notice
This Document can not be used without Samsung's authorization

8. Block Diagrams

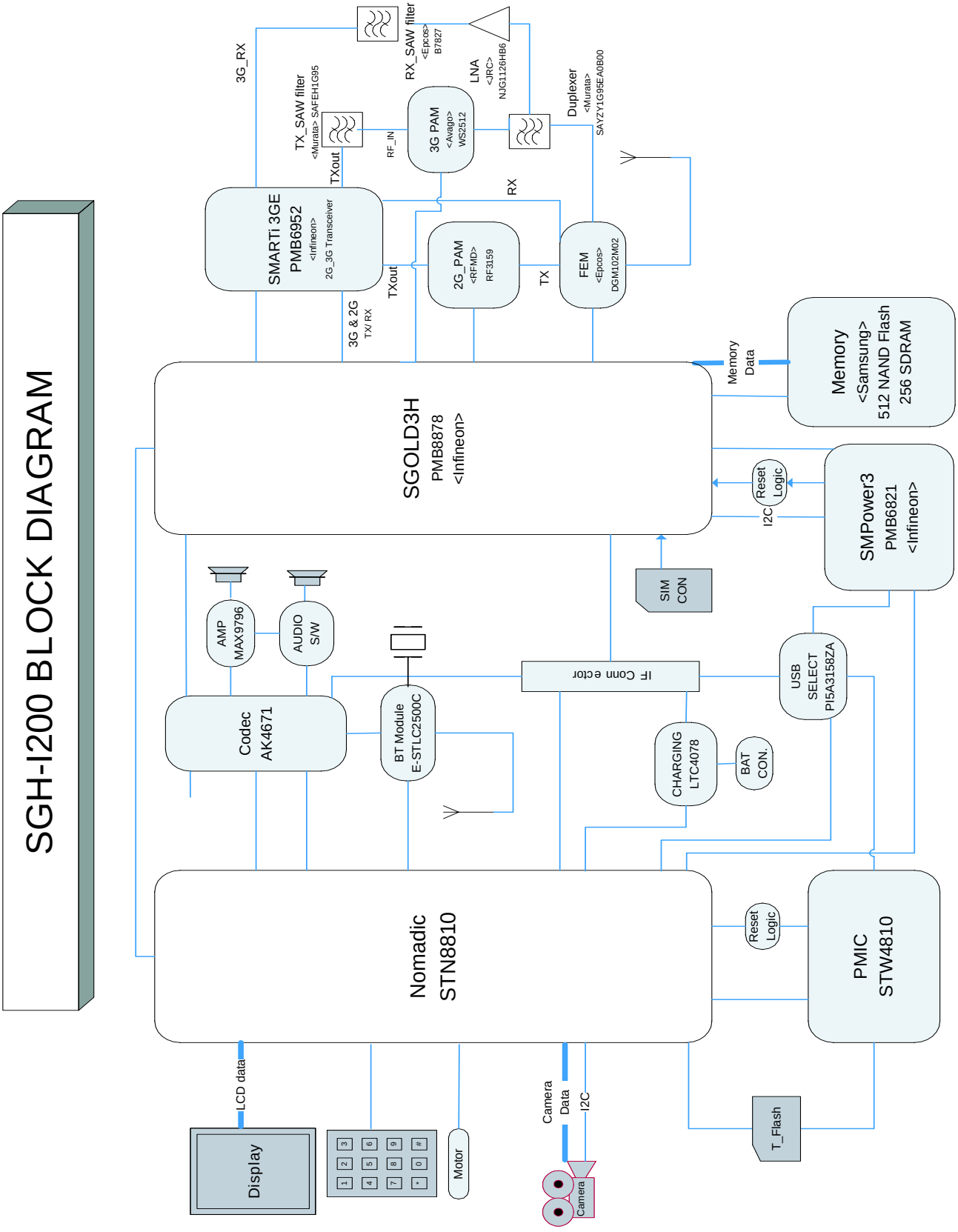

SAMSUNG Proprietary-Contents may change without notice
This Document can not be used without Samsung's authorization

9. PCB Diagrams

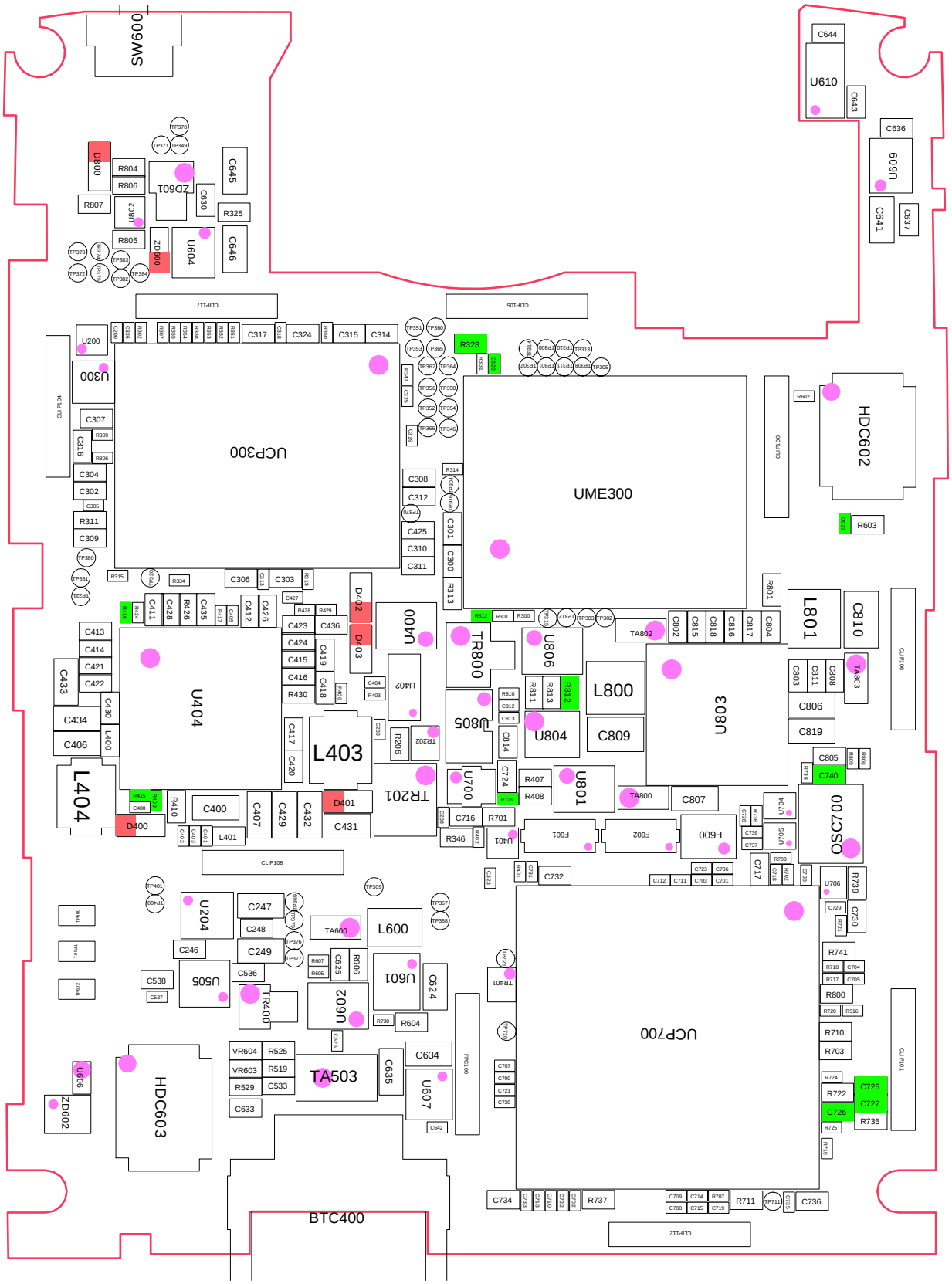
SW600
U610
C644
C643
C636
U609
C641
C637
C645
C630
R325
C646
D800
R804
R806
R807
R805
ZD601
U602
ZD600
U604
U200
U300
UCP300
UME300
HDC602
R603
C307
C316
C304
C302
R311
C309
C308
C312
C425
C310
C311
C301
C300
R313
R328
R801
L801
C810
C802
C815
C818
C816
C817
C804
TA802
C803
C808
C811
C806
C819
C805
C740
U704
U705
OSC700
C739
C737
C717
U706
R739
C730
C726
R741
R800
R710
R703
C725
C727
R722
C726
R735
R725
U404
C413
C414
C421
C422
C433
C430
C434
C406
L400
L404
D400
C400
C407
C429
C432
C431
L401
L403
C417
C420
C423
C436
C424
C415
C416
C419
C418
R430
R428
R429
C427
D402
D403
U400
U402
TR800
U805
U806
U804
L800
C809
C814
C813
C812
R810
R811
R813
R812
TR802
R206
TR201
D401
U700
C724
R729
R407
R408
U801
C716
R701
R346
U401
F601
F602
F600
C732
C723
C706
C712
C711
C703
C701
C738
R702
R700
C731
R401
C729
C728
R728

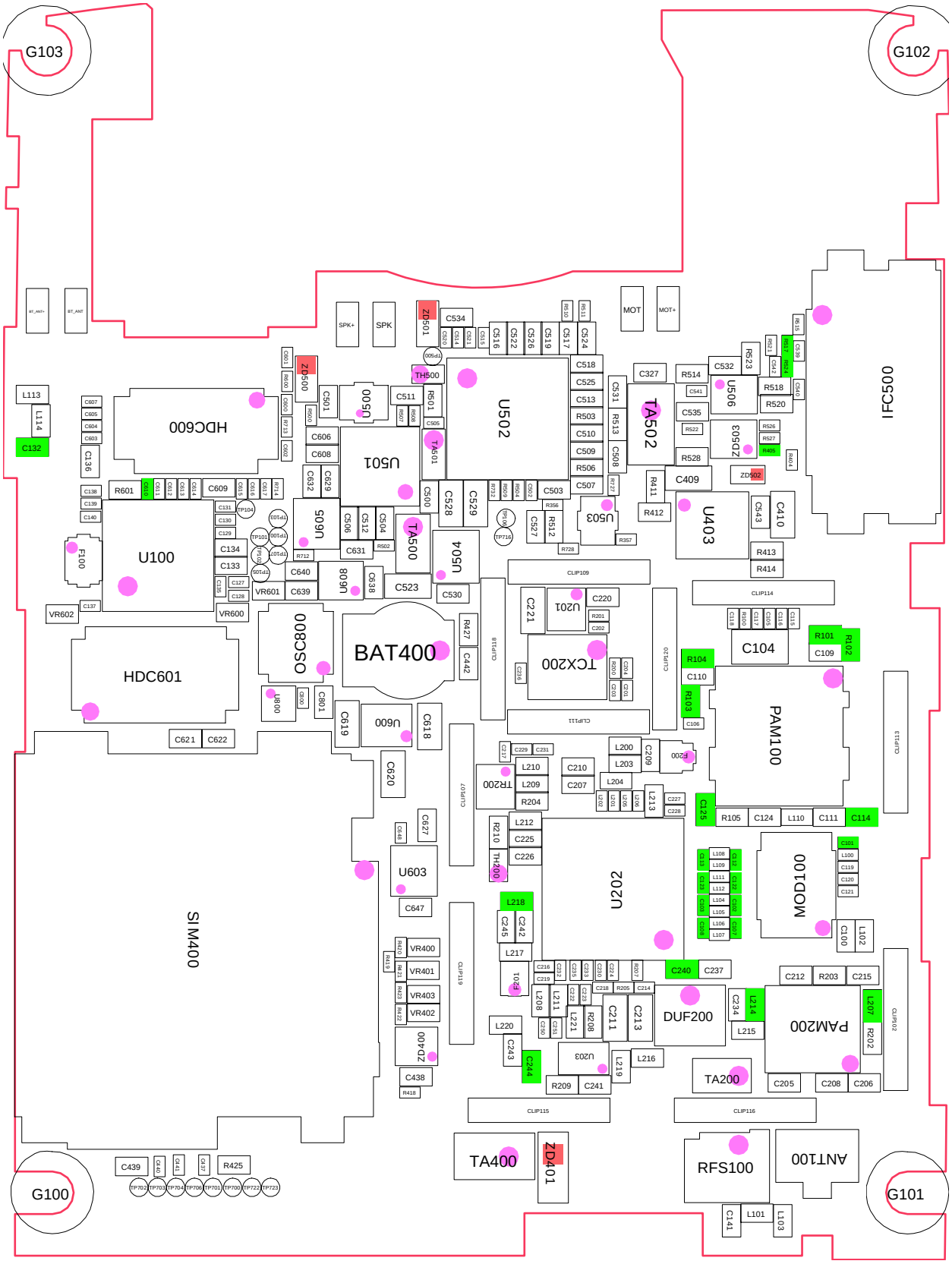

SAMSUNG Proprietary-Contents may change without notice
This Document can not be used without Samsung's authorization

3. Product Function

Main Function

- Windows Mobile
- Music Player
- Bluetooth
- Email
- SMS/MMS
- Internet Explorer
- Camera and Camcorder
- Video Telephony

SAMSUNG Proprietary-Contents may change without notice
This Document can not be used without Samsung's authorization

11. Reference data

11-1. Reference Abbreviate

AAC: Advanced Audio Coding.
AVC : Advanced Video Coding.
BER : Bit Error Rate
BPSK: Binary Phase Shift Keying
CA : Conditional Access
CDM : Code Division Multiplexing
C/I : Carrier to Interference
DMB : Digital Multimedia Broadcasting
EN **:** European Standard
ES **:** Elementary Stream
ETSI: European Telecommunications Standards Institute
MPEG: Moving Picture Experts Group
PN : Pseudo-random Noise
PS : Pilot Symbol
QPSK: Quadrature Phase Shift Keying
RS : Reed-Solomon
SI : Service Information
TDM : Time Division Multiplexing
TS **:** Transport Stream

SAMSUNG Proprietary-Contents may change without notice
This Document can not be used without Samsung's authorization

1. Safety Precautions

1-1. Repair Precaution

- Repair in Shield Box, during detailed tuning.
  Take specially care of tuning or test,
  because specipicty of cellular phone is sensitive for surrounding interference(RF noise).

- Be careful to use a kind of magnetic object or tool,
  because performance of parts is damaged by the influence of manetic force.

- Surely use a standard screwdriver when you disassemble this product,
  otherwise screw will be worn away.

- Use a thicken twisted wire when you measure level.
  A thicken twisted wire has low resistance, therefore error of measurement is few.

- Repair after separate Test Pack and Set because for short danger (for example an overcurrent and furious flames of parts etc) when you repair board in condition of connecting Test Pack and tuning on.

- Take specially care of soldering, because Land of PCB is small and weak in heat.

- Surely tune on/off while using AC power plug, because a repair of battery charger is dangerous when tuning ON/OFF PBA and Connector after disassembing charger.

- Don't use as you pleases after change other material than replacement registered on SEC System.
  Otherwise engineer in charge isn't charged with problem that you don't keep this rules.

SAMSUNG Proprietary-Contents may change without notice
This Document can not be used without Samsung's authorization

1-2. ESD(Electrostatically Sensitive Devices) Precaution

Several semiconductor may be damaged easilly by static electricity. Such parts are called by ESD(Electrostatically Sensitive Devices), for example IC,BGA chip etc. Read Precaution below. You can prevent from ESD damage by static electricity.

- Remove static electricity remained your body before you touch semiconductor or parts with semiconductor. There are ways that you touch an earthed place or wear static electricity prevention string on wrist.

- Use earthed soldering steel when you connect or disconnect ESD.

- Use soldering removing tool to break static electricity. , otherwise ESD will be damaged by static electricity.

- Don't unpack until you set up ESD on product. Because most of ESD are packed by box and aluminum plate to have conductive power,they are prevented from static electricity.

- You must maintain electric contact between ESD and place due to be set up until ESD is connected completely to the proper place or a circuit board.

SAMSUNG Proprietary-Contents may change without notice
This Document can not be used without Samsung's authorization

6. MAIN Electrical Parts List

SEC CODE	Design LOC	Discription
0401-001110	D800	DIODE-SWITCHING
0403-001547	ZD401	DIODE-ZENER
0404-001172	D400	DIODE-SCHOTTKY
0404-001172	D401	DIODE-SCHOTTKY
0404-001172	D402	DIODE-SCHOTTKY
0404-001172	D403	DIODE-SCHOTTKY
0406-001150	ZD500	DIODE-TVS
0406-001150	ZD501	DIODE-TVS
0406-001167	U506	DIODE-TVS
0406-001167	ZD503	DIODE-TVS
0406-001167	ZD602	DIODE-TVS
0406-001190	ZD400	DIODE-TVS
0406-001210	ZD600	DIODE-TVS
0406-001231	ZD502	DIODE-TVS
0407-000115	ZD601	DIODE-ARRAY
0407-001038	U400	DIODE-ARRAY
0501-002202	TR400	TR-SMALL SIGNAL
0504-001113	TR202	TR-DIGITAL
0504-001113	TR401	TR-DIGITAL
0504-001151	TR200	TR-DIGITAL
0505-001165	TR201	FET-SILICON
0505-001217	TR800	FET-GAAS
0801-000794	U806	IC-CMOS LOGIG
0801-002765	U801	IC-CMOS LOGIG
0801-002896	U602	IC-CMOS LOGIG
0801-002995	U802	IC-CMOS LOGIG
0801-003013	U300	IC-CMOS LOGIG
0801-003016	U401	IC-CMOS LOGIG
0801-003024	U706	IC-CMOS LOGIG
0801-003031	U200	IC-CMOS LOGIG
0801-003130	U800	IC-CMOS LOGIG
0801-003213	U704,U705	IC-CMOS LOGIG
0902-002238	UCP700	IC-MICROPROCESSOR
1001-001221	U402	IC-ANALOG SWITCH
1001-001410	U500	IC-ANALOG SWITCH
1001-001428	U503	IC-ANALOG MULTIPLEX
1003-002132	U700	IC-LEVEL DRIVER

SAMSUNG Proprietary-Contents may change without notice
This Document can not be used without Samsung's authorization

SEC CODE	Design LOC	Discription
1108-000057	UME300	IC-MCP
1201-002423	PAM100	IC-POWER AMP
1201-002455	PAM200	IC-POWER AMP
1201-002559	U203	IC-MMIC AMP
1201-002692	U501	IC-AUDIO AMP
1203-002999	U804	IC-VOL . DETECTOR
1203-003253	U805	IC-BATTERY
1203-003531	U604	IC-POSI.FIXED REG.
1203-003643	U600	IC-MULTI REG.
1203-003787	U201	IC-POSI.FIXED REG.
1203-004172	U601	IC-DC/DC CONVERTER
1203-004395	U607	IC-POSI.FIXED REG.
1203-004435	U504	IC-MULTI REG.
1203-004458	U505,U603	IC-POSI.FIXED REG.
1203-004460	U204	IC-MULTI REG.
1203-004507	U605	IC-POSI.FIXED REG.
1203-004606	U609	IC-MULTI REG.
1203-004838	U403	IC-BATTERY
1203-004898	U803	IC-POWER SUPERVISOR
1203-004906	U404	IC-BATTERY
1203-004948	U608	IC-MULTI REG.
1205-003099	U202	IC-TRANSCEIVER
1205-003322	U100	IC-TRANSCEIVER
1205-003325	UCP300	IC-DATA COMM./GEN.
1205-003488	U502	IC-CODEC
1209-001748	U610	IC-SENSOR
1404-001165	TH200	THERMISTOR-NTC
1404-001221	TH500	THERMISTOR-NTC
1405-001093	VR400,VR401,VR402	VARISTOR
1405-001093	VR403,VR603,VR604	VARISTOR
1405-001133	VR600,VR601,VR602	VARISTOR
2007-000138	R512	R-CHIP
2007-000139	R513	R-CHIP
2007-000140	R528	R-CHIP
2007-000148	R203,R414,R801	R-CHIP
2007-000157	R410,R737,R739	R-CHIP
2007-000162	R407,R408,R701,R800	R-CHIP

SAMSUNG Proprietary-Contents may change without notice
This Document can not be used without Samsung's authorization

SEC CODE	Design LOC	Discription
2007-000162	R805,R811	R-CHIP
2007-000165	R806	R-CHIP
2007-000167	R325	R-CHIP
2007-000170	R206	R-CHIP
2007-000171	R105,R202,R313,R430	R-CHIP
2007-000171	R601,R603,R703,R722	R-CHIP
2007-000171	R735,R807	R-CHIP
2007-000242	R346	R-CHIP
2007-000566	R813	R-CHIP
2007-001119	R519	R-CHIP
2007-001156	R412	R-CHIP
2007-001316	R208	R-CHIP
2007-003006	R518,R520	R-CHIP
2007-007107	R210,R426,R741,R804	R-CHIP
2007-007135	R710,R711	R-CHIP
2007-007136	R425	R-CHIP
2007-007139	R501	R-CHIP
2007-007142	R427,R503	R-CHIP
2007-007306	R209	R-CHIP
2007-007308	R606	R-CHIP
2007-007311	R311	R-CHIP
2007-007313	R506	R-CHIP
2007-007316	R411	R-CHIP
2007-007317	R529	R-CHIP
2007-007528	R514,R523,R525	R-CHIP
2007-007588	R413	R-CHIP
2007-007741	R605	R-CHIP
2007-007798	R204,R604	R-CHIP
2007-008045	R403,R500	R-CHIP
2007-008051	R314,R334	R-CHIP
2007-008052	R315,R338,R354,R355	R-CHIP
2007-008052	R504,R717,R718,R808	R-CHIP
2007-008052	R809	R-CHIP
2007-008055	R331,R418,R419,R420	R-CHIP
2007-008055	R421,R422,R423,R424	R-CHIP
2007-008055	R428,R429	R-CHIP
2007-008211	R200	R-CHIP

SAMSUNG Proprietary-Contents may change without notice
This Document can not be used without Samsung's authorization

SEC CODE	Design LOC	Discription
2007-008419	R100,R402	R-CHIP
2007-008478	R347	R-CHIP
2007-008483	R607	R-CHIP
2007-008516	R201,R401,R502,R712	R-CHIP
2007-008516	R720	R-CHIP
2007-008531	R700	R-CHIP
2007-008542	R207,R302,R306,R307	R-CHIP
2007-008542	R309,R351,R352,R353	R-CHIP
2007-008542	R356,R357,R404,R406	R-CHIP
2007-008542	R417,R509,R515,R600	R-CHIP
2007-008542	R602,R702,R719,R721	R-CHIP
2007-008542	R724,R725,R727,R728	R-CHIP
2007-008542	R730,R732,R736,R738	R-CHIP
2007-008648	R350	R-CHIP
2007-009111	R300,R301,R319	R-CHIP
2007-009112	R707	R-CHIP
2007-009154	R510,R511	R-CHIP
2007-009157	R507,R508	R-CHIP
2007-009170	R516	R-CHIP
2007-009182	R810	R-CHIP
2007-009212	R521,R522,R526,R527	R-CHIP
2007-009315	R205	R-CHIP
2007-009408	R713,R714	R-CHIP
2203-000233	C205,C327	C-CER,CHIP
2203-000254	C246	C-CER,CHIP
2203-000386	C225	C-CER,CHIP
2203-000438	C206,C212,C215	C-CER,CHIP
2203-000627	C241	C-CER,CHIP
2203-000812	C100,C109,C110,C531	C-CER,CHIP
2203-000812	C532,C533,C534	C-CER,CHIP
2203-000854	C606,C608,C609,C633	C-CER,CHIP
2203-000854	U606	C-CER,CHIP
2203-001072	C242,C245	C-CER,CHIP
2203-001153	C237,C243	C-CER,CHIP
2203-001405	C535	C-CER,CHIP
2203-002709	C801,C802,C811,C814	C-CER,CHIP
2203-002709	C815	C-CER,CHIP

SAMSUNG Proprietary-Contents may change without notice
This Document can not be used without Samsung's authorization

SEC CODE	Design LOC	Discription
2203-005053	C210	C-CER,CHIP
2203-005234	C124,C234	C-CER,CHIP
2203-005288	C141,C209	C-CER,CHIP
2203-005446	C111	C-CER,CHIP
2203-005482	C420,C428,C436,C716	C-CER,CHIP
2203-005682	C437,C440,C539	C-CER,CHIP
2203-005682	C540,C600,C601,C602	C-CER,CHIP
2203-005682	C603,C604,C605,C607	C-CER,CHIP
2203-005682	C611,C612,C613,C614	C-CER,CHIP
2203-005682	C615,C616,C617	C-CER,CHIP
2203-005683	C541,C542	C-CER,CHIP
2203-005717	C106,C115,C116,C117	C-CER,CHIP
2203-005725	C119,C120,C121,C319	C-CER,CHIP
2203-005727	C251	C-CER,CHIP
2203-005729	C217,C219,C227,C441	C-CER,CHIP
2203-005736	C203,C729,C731,C733	C-CER,CHIP
2203-005736	C735	C-CER,CHIP
2203-005806	C201,C235,C236	C-CER,CHIP
2203-005808	C105	C-CER,CHIP
2203-005968	C508	C-CER,CHIP
2203-006048	C500,C509,C530,C630	C-CER,CHIP
2203-006048	C632	C-CER,CHIP
2203-006121	C642	C-CER,CHIP
2203-006137	C517,C524	C-CER,CHIP
2203-006187	C230	C-CER,CHIP
2203-006194	C202	C-CER,CHIP
2203-006208	C528,C529,C619,C620	C-CER,CHIP
2203-006257	C442,C625,C805	C-CER,CHIP
2203-006260	C133,C134,C136,C226	C-CER,CHIP
2203-006260	C300,C302,C306,C315	C-CER,CHIP
2203-006260	C324,C421,C423,C426	C-CER,CHIP
2203-006260	C507,C518,C525	C-CER,CHIP
2203-006324	C221,C618,C635,C641	C-CER,CHIP
2203-006324	C806,C807	C-CER,CHIP
2203-006348	C409,C410,C624	C-CER,CHIP
2203-006423	C127,C128,C129,C130	C-CER,CHIP
2203-006423	C131,C200,C204,C218	C-CER,CHIP

SAMSUNG Proprietary-Contents may change without notice
This Document can not be used without Samsung's authorization

SEC CODE	Design LOC	Discription
2203-006423	C222,C223,C228,C229	C-CER,CHIP
2203-006423	C231,C232,C233,C239	C-CER,CHIP
2203-006423	C318,C326,C404,C408	C-CER,CHIP
2203-006423	C427,C502,C505,C514	C-CER,CHIP
2203-006423	C515,C520,C521,C626	C-CER,CHIP
2203-006423	C700,C701,C702,C703	C-CER,CHIP
2203-006423	C704,C705,C706,C707	C-CER,CHIP
2203-006423	C708,C709,C710,C711	C-CER,CHIP
2203-006423	C712,C713,C714,C715	C-CER,CHIP
2203-006423	C719,C720,C721,C722	C-CER,CHIP
2203-006423	C723,C728,C737,C738	C-CER,CHIP
2203-006423	C800	C-CER,CHIP
2203-006562	C208,C220,C248,C301	C-CER,CHIP
2203-006562	C303,C304,C307,C308	C-CER,CHIP
2203-006562	C309,C310,C311,C312	C-CER,CHIP
2203-006562	C314,C316,C317,C417	C-CER,CHIP
2203-006562	C418,C419,C422,C425	C-CER,CHIP
2203-006562	C430,C438,C439,C717	C-CER,CHIP
2203-006562	C803,C804,C808,C816	C-CER,CHIP
2203-006562	C817,C818	C-CER,CHIP
2203-006626	C511,C730,C732,C734	C-CER,CHIP
2203-006626	C736	C-CER,CHIP
2203-006647	C214	C-CER,CHIP
2203-006648	C305,C313	C-CER,CHIP
2203-006668	C118	C-CER,CHIP
2203-006681	C207,C527,C543,C724	C-CER,CHIP
2203-006712	C323,C325	C-CER,CHIP
2203-006824	C523,C634,C819	C-CER,CHIP
2203-006825	C211,C213,C247,C249	C-CER,CHIP
2203-006825	C429,C431,C432,C433	C-CER,CHIP
2203-006825	C434	C-CER,CHIP
2203-006838	C412,C413,C414,C415	C-CER,CHIP
2203-006838	C416,C424,C503,C510	C-CER,CHIP
2203-006838	C538,C627	C-CER,CHIP
2203-006839	C238,C250,C401,C405	C-CER,CHIP
2203-006839	C537,C648,C812,C813	C-CER,CHIP
2203-006841	C411,C435,C501,C504	C-CER,CHIP

SAMSUNG Proprietary-Contents may change without notice
This Document can not be used without Samsung's authorization

SEC CODE	Design LOC	Discription
2203-006841	C506,C512,C513,C516	C-CER,CHIP
2203-006841	C519,C522,C526,C536	C-CER,CHIP
2203-006841	C621,C622,C629,C631	C-CER,CHIP
2203-006841	C636,C637,C638,C639	C-CER,CHIP
2203-006841	C640,C643,C644,C647	C-CER,CHIP
2203-006896	C718	C-CER,CHIP
2203-006979	C402,C403,C739	C-CER,CHIP
2203-007147	C809,C810	C-CER,CHIP
2203-007210	C135,C137,C138,C139	C-CER,CHIP
2203-007210	C140,C216,C224	C-CER,CHIP
2203-007269	C104	C-CER,CHIP
2203-007270	C400,C406,C407,C645	C-CER,CHIP
2203-007270	C646	C-CER,CHIP
2404-001151	TA502,TA503	C-TA,CHIP
2404-001381	TA501,TA600,TA800	C-TA,CHIP
2404-001381	TA802,TA803	C-TA,CHIP
2404-001406	TA400	C-TA,CHIP
2404-001415	TA500	C-TA,CHIP
2404-001496	TA200	C-TA,CHIP
2703-001178	L113,L216,L217	INDUCTOR-SMD
2703-001733	L103,L220	INDUCTOR-SMD
2703-001750	L101	INDUCTOR-SMD
2703-002205	L200,L203	INDUCTOR-SMD
2703-002281	L219,L221	INDUCTOR-SMD
2703-002314	L102	INDUCTOR-SMD
2703-002368	L114	INDUCTOR-SMD
2703-002369	L215	INDUCTOR-SMD
2703-002558	L204	INDUCTOR-SMD
2703-002649	L100	INDUCTOR-SMD
2703-002768	L404	INDUCTOR-SMD
2703-002793	L104,L105,L106,L107	INDUCTOR-SMD
2703-002795	L202,L206	INDUCTOR-SMD
2703-002815	L110	INDUCTOR-SMD
2703-002824	L600	INDUCTOR-SMD
2703-002901	L108,L109,L111,L112	INDUCTOR-SMD
2703-003125	L201,L205	INDUCTOR-SMD
2703-003378	L403	INDUCTOR-SMD

SAMSUNG Proprietary-Contents may change without notice
This Document can not be used without Samsung's authorization

SEC CODE	Design LOC	Discription
2703-003409	L800,L801	INDUCTOR-SMD
2804-001700	OSC800	OSCILLATOR-CLOCK(32.768KHZ)
2804-001796	OSC700	OSCILLATOR-CLOCK 19.2MHz
2809-001315	TCX200	**OSCILLATOR-VCTCXO 26MHz**
2901-001320	F600	**FILTER-EMI/ESD**
2901-001480	F601,F602	**FILTER-EMI/ESD**
2904-001815	F100	FILTER-SAW
2904-001833	F201	FILTER-SAW
2904-001835	F200	**FILTER-SAW**
2910-000039	DUF200	**DUPLEXER-FBAR**
2911-000108	MOD100	DUPLEXER-FEM
3301-001342	L208,L209,L210,L211	**BEAD-SMD**
3301-001342	L212,L213,L400,L401	**BEAD-SMD**
3404-001303	SW600	SWITCH-TACT
3705-001225	ANT100	CONNECTOR-COAXIAL
3705-001503	RFS100	CONNECTOR-COAXIAL
3708-002222	HDC600	CONNECTOR-FPC/FFC/PIC
3709-001453	SIM400	CONNECTOR-CARD EDGESIM/Micro SD
3710-002499	IFC500	SOCKET-INTERFACE 20pin
3711-005954	HDC602,HDC603	HEADER-BOARD TO BOARD 24pin
3711-006108	BTC400	HEADER-BATTERY
3711-006119	HDC601	HEADER-BOARD TO BOARD 34pin
4302-001184	BAT400	BATTERY-LI(2ND)
GH70-03349A	CLIP100,CLIP101	IPR SHIELD-CAN CLIP
GH70-03349A	CLIP102,CLIP104	IPR SHIELD-CAN CLIP
GH70-03349A	CLIP105,CLIP106	IPR SHIELD-CAN CLIP
GH70-03349A	CLIP107,CLIP108	IPR SHIELD-CAN CLIP
GH70-03349A	CLIP109,CLIP111	IPR SHIELD-CAN CLIP
GH70-03349A	CLIP112,CLIP113	IPR SHIELD-CAN CLIP
GH70-03349A	CLIP114,CLIP115	IPR SHIELD-CAN CLIP
GH70-03349A	CLIP116,CLIP117	IPR SHIELD-CAN CLIP
GH70-03349A	CLIP118,CLIP119	IPR SHIELD-CAN CLIP
GH70-03349A	CLIP120,FPC100	IPR SHIELD-CAN CLIP

Please consult the GSPN website (Samsung Portal) for the most recent version of the product's part list.

SAMSUNG Proprietary-Contents may change without notice
This Document can not be used without Samsung's authorization

www.s-manuals.com