[A5] SM-A500F/DS REV1.0 BOM

2014.10.14.

Samsung Confidential

sheet01 : RF PAM
sheet02 : WTR1605L or WTR1605(TRANCEIVER), BT/WIFI, GPS, NFC
sheet03 : MSM8916 or MSM8216(AP)
sheet04 : PM8916(PMIC),eMCP
sheet05 : AUDIO, SUB PBA CONNECTOR
sheet06 : 5" HD OCTA, CAM PART, SD CARD, MOT
sheet07 : SENSOR, Charger, MUIC

Engineer							
Drawn by							
R&D CHK					TITLE		Size A2
DOC CTRL CHK					SM-A500F(A5 EUR LTE)		
MFG ENGR CHK							
QA CHK					REV	Drawing Number	Sheet 0/8
Changed by	Date Changed						

<TOP>

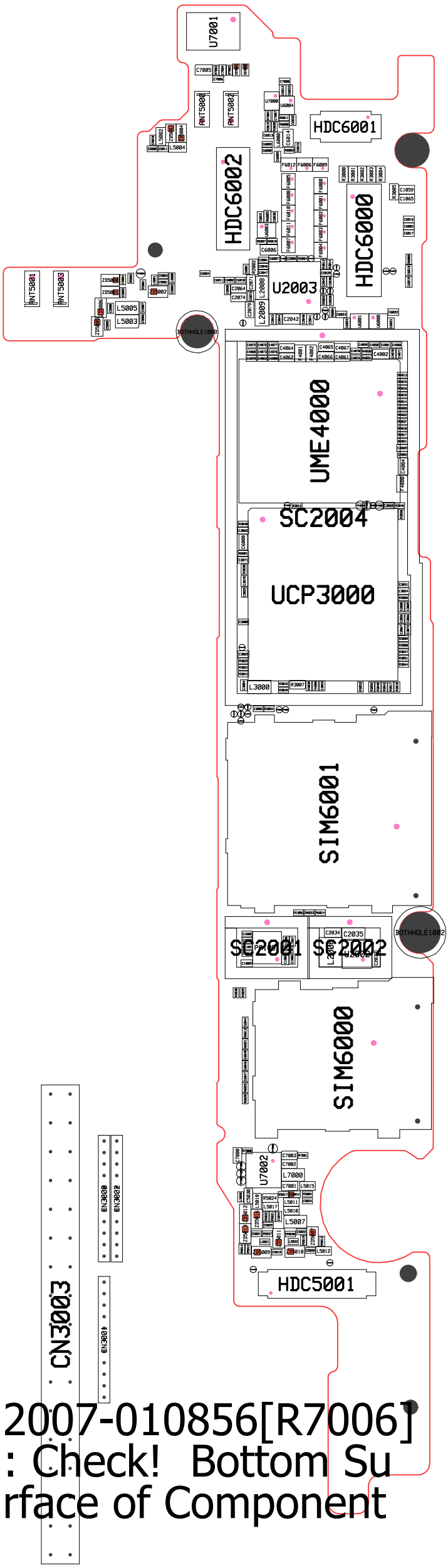

	○			

	○			

	○			

	○			

	○			

	⊖			

	○			

	○			

	○			

	○			

	◍			
	⊕			
	◎			
	□			
	⊠			
	⊞			
	+			

2007-010856[R7006]
: Check! Bottom Su
rface of Component

			○	

			○	

			○	

			○	

			○	

			⊖	

			○	

			○	

			○	

			○	

			◐	
			⊕	
			◎	
			□	
			⊠	
			⊞	
			+	

<Bottom>

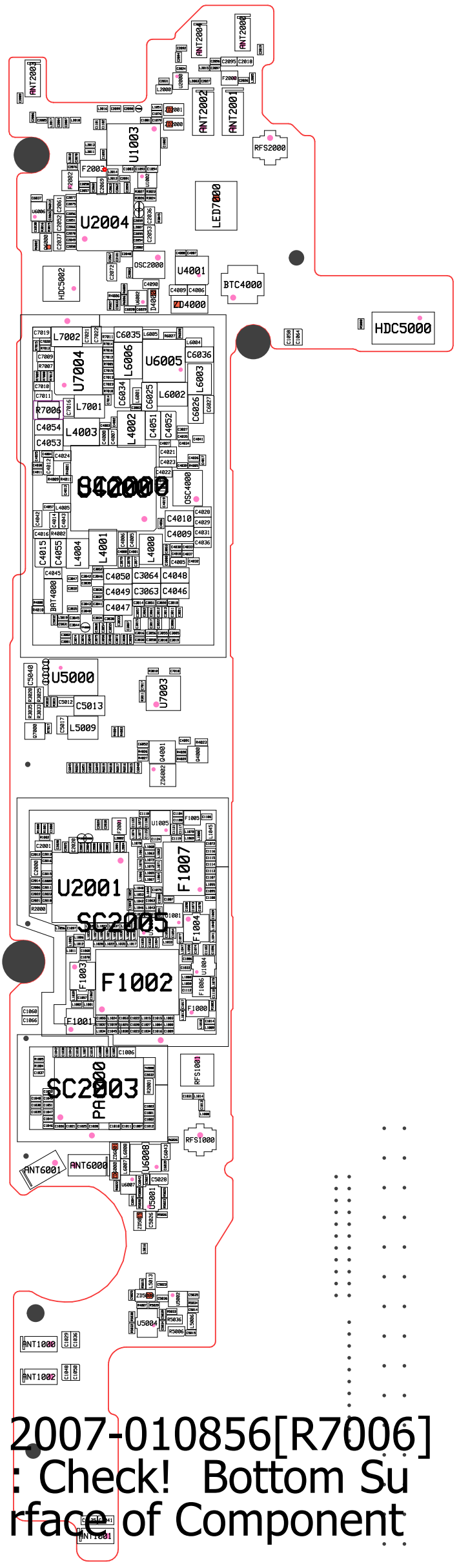

2007-010856[R7006] : Check! Bottom Surface of Component

SAMSUNG CONFIDENTIAL
THIS DOCUMENT CONTAINS CONFIDENTIAL
PROPRIETARY INFORMATION THAT IS
SAMSUNG ELECTRONICS CO'S PROPERTY.
DO NOT DISCLOSE TO OR DUPLICATE FOR OTHERS
EXCEPT AS AUTHORIZED BY SAMSUNG.

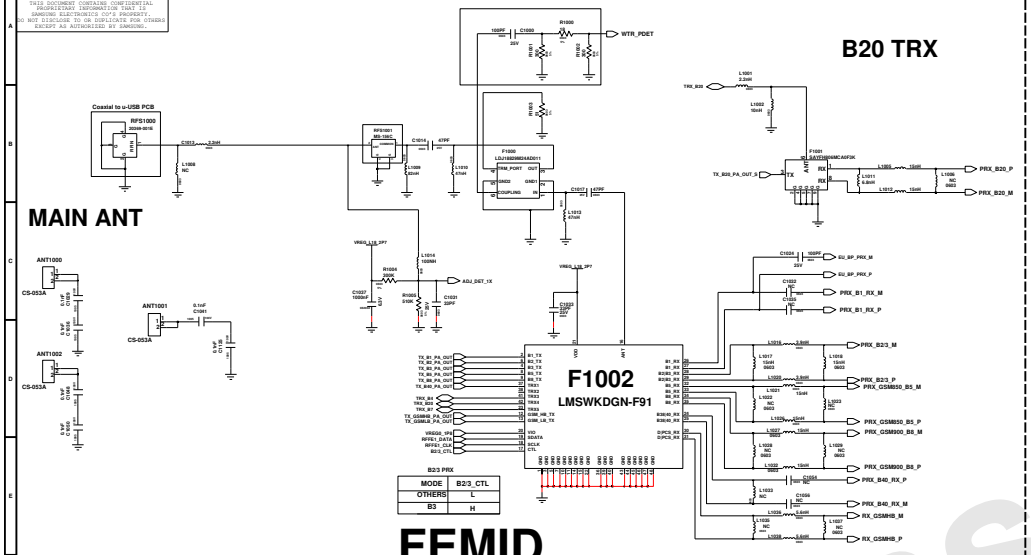

B2/3 PRX	
MODE	B2/3_CTL
OTHERS	L
B3	H

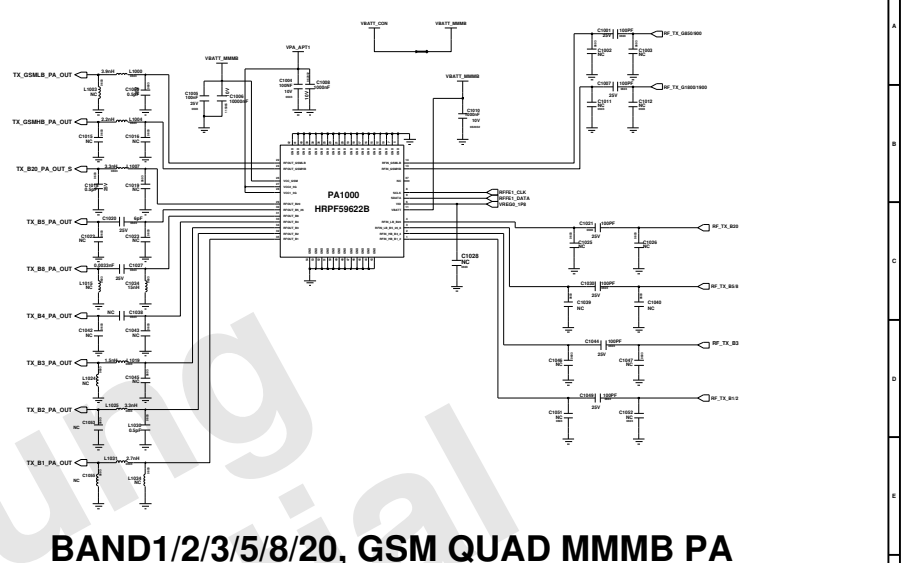

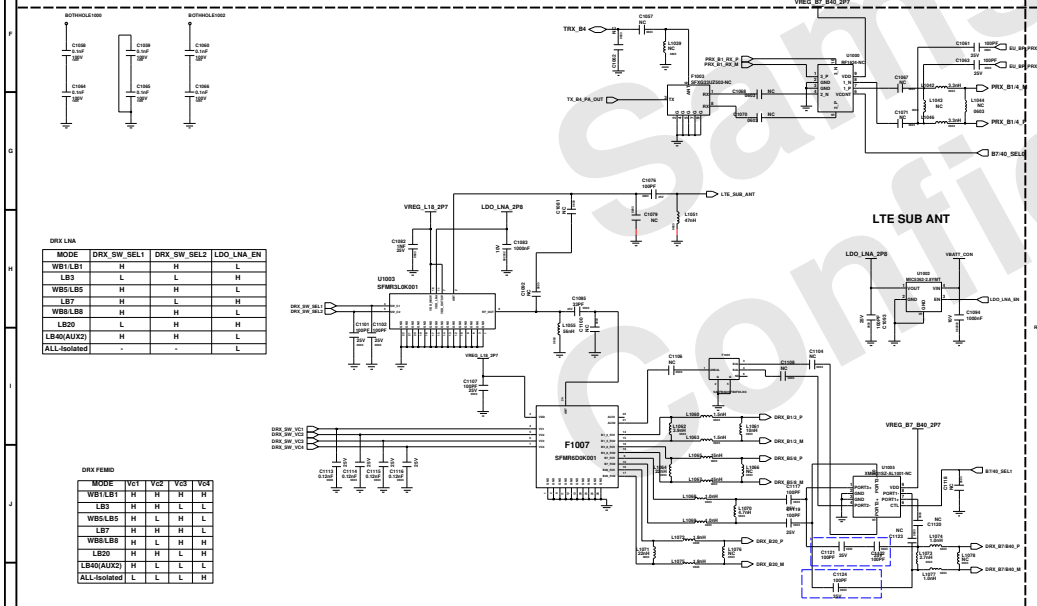

DRX LNA

MODE	DRX_SW_SEL1	DRX_SW_SEL2	LDO_LNA_EN
WB1/LB1	H	H	L
LB3	L	L	H
WB5/LB5	H	H	L
LB7	H	L	H
WB8/LB8	H	H	L
LB20	L	H	H
LB40(AUX2)	H	H	L
ALL-Isolated	-	-	L

DRX FEMID

MODE	Vc1	Vc2	Vc3	Vc4
WB1/LB1	H	H	H	H
LB3	H	H	L	L
WB5/LB5	H	L	H	L
LB7	H	H	H	L
WB8/LB8	H	L	H	H
LB20	H	H	L	H
LB40(AUX2)	H	L	L	L
ALL-Isolated	L	L	L	H

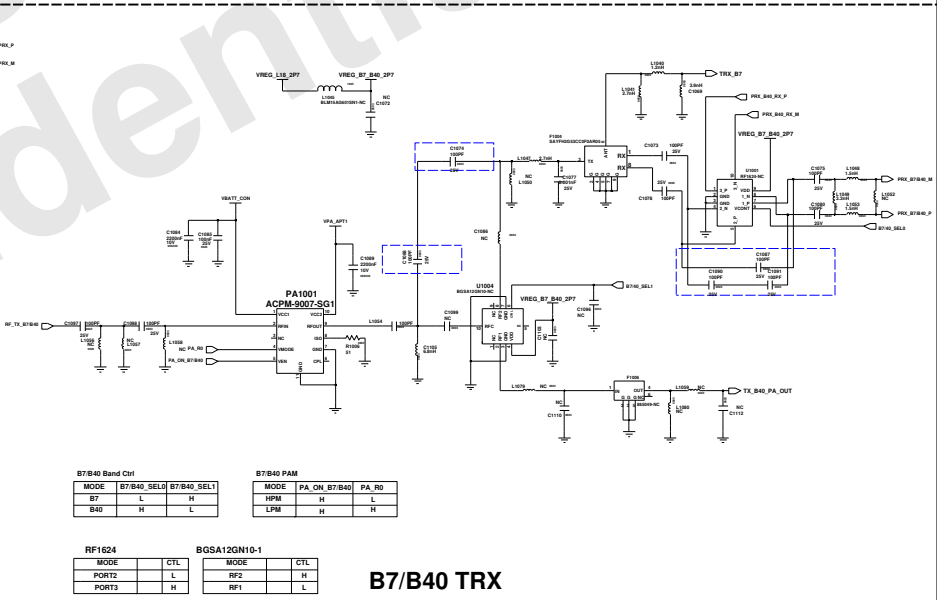

B7/B40 Band Ctrl

MODE	B7/B40_SEL0	B7/B40_SEL1
B7	L	H
B40	H	L

B7/B40 PAM

MODE	PA_ON_B7/B40	PA_R0
HPM	H	L
LPM	H	H

RF1624

MODE	CTL
PORT2	L
PORT3	H

BGSA12GN10-1

MODE	CTL
RF2	H
RF1	L

Engineer	AUDIO / MOTOR / KEY
Drawn by:	
HSD CHK:	TITLE: SM-A500F(A5 EUR LTE)
DOC CTRL CHK:	
MFG ENGR CHK:	
Drawing Number	6/8

Changed by: Date Changed: Time Changed: QA CHK:

Samsung Confidential

SAMSUNG CONFIDENTIAL
THIS DOCUMENT CONTAINS CONFIDENTIAL INFORMATION AND IS THE PROPERTY OF SAMSUNG ELECTRONICS CO.'S PROPERTY. DO NOT DISCLOSE TO OR DUPLICATE FOR OTHERS EXCEPT AS AUTHORISED BY SAMSUNG.

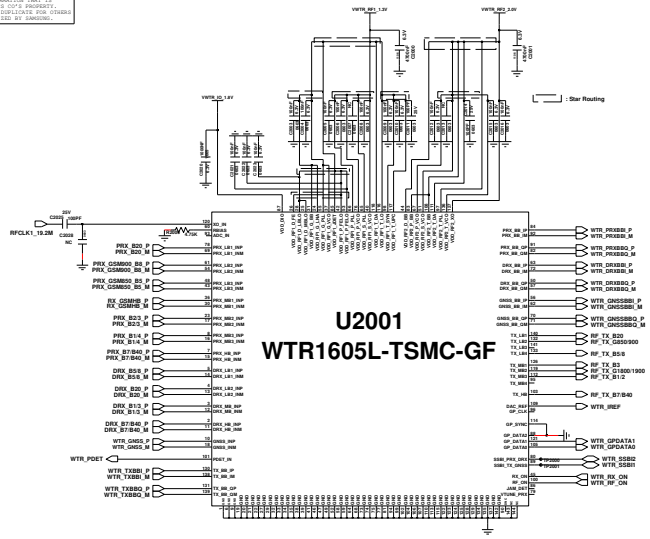

RF Transceiver

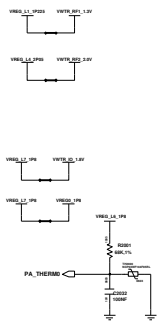

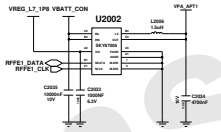

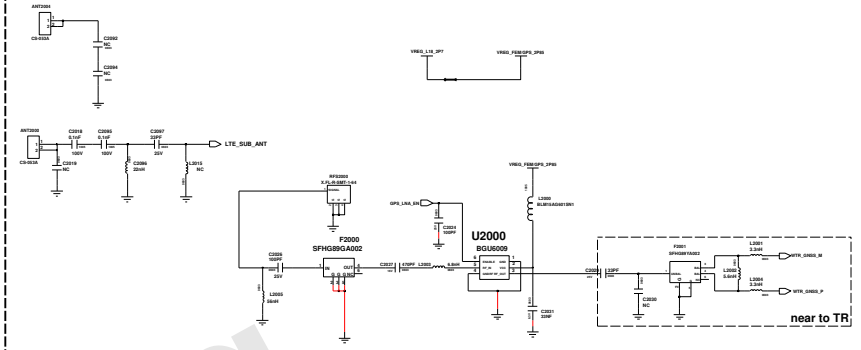

GPS / GNSS

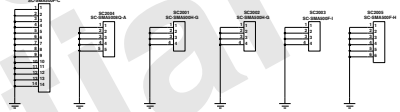

SHIELDCAN

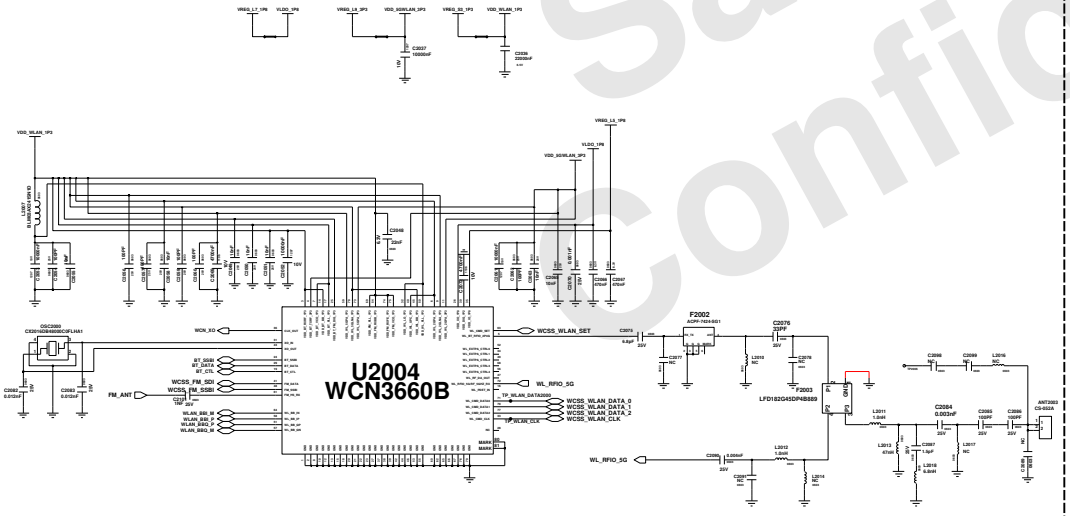

BT/WIFI ANT

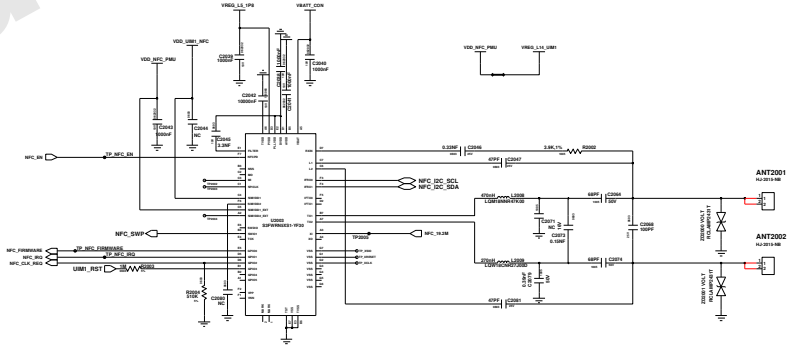

NFC

Engineer	CONNEOCTIVITY
Issued by	
R&D CHK	TITLE: SM-A500F(A5 EUR LTE)
DOC CTRL CHK	
BPG ENGR CHK	
QA CHK	Drawing Number

Samsung Confidential

SAMSUNG CONFIDENTIAL
THIS DOCUMENT CONTAINS CONFIDENTIAL
PROPRIETARY INFORMATION THAT IS
SAMSUNG ELECTRONICS CO'S PROPERTY.
DO NOT DISCLOSE TO OR DUPLICATE FOR OTHERS
EXCEPT AS AUTHORIZED BY SAMSUNG.

AP PART (MSM8916)

A5 Global	SHORT
SM-A500F/DS	E, D
SM-A500F/SS	E
SM-A500G/DS	G, D
SM-A500G/SS	G
SM-A500H/DS	H, D
SM-A500H/SS	H

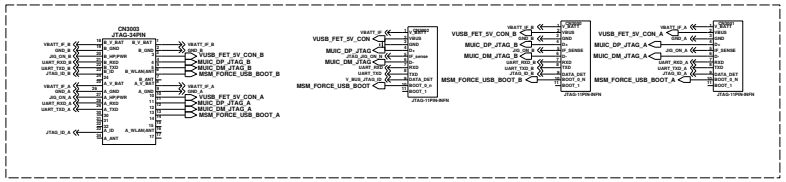
PCB JTAG

Solder Bridge

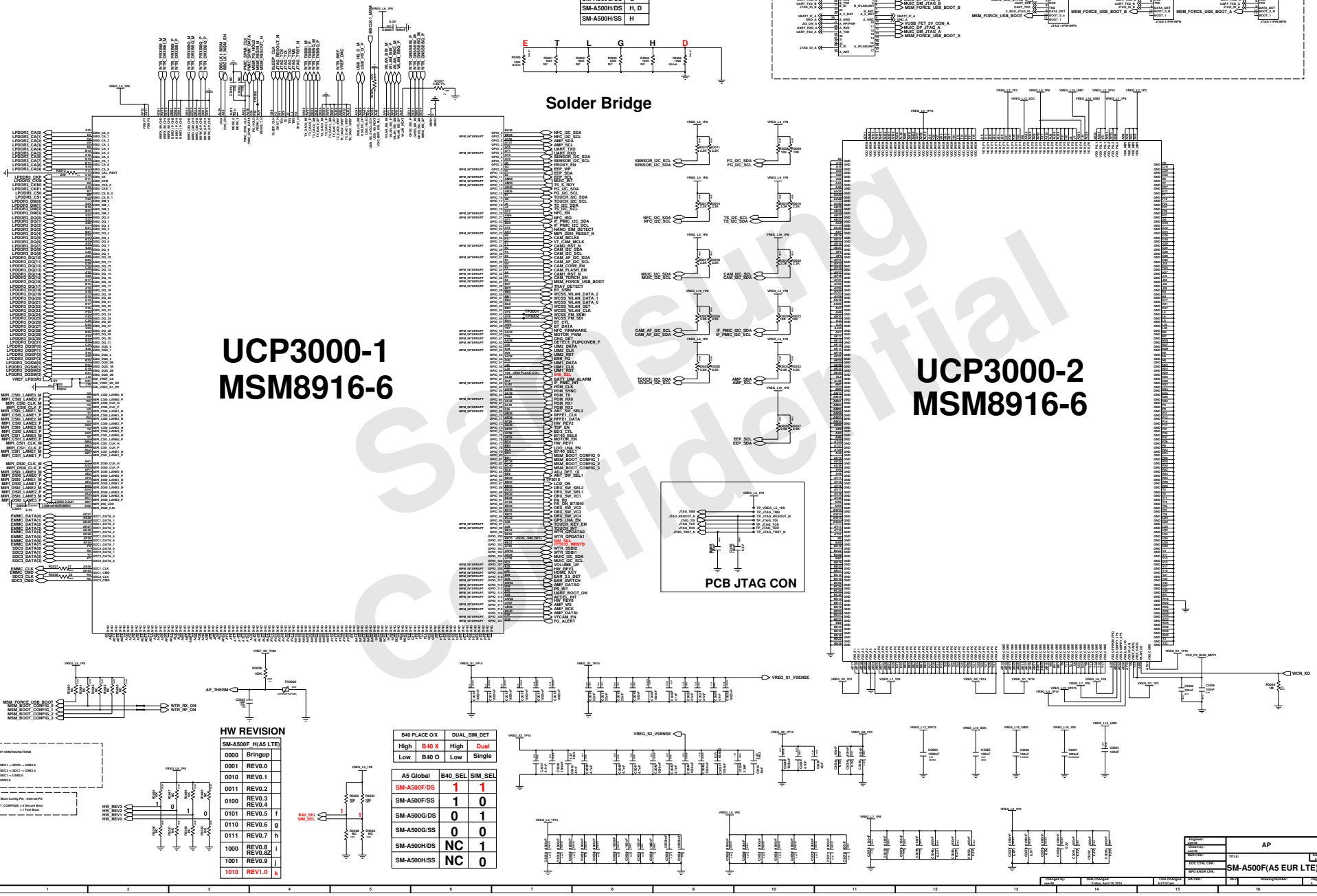
UCP3000-1
MSM8916-6

UCP3000-2
MSM8916-6

PCB JTAG CON

Samsung Confidential

HW REVISION

SM-A500F_H(A5 LTE)		
0000	Bringup	
0001	REV0.0	
0010	REV0.1	
0011	REV0.2	
0100	REV0.3 REV0.4	
0101	REV0.5	f
0110	REV0.6	g
0111	REV0.7	h
1000	REV0.8 REV0.8Z	i
1001	REV0.9	j
1010	REV1.0	k

B40 PLACE O/X		DUAL_SIM_DET	
High	B40 X	High	Dual
Low	B40 O	Low	Single

A5 Global	B40_SEL	SIM_SEL
SM-A500F/DS	1	1
SM-A500F/SS	1	0
SM-A500G/DS	0	1
SM-A500G/SS	0	0
SM-A500H/DS	NC	1
SM-A500H/SS	NC	0

BOOT CONFIGURATIONS

00 = SDC1 = SDC2 = USB2.0
01 = SDC2 = SDC1 = USB2.0
10 = SDC1 = USB2.0
11 = USB2.0

MSM Boot Config Pin : Internal PD
BOOT_CONFIG[N] = 0 Secure Boot
= 1 Fast Boot

Engineer: sjoe8	AP	
Drawn by: sjoe8		
Hold Chk:	TITLE:	Size: L
DOC CTRL CHK:	SM-A500F(A5 EUR LTE)	
MFG ENGR CHK:		
QA CHK:	REV:	Drawing Number:
Changed by: sjoe8	Date Changed: Friday, April 18, 2014	Page: 4

SAMSUNG CONFIDENTIAL
THIS DOCUMENT CONTAINS CONFIDENTIAL
AND PROPRIETARY INFORMATION OF
SAMSUNG ELECTRONICS CO'S PROPERTY.
DO NOT DISCLOSE TO OR DUPLICATE FOR OTHERS
EXCEPT AS AUTHORIZED BY SAMSUNG.

PMIC PART

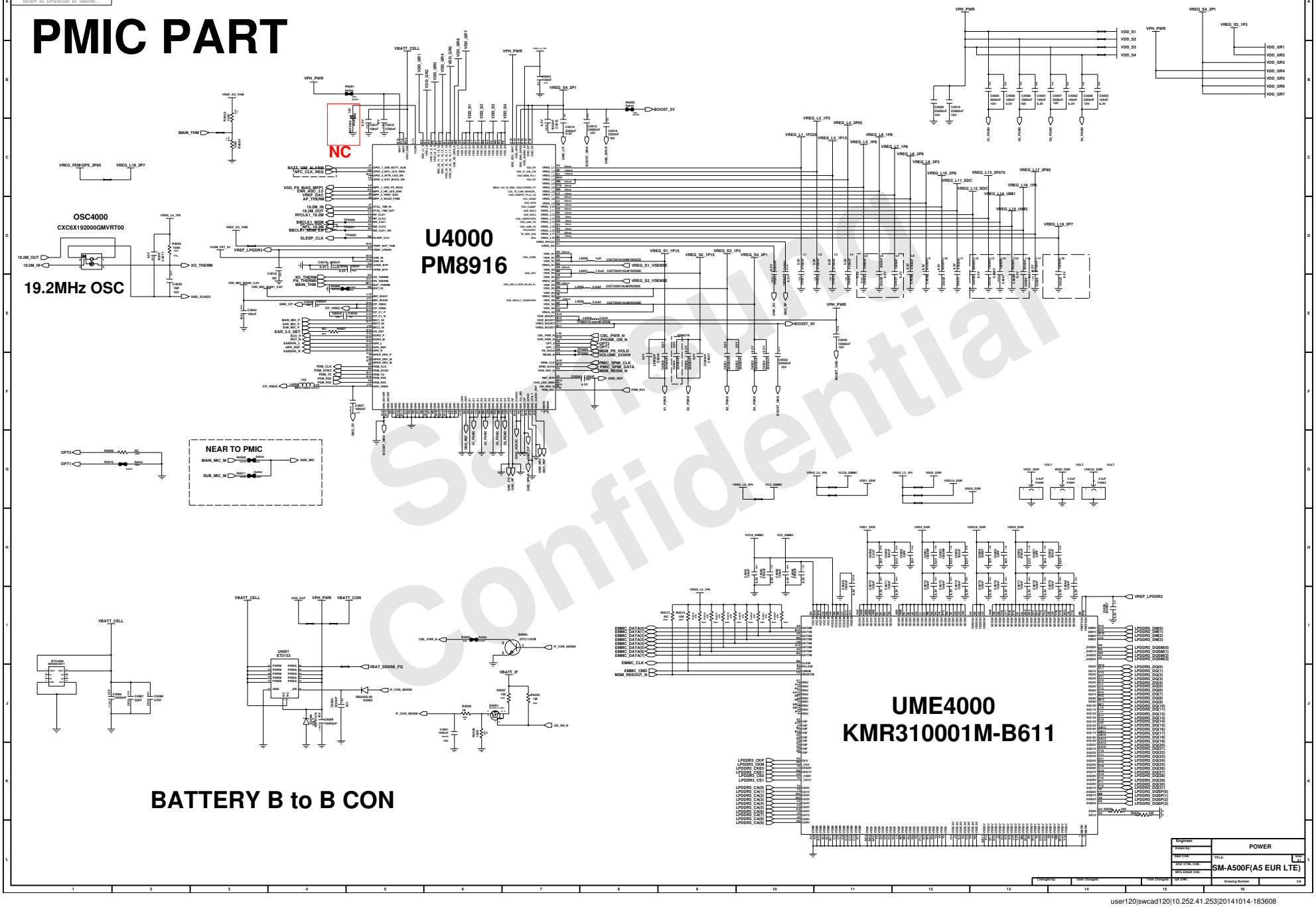

Samsung Confidential

Engineer	POWER
Issued By:	
R&D CHK:	TITLE:
DOC CTRL CHK:	SM-A500F(A5 EUR LTE)
MFG ENGR CHK:	
QA CHK:	Drawing Number

Changed By:	Date Changed:	Time Changed:

SAMSUNG CONFIDENTIAL
THIS DOCUMENT CONTAINS CONFIDENTIAL AND PROPRIETARY INFORMATION OF SAMSUNG ELECTRONICS CO'S PROPERTY. DO NOT DISCLOSE TO OR DUPLICATE FOR OTHERS EXCEPT AS AUTHORISED BY SAMSUNG.

AUDIO PART

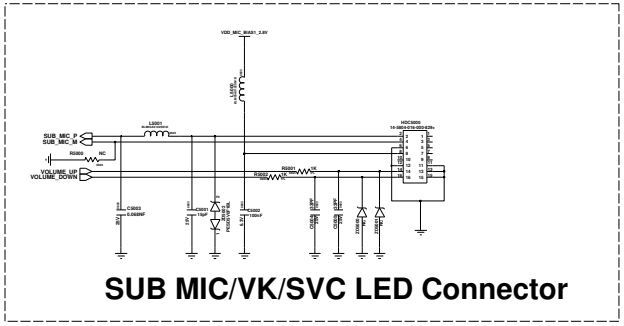

SUB MIC/VK/SVC LED Connector

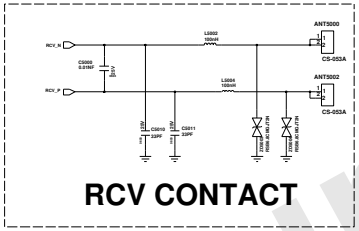

RCV CONTACT

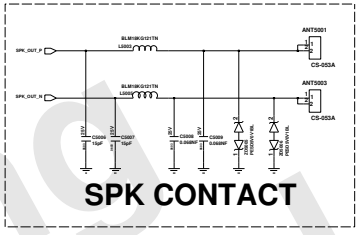

SPK CONTACT

IF SUB PBA CONNECTOR

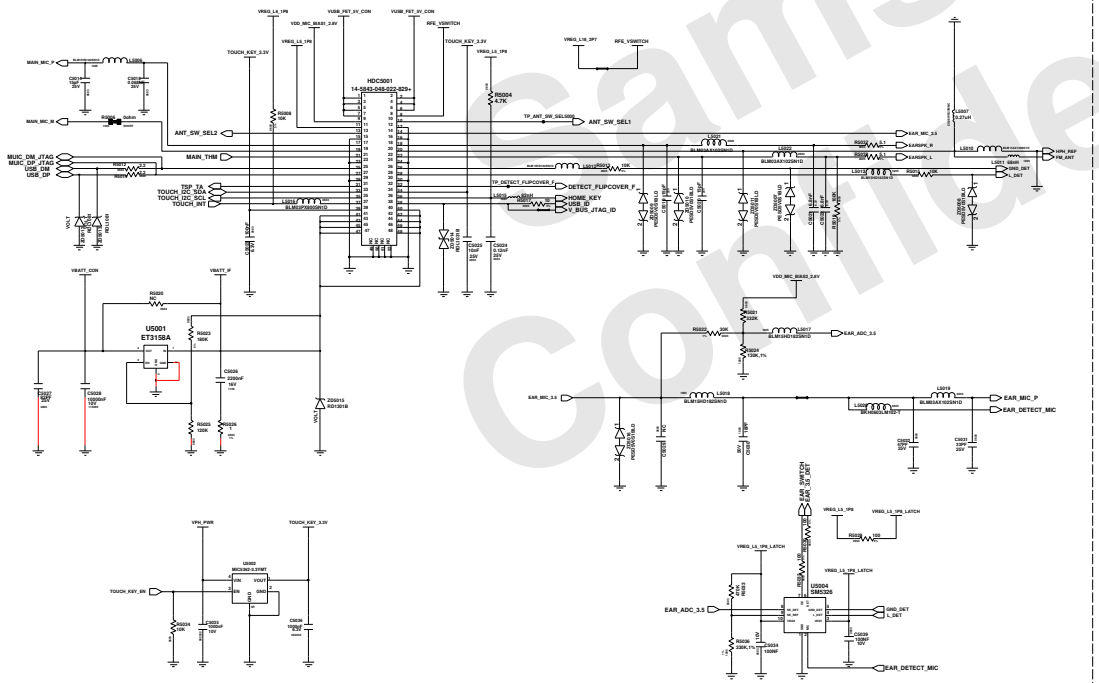

TOUCH KEY LDO

E/J DET IC

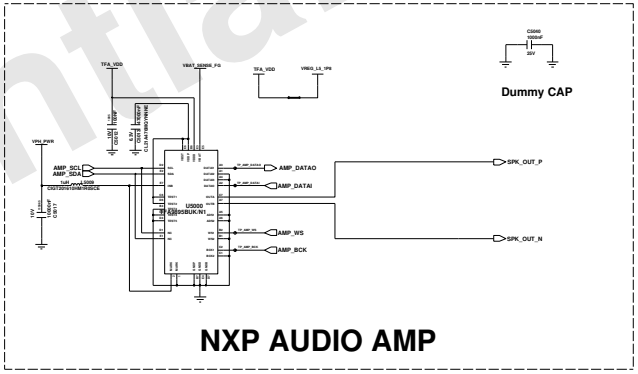

NXP AUDIO AMP

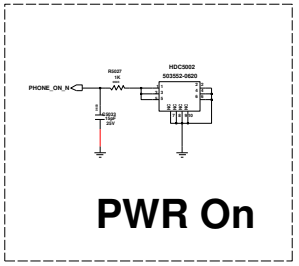

PWR On

Samsung Confidential

Engineer	AUDIO / MOTOR / KEY
TITLE:	
SIZE: A3	
SM-A500F(A5 EUR LTE)	

SAMSUNG CONFIDENTIAL
THIS DOCUMENT CONTAINS CONFIDENTIAL AND PROPRIETARY INFORMATION OF SAMSUNG ELECTRONICS CO.'S PROPERTY. DO NOT DISCLOSE TO OR DUPLICATE FOR OTHERS EXCEPT AS AUTHORISED BY SAMSUNG.

CAMERA PART

13M_CAM Connector (MIPI)

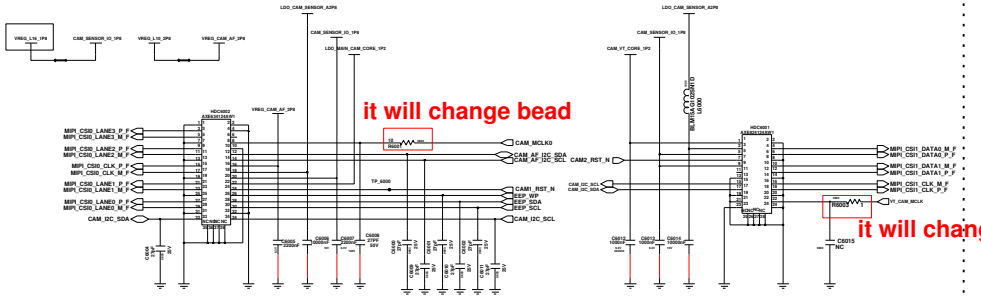

5M_VT_CAM

MAIN_CAM_A_LDO

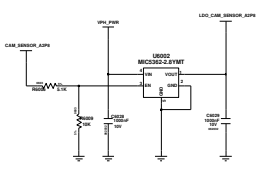

MAIN_CAM_CORE_LDO

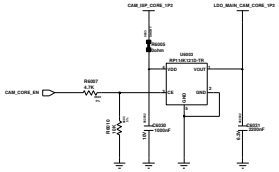

VT CAM LDO

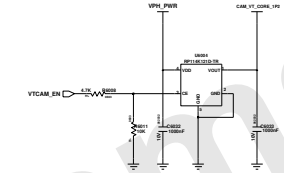

MAIN_CAM_EMI_FILTER

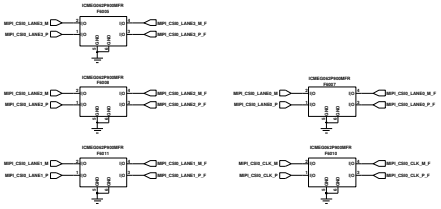

VT_CAM_EMI_FILTER

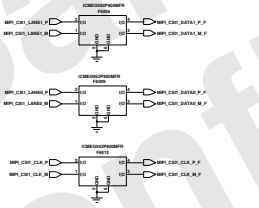

DISPLAY PART

OCTA CONN

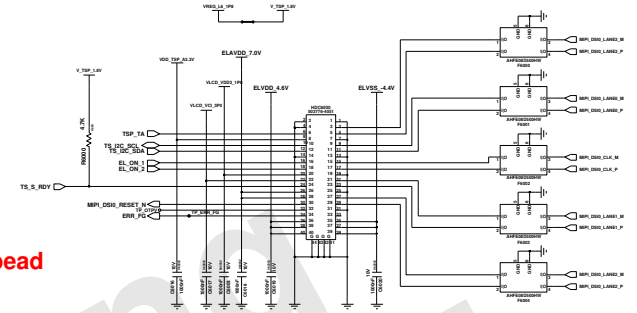

HD OCTA DC-DC

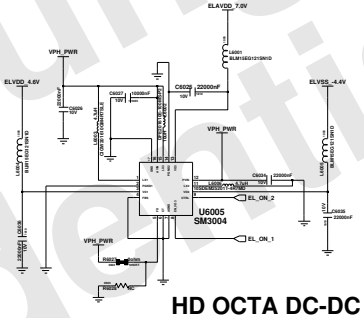

OCTA LDO

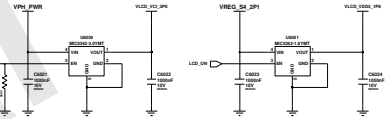

TSP LDO

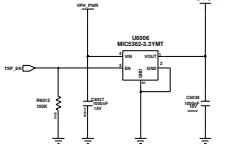

SIM / SD CARD PART

TRAY NANO SIM1 SOCKET

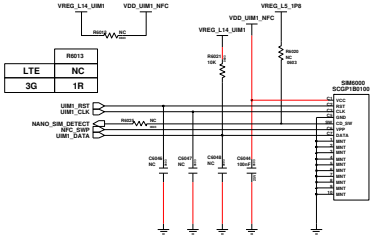

TRAY HYBRID(SIM2/SD) SOCKET

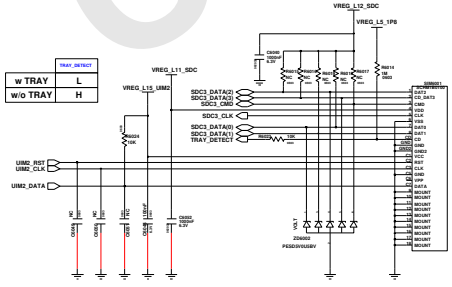

MOTOR PART

Haptic Driver

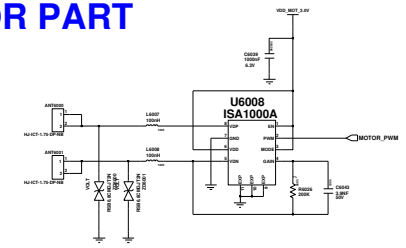

MOTOR LDO(150mA)

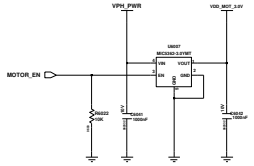

Samsung Confidential

Engineer:	CAMERA / LCD / SIM,SD CON
ENGR SV:	
R&D CHK:	TITLE:
DOC CTRL CHK:	SM-A500F(A5 EUR LTE)
MFG ENGR CHK:	
QA CHK:	

Changed By	Date Changed	Time Changed	Drawing Number

SAMSUNG CONFIDENTIAL
THIS DOCUMENT CONTAINS CONFIDENTIAL AND PROPRIETARY INFORMATION OF SAMSUNG ELECTRONICS CO'S PROPERTY. DO NOT DISCLOSE TO OR DUPLICATE FOR OTHERS EXCEPT AS AUTHORIZED BY SAMSUNG.

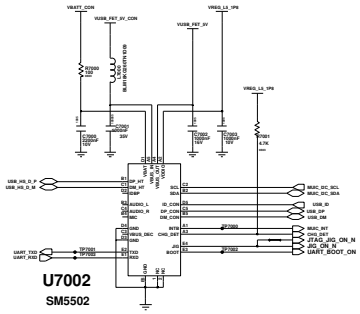

U7002
SM5502

MUIC

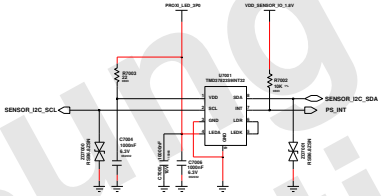

Proximity Detector

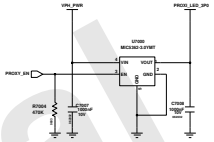

Proximity LDO

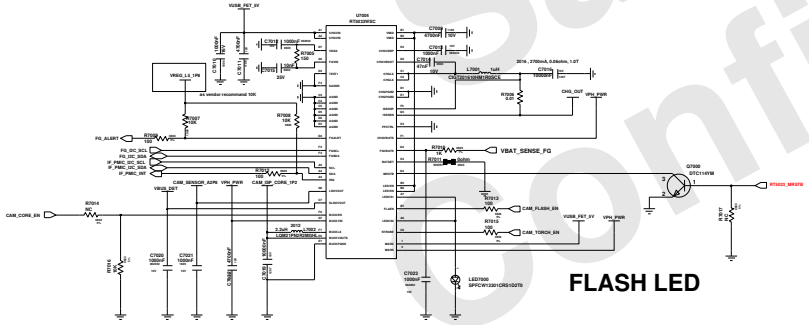

FLASH LED

IF PMIC (RT5033 @ Richtek)
(Charger / Fuel Gauge / Flash LED / CAM DCDC)

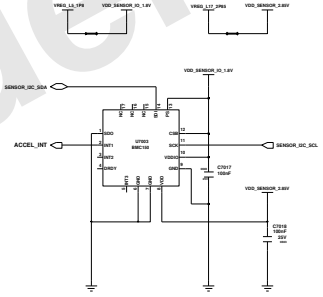

ACC+MAG SENSOR

Samsung Confidential

Engineer	AUDIO / MOTOR / KEY
TITLE:	SM-A500F(A5 EUR LTE)
Drawing Number	6/8