SAMSUNG CONFIDENTIAL
THIS DOCUMENT CONTAINS CONFIDENTIAL PROPRIETARY INFORMATION THAT IS SAMSUNG ELECTRONICS CO'S PROPERTY. DO NOT DISCLOSE TO OR DUPLICATE FOR OTHERS EXCEPT AS AUTHORIZED BY SAMSUNG.

ROSELA LABS

SM-G930F_REV0.7

2015.12.18

sheet01 : GSM / WCDMA / LTE RF
sheet02 : SUB RF
sheet03 : CP, TRANSCEIVER, MEMORY
sheet04 : SENSORS, HUB, BT/WIFI, NFC, GPS, FM, BTP
sheet05 : EXYNOS8890, SIM SOCKET
sheet06 : EXYNOS8890
sheet07 : POWER(PMIC), IF PMIC, WPC, MST
sheet08 : AUDIO CODEC, 2-MIC, AMP, SUB PCB CONN.
sheet09 : DISPLAY, CAMERA

Samsung Confidential

Engineer:
Drawn by:
R&D CHK:
DOC CTRL CHK:
MFG ENGR CHK:
TITLE: LUCKY
Size: A1
Changed by: sorrtb
Date Changed:
Time Changed:
QA CHK:
REV:
Drawing Number:
Page: 5

user65|swcad65|10.253.39.215|20151221-092556

SAMSUNG CONFIDENTIAL
THIS DOCUMENT CONTAINS CONFIDENTIAL INFORMATION AND IS THE PROPERTY OF SAMSUNG ELECTRONICS CO.'S PROPERTY. DO NOT DISCLOSE TO OR DUPLICATE FOR OTHERS EXCEPT AS AUTHORIZED BY SAMSUNG.

RF1 - MAIN_ANT

LB/MB MAIN ANT (B1/2/3/4/5/8/12/13/17/18/19/20/25/26/28/34/39, B7/40 4RXD)

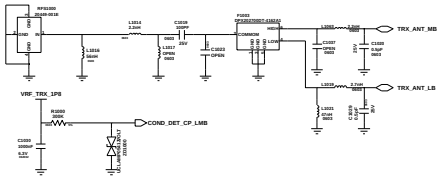

HB MAIN ANT (B7/38/40/41, B1/3/4 4RXD)

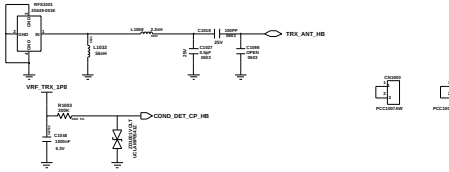

S735 ET MODULATOR

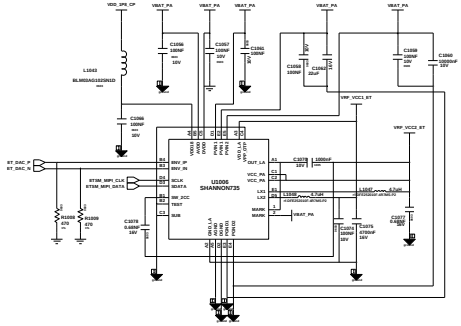

POWER DETECTOR

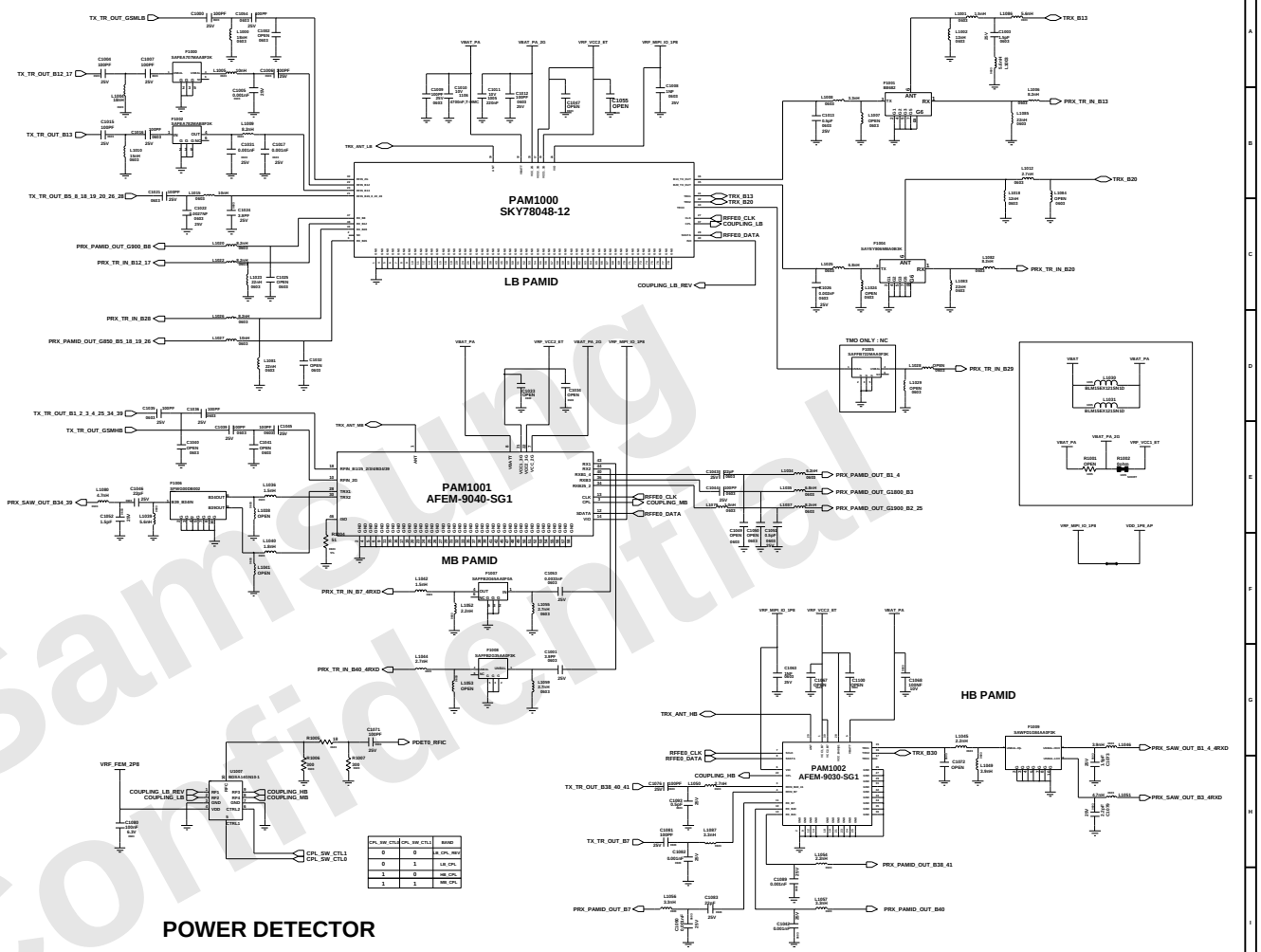

CPL_SW_CTL1	CPL_SW_CTL1	BAND
0	0	LB_CPL_REV
0	1	LB_CPL
1	0	MB_CPL
1	1	MB_CPL

MB/HB SWITCH

MHB PRX LNA

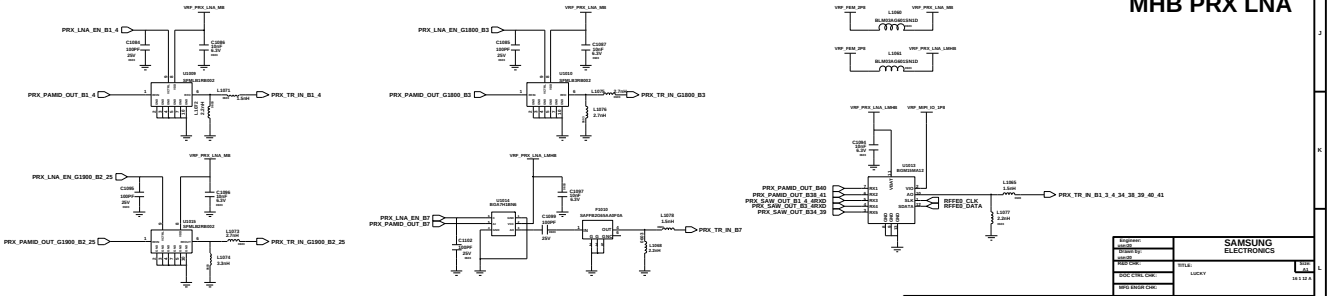

Samsung Confidential

SAMSUNG CONFIDENTIAL
THIS DOCUMENT CONTAINS CONFIDENTIAL PROPRIETARY INFORMATION THAT IS SAMSUNG ELECTRONICS CO'S PROPERTY. DO NOT DISCLOSE TO OR DUPLICATE FOR OTHERS EXCEPT AS AUTHORIZED BY SAMSUNG.

RF2 - LB PRX LNA / SUB ANT

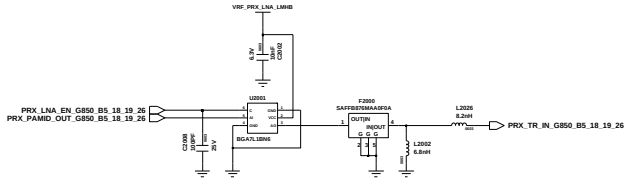

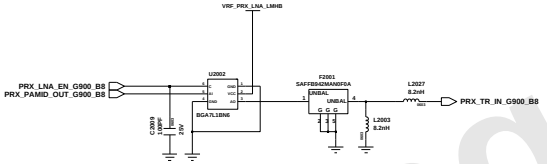

LB PRX LNA

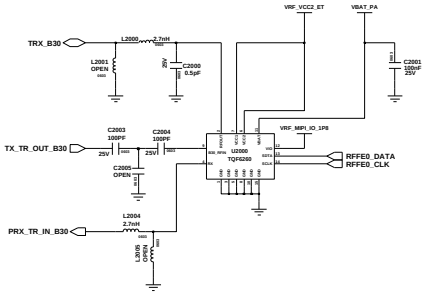

B30 PAD (CA TMO ONLY, Global NC)

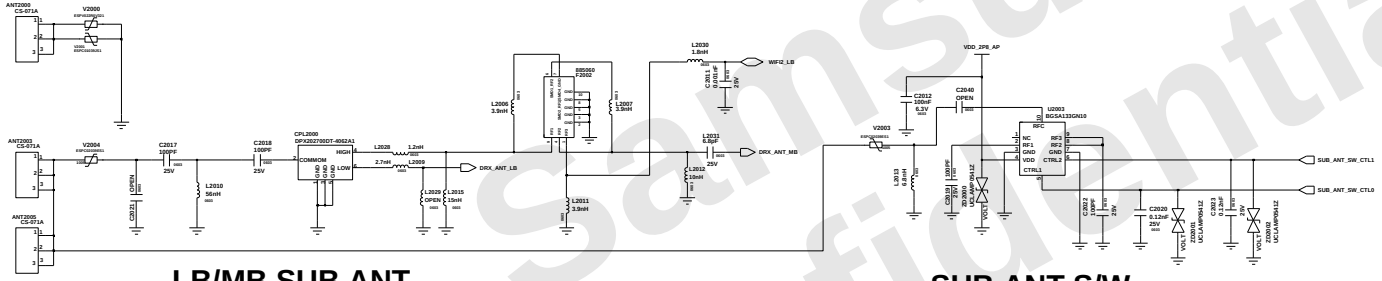

LB/MB SUB ANT

SUB ANT S/W

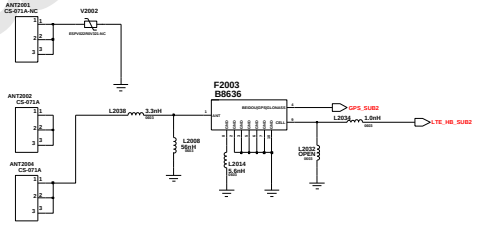

HB SUB ANT

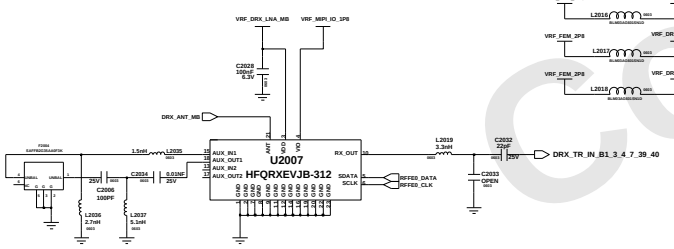

MB LFEM
(B1/4/39, B3/7/40 4RXD)

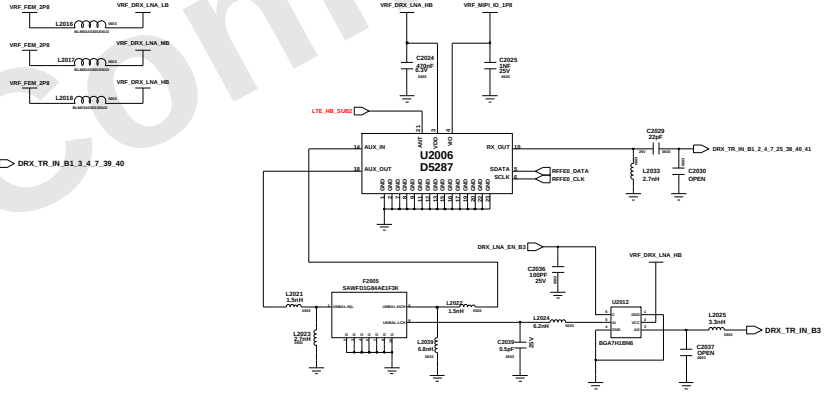

HB LFEM (B2/3/7/25/38/40/41, B1/4 4RXD)

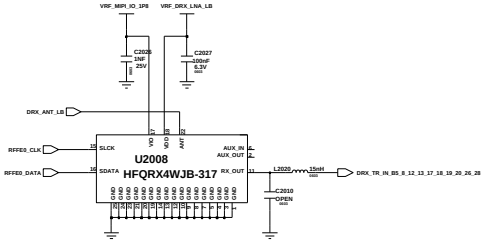

LB LFEM
(B5/8/12/13/17/18/19/20/26/28)

Engineer							
Drawn by							
R&D CHK							
DOC CTRL CHK							
MFG ENGR CHK							
Changed by	Date Changed	Time Changed	QA CHK	REV	Drawing Number	Sheet	

RF

TITLE: CMCC_IOT

Size: A2

Samsung Confidential

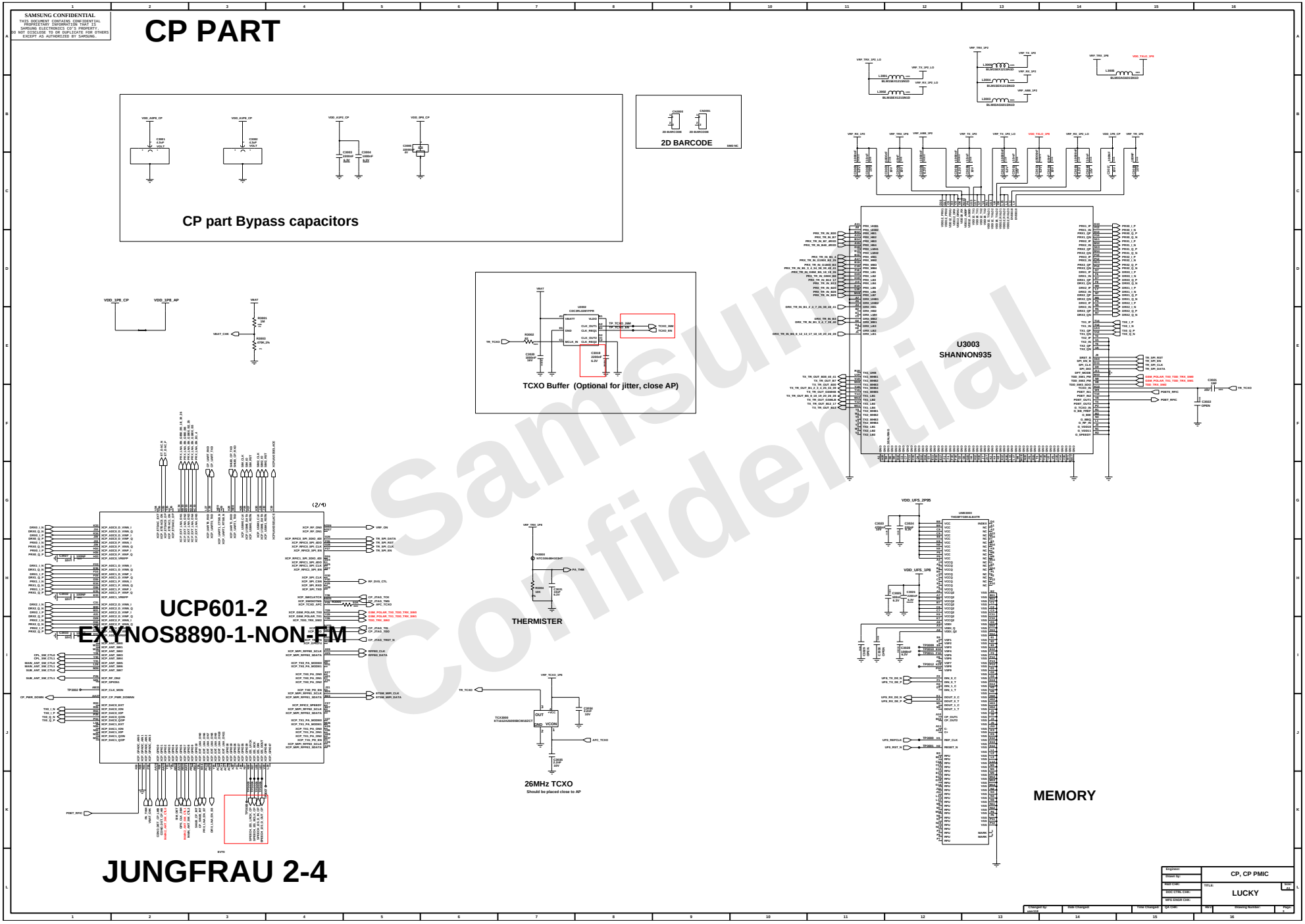

user65|swcad65|10.253.39.215|20151221-092600

SAMSUNG CONFIDENTIAL
THIS DOCUMENT CONTAINS CONFIDENTIAL INFORMATION AND PROPRIETARY TO SAMSUNG ELECTRONICS CO'S PROPERTY. DO NOT DISCLOSE TO OR DUPLICATE FOR OTHERS EXCEPT AS AUTHORIZED BY SAMSUNG.

SENSORS

GPS_SUB2

Debug port

U4004
BCM4774-1

Circuit Check!

GPS + SENSOR HUB(BCM4774)

6 Axis Sensor
(GYRO,ACCEL)

Prox & MIC & LED CON.

HRM Sensor

Magnetic Sensor

Barometer Sensor

BTP

HOME_BTP_TOUCH

BT/WIFI

WiFi_GND CLIP

NFC

0.3mm width

Engineer:	SENSOR, WIFI/BT/GPS/NFC
Sensor by:	
R&D CHK:	TITLE:
DOC CTRL CHK:	LUCKY
MFG ENGR CHK:	
QA CHK:	

Changed by:	Date Changed:	Time Changed:	REV:	Drawing Number:	Page:
user65					

Samsung Confidential

SAMSUNG CONFIDENTIAL
SAMSUNG ELECTRONICS CO'S PROPERTY
THIS DOCUMENT CONTAINS CONFIDENTIAL PROPRIETARY INFORMATION AND IS
SAMSUNG ELECTRONICS CO'S PROPERTY
NO PART OF THIS DOCUMENT MAY BE REPRODUCED
EXCEPT AS AUTHORIZED BY SAMSUNG.

EXYNOS8890(JUNGFRAU)

AP DECAP.

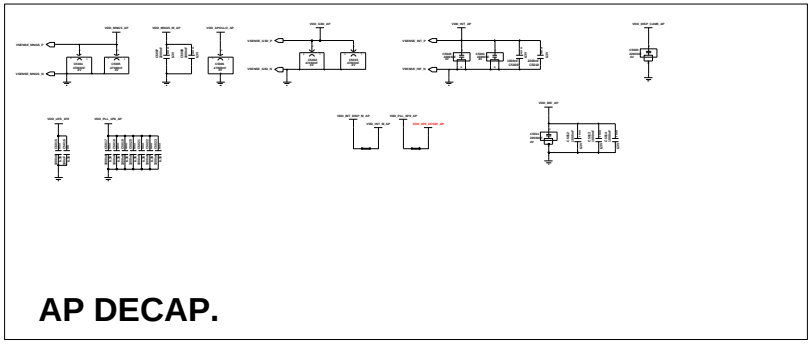

0000	HERO_REV0.0
0001	HERO_REV0.1_12M_or_16M
0010	HERO_REV0.1_12M_or_16M
0011	HERO_REV0.2
0100	HERO_REV0.3
0101	HERO_REV0.4
0110	HERO_REV0.5
0111	HERO_REV0.6
1000	HERO_REV0.7

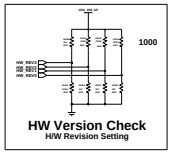

HW Version Check
H/W Revision Setting

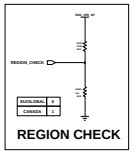

REGION CHECK

close to JTAG Connector

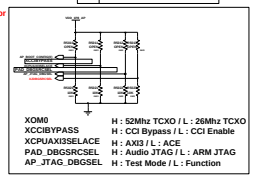

XOM0	H : 52Mhz TCXO / L : 26Mhz TCXO
XCCIBYPASS	H : CCI Bypass / L : CCI Enable
XCPUAXI3SELACE	H : AXI3 / L : ACE
PAD_DBGSRCSEL	H : Audio JTAG / L : ARM JTAG
AP_JTAG_DBGSEL	H : Test Mode / L : Function

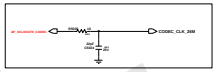

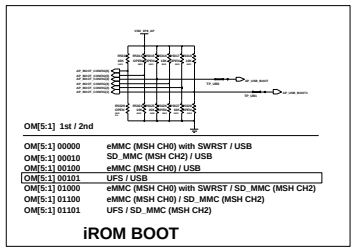

OM[5:1] 1st / 2nd

OM[5:1] 00000	eMMC (MSH CH0) with SWRST / USB
OM[5:1] 00010	SD_MMC (MSH CH2) / USB
OM[5:1] 00100	eMMC (MSH CH0) / USB
OM[5:1] 00101	UFS / USB
OM[5:1] 01000	eMMC (MSH CH0) with SWRST / SD_MMC (MSH CH2)
OM[5:1] 01100	eMMC (MSH CH0) / SD_MMC (MSH CH2)
OM[5:1] 01101	UFS / SD_MMC (MSH CH2)

iROM BOOT

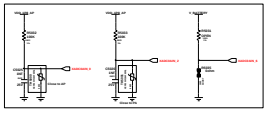

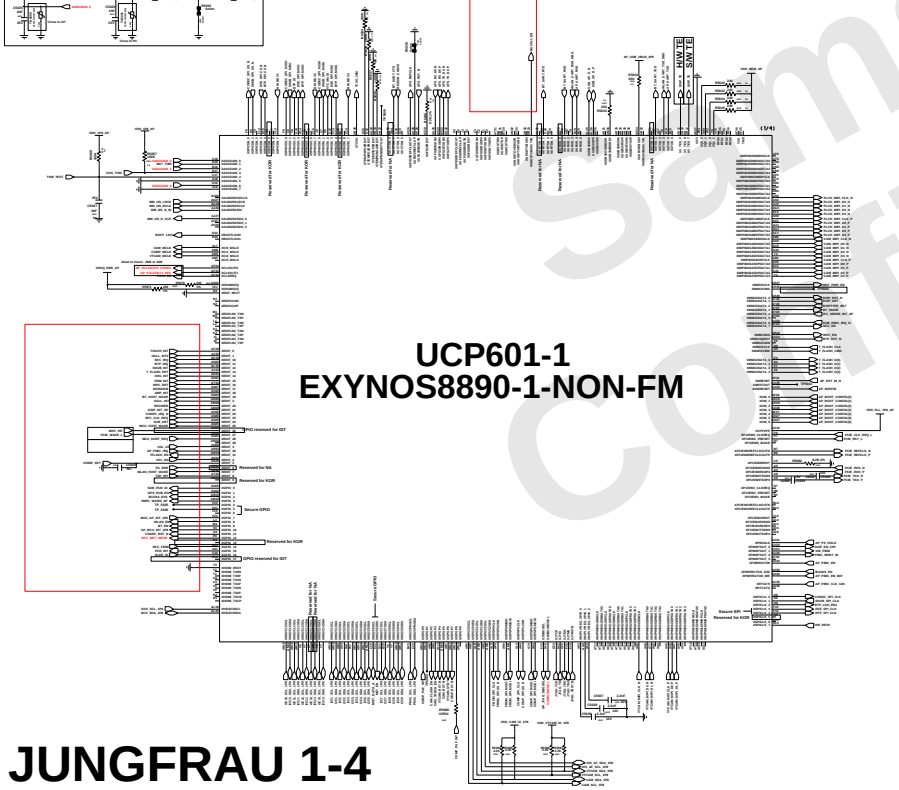

UCP601-1
EXYNOS8890-1-NON-FM

H/W I2C

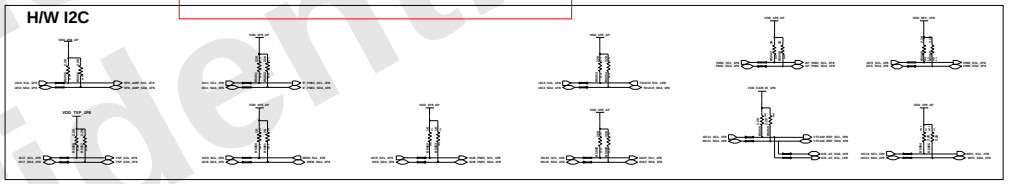

NANOSIM CON.

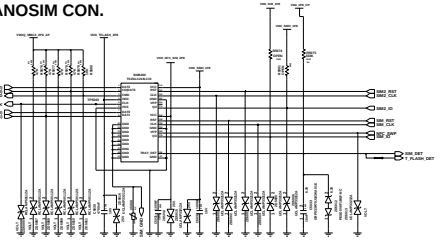

PCB JTAG

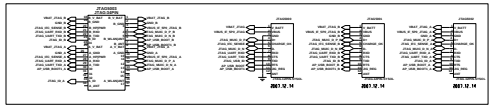

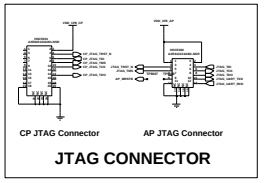

CP JTAG Connector
AP JTAG Connector

JTAG CONNECTOR

Project	AP, SM4SD SOCKET
Engineer	
Size	LUCKY
Date	
Sheet Name	
File Name	

Samsung Confidential

SAMSUNG CONFIDENTIAL
THIS DOCUMENT CONTAINS CONFIDENTIAL INFORMATION AND PROPRIETARY TO SAMSUNG ELECTRONICS CO'S PROPERTY. DO NOT DISCLOSE TO OR DUPLICATE FOR OTHERS EXCEPT AS AUTHORIZED BY SAMSUNG.

EXYNOS8890(JUNGFRAU)

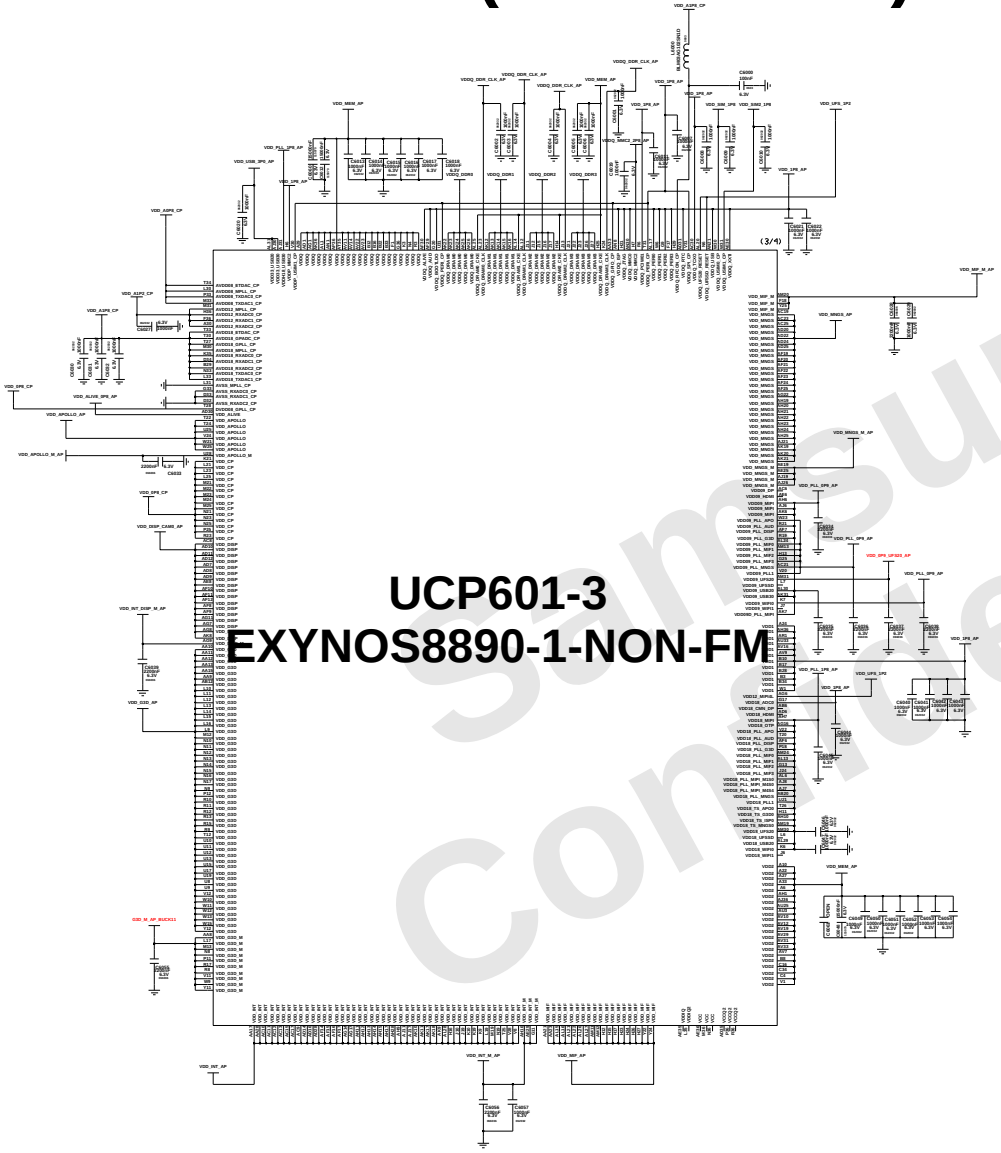

UCP601-3
EXYNOS8890-1-NON-FM

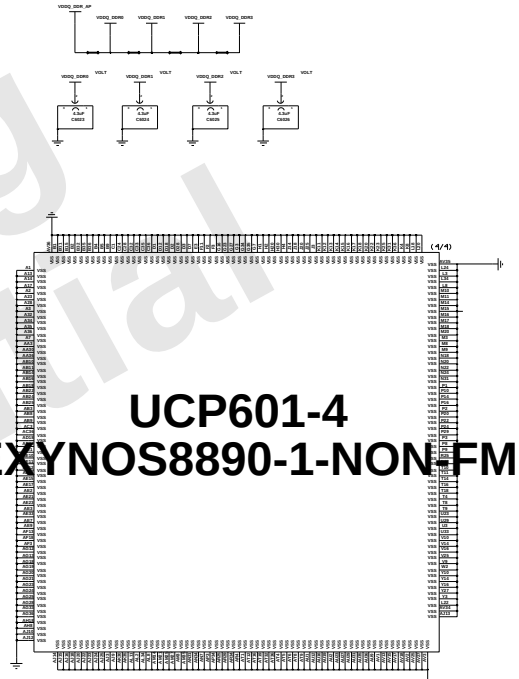

UCP601-4
EXYNOS8890-1-NON-FM

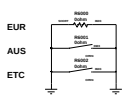

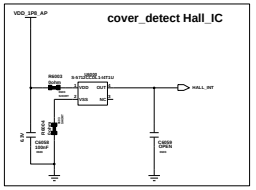

Samsung Confidential

SAMSUNG ELECTRONICS

TITLE: LUCKY

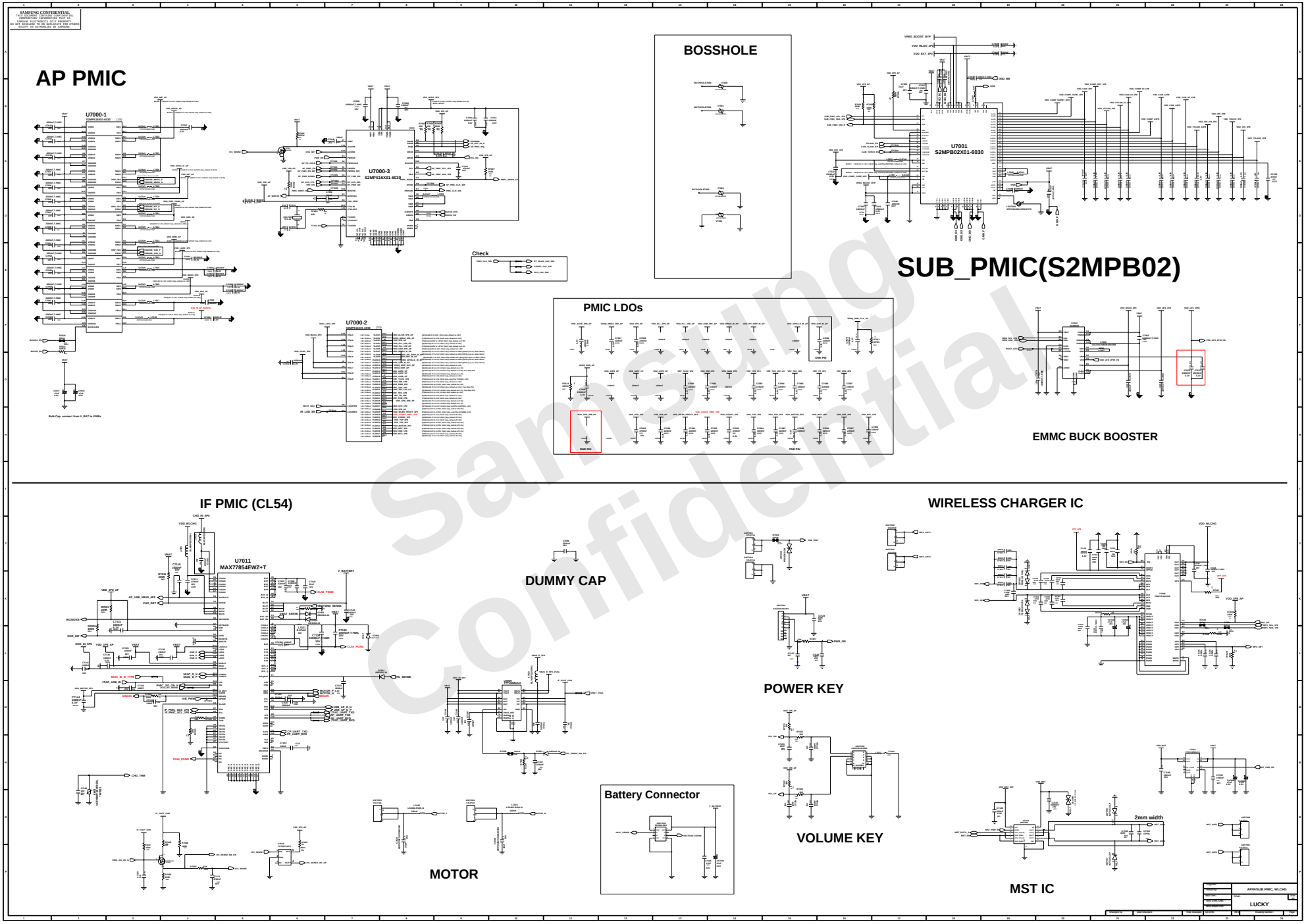

user65|swcad65|10.253.39.215|20151221-092605

SAMSUNG CONFIDENTIAL
THE INFORMATION CONTAINED HEREIN IS THE PROPRIETARY AND CONFIDENTIAL PROPERTY OF SAMSUNG ELECTRONICS CO.'S PROPERTY
DO NOT COPY, DISTRIBUTE OR DISCLOSE THIS DOCUMENT TO ANY THIRD PARTY WITHOUT THE EXPRESS WRITTEN AUTHORIZATION OF SAMSUNG.

AUDIO

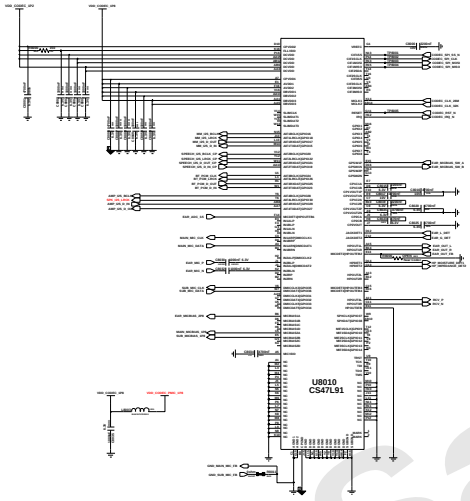

CODEC

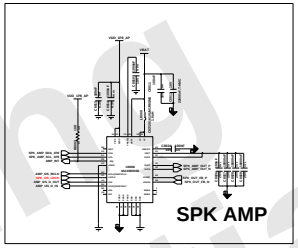

SPK AMP

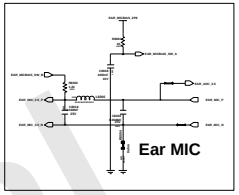

Ear MIC

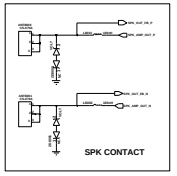

SPK CONTACT

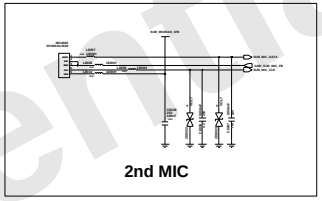

2nd MIC

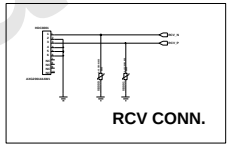

RCV CONN.

SUB FPCB IF CONN.

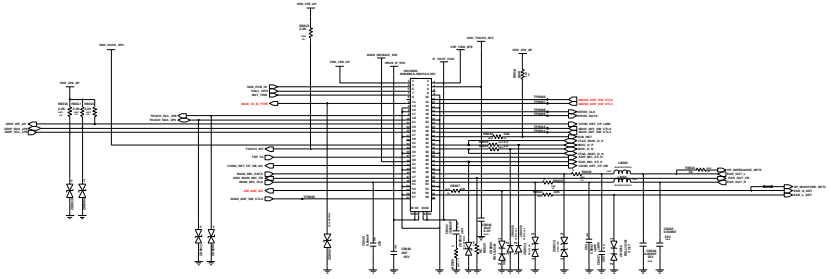

Samsung Confidential

	AUDIO, SUB PCB CON.
	LUCKY

SAMSUNG CONFIDENTIAL
THIS DOCUMENT CONTAINS CONFIDENTIAL INFORMATION AND PROPRIETARY TO SAMSUNG ELECTRONICS CO'S PROPERTY. DO NOT DISCLOSE TO OR DUPLICATE FOR OTHERS EXCEPT AS AUTHORIZED BY SAMSUNG.

CAMERA

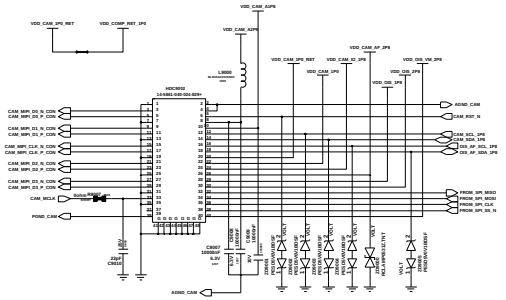

12M_CAM

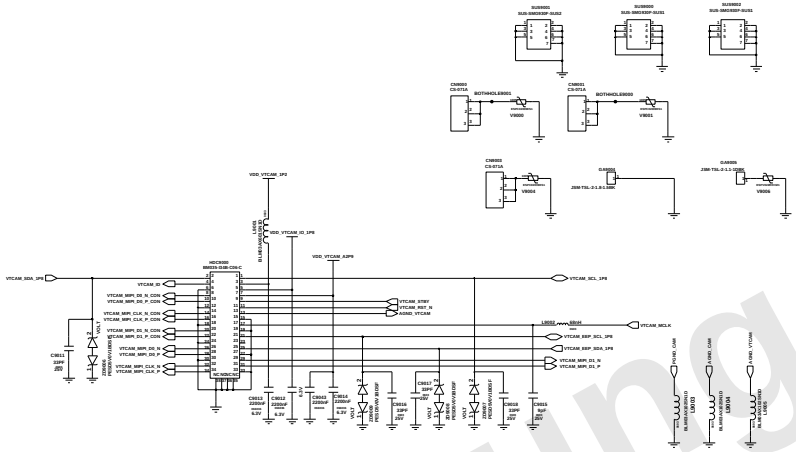

5M_CAM

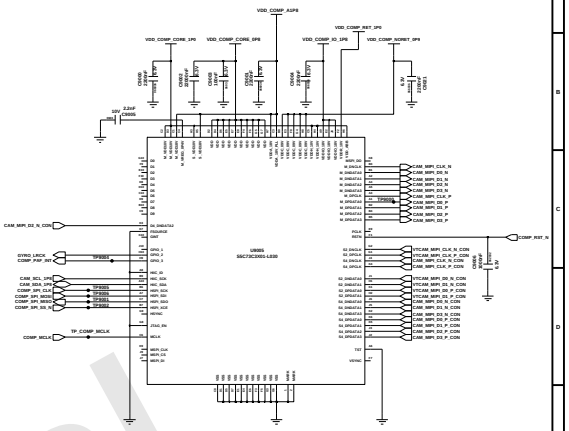

COMPANION IC

DISPLAY (For WQHD)

OCTA CONN

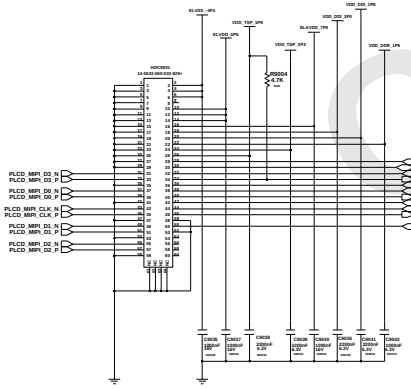

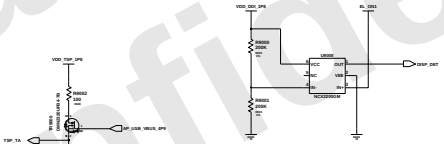

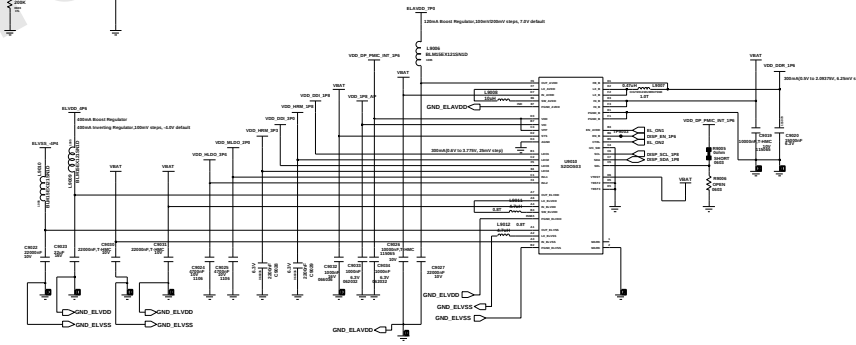

DISPLAY PM IC

Samsung Confidential

Engineer:	CAMERA, DISPLAY, MHL
Model No:	TITLE:
R&D CHK:	SM-G920F
DOC CTRL CHK:	
MFG ENGR CHK:	

Changed by:	Date Changed:	Time Changed:	QA CHK:	REV:	Drawing Number:	Page:

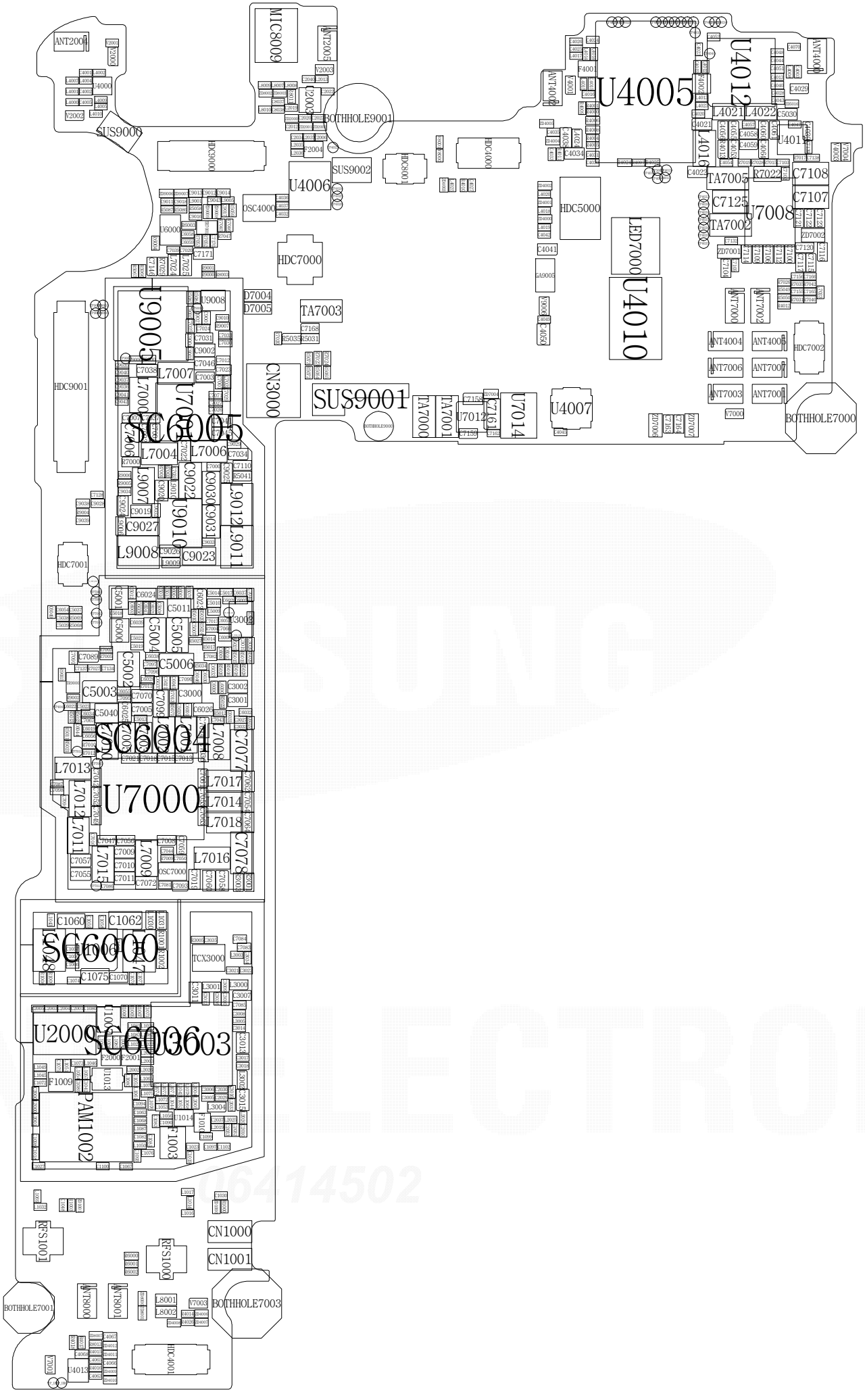

MIC8009
ANT2004
SUS9000
BOTHHOLE9001
HDC9000
SUS9002
HDC8001
HDC4000
U4006
OSC4000
HDC7000
U4005
U4012
ANT4000
L4021
L4022
L4016
U4011
TA7005
R7022
C7108
C7125
C7107
U7008
TA7002
HDC5000
LED7000
U4010
ANT7000
ANT7002
ANT4004
ANT4005
ANT7006
ANT7007
ANT7003
ANT7001
HDC7002
BOTHHOLE7000
U9005
U9008
D7004
D7005
TA7003
CN3000
SUS9001
TA7000
TA7001
U7012
C7161
U7014
U4007
HDC9001
L7007
L7004
L7006
L9007
C9022
C9030
L9012
L9011
C9027
U9010
L9008
C9023
HDC7001
C5004
C5005
C5006
C5003
C5040
C7077
L7013
U7000
L7017
L7014
L7018
L7016
C7078
C1060
C1062
C1075
TCX3000
U2000
F1009
PAM1002
F1003
RFS1001
RFS1000
CN1000
CN1001
BOTHHOLE7001
ANT8000
ANT8001
L8001
L8002
BOTHHOLE7003
HDC4001

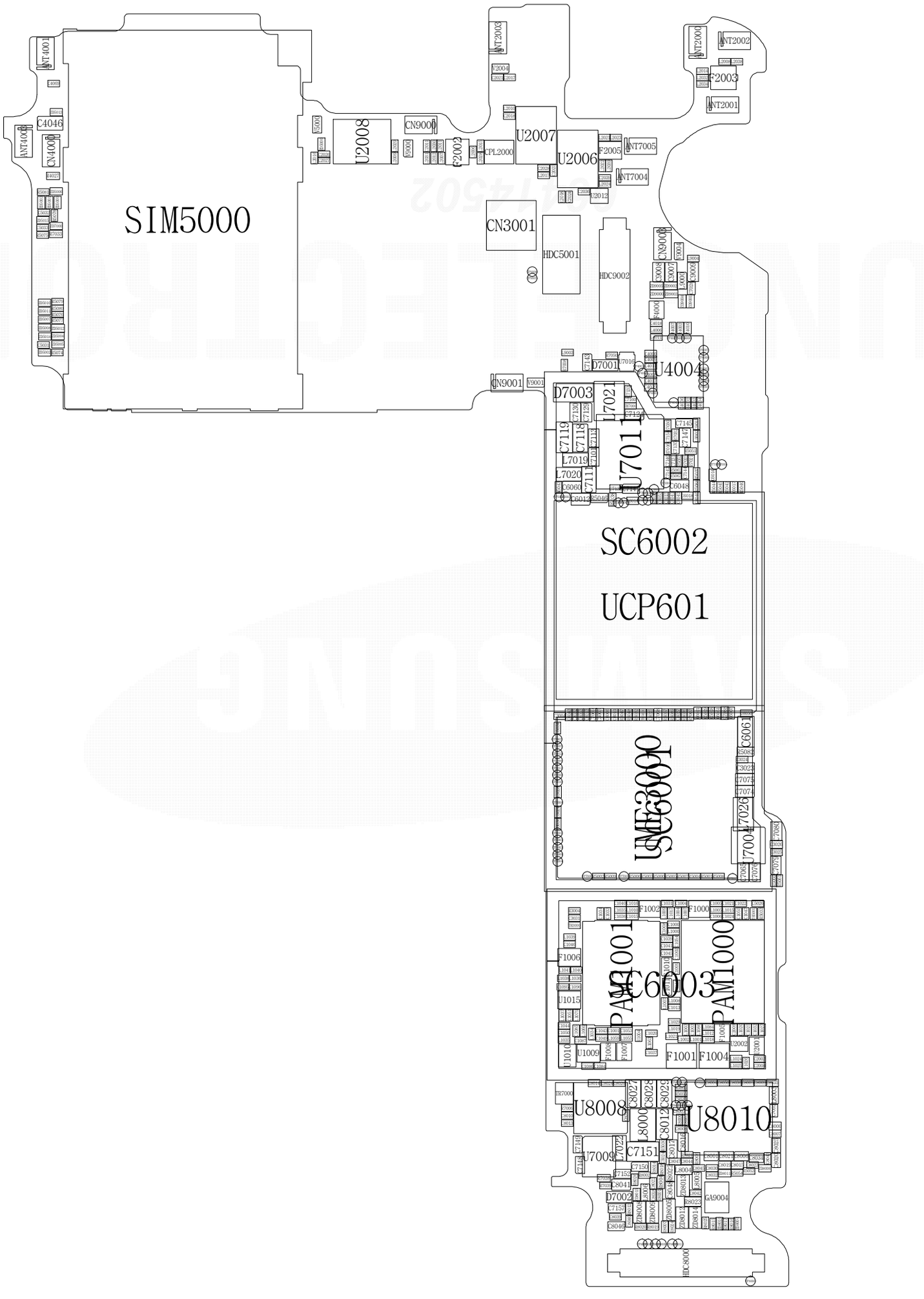
SIM5000
ANT4001
C4046
ANT4003
CN4000
R4027
U2008
CN9000
F2002
CPL2000
U2007
U2006
ANT2003
C2004
ANT2000
ANT2002
F2003
ANT2001
F2005
ANT7005
ANT7004
C2012
CN3001
HDC5001
HDC9002
CN9002
U4004
D7001
CN9001
D7003
L7021
L7011
C7119
C7118
L7019
L7020
C6060
C6012
C6048
SC6002
UCP601
UME3000
C6061
L7026
L7004
PAM1001
C6003
PAM1000
F1002
F1000
F1006
U1015
U1010
U1009
F1001
F1004
U8008
U8010
L8000
C8012
U7009
L7022
C7151
C7150
C8041
D7002
C7157
C8046
GA9004
HDC8000
JTAG5000
JTAG5001
JTAG5002