SAMSUNG CONFIDENTIAL
THIS DOCUMENT CONTAINS CONFIDENTIAL PROPRIETARY INFORMATION THAT IS SAMSUNG ELECTRONICS CO'S PROPERTY. DO NOT DISCLOSE TO OR DUPLICATE FOR OTHERS EXCEPT AS AUTHORIZED BY SAMSUNG.

ROSELA LABS

Project Name: J3_AUS/KOR

Model Name: SM-J320ZN/N0

Revision : REV02

Date : 2016.03.14

SHEET 1 : RF PART
SHEET 2 : BT/WIFI, GPS, NFC
SHEET 3 : MSM8916
SHEET 4 : PM8916 (PMIC), IF PMIC, BAT, USB
SHEET 5 : eMCP, AUDIO, MOTOR, KEY
SHEET 6 : CAMERA, DISPLAY, SOCKET, JTAG

Samsung Confidential

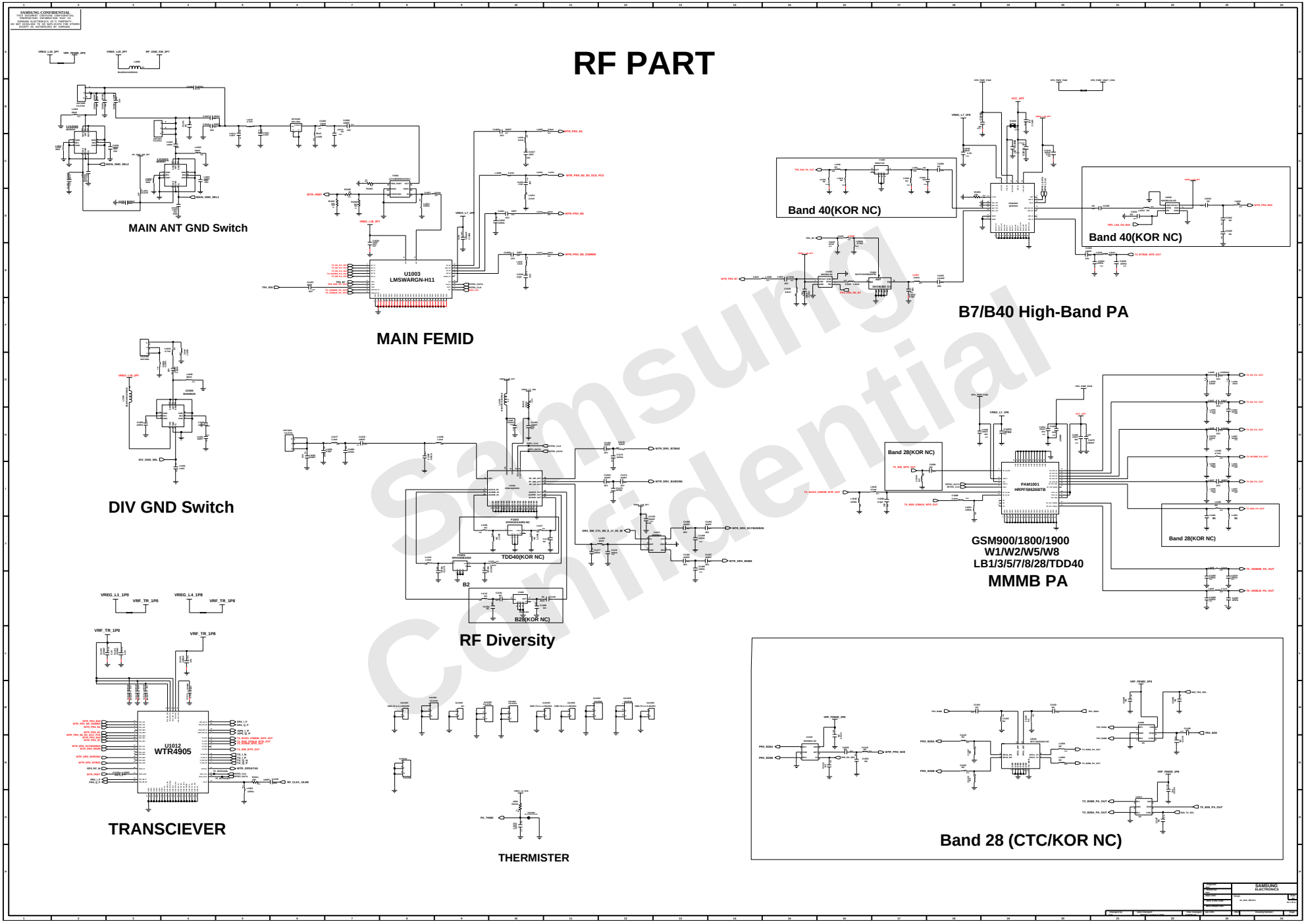

Samsung Confidential

user86|swcad86|10.252.50.47|20160324-100442

SAMSUNG CONFIDENTIAL
THIS DOCUMENT CONTAINS CONFIDENTIAL INFORMATION THAT IS PROPERTY OF SAMSUNG ELECTRONICS CO'S PROPERTY. DO NOT DISCLOSE TO OR DUPLICATE FOR OTHERS EXCEPT AS AUTHORIZED BY SAMSUNG.

Connectivity PART

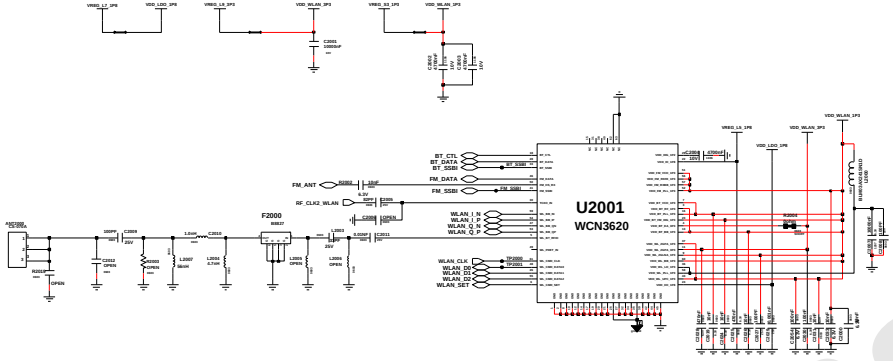

BT / WIFI / FM

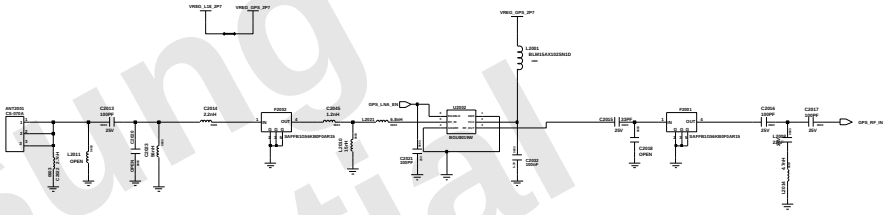

GPS / GNSS / BEIDOU

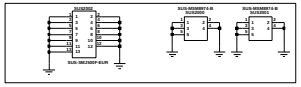

SUS

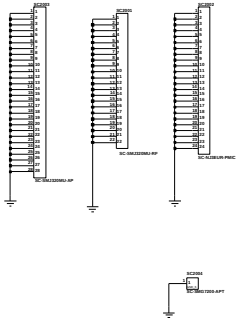

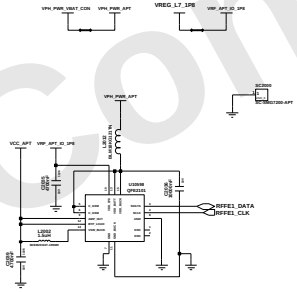

APT MODULATOR

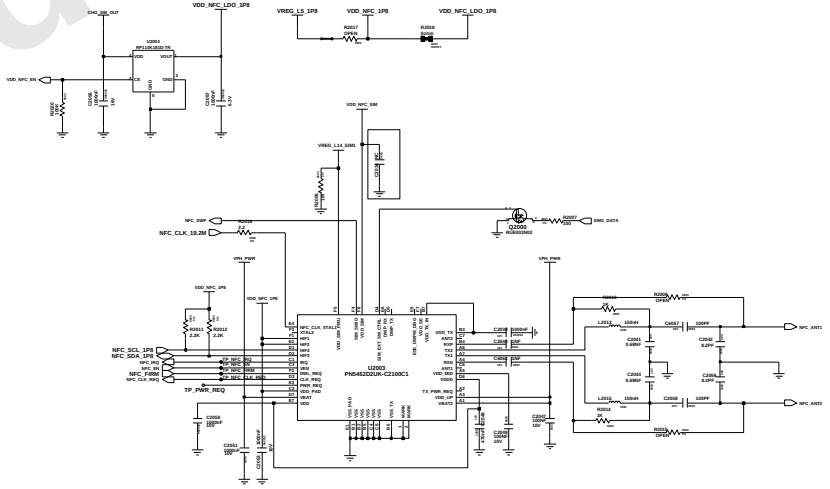

NFC

Engineer	CONNEOCTIVITY / TRX IC
Model No.	
R&D CHK:	
DOC CTRL CHK:	J3_AUS_REV0.2
RPG ENGR CHK:	
QA CHK:	

Samsung Confidential

SAMSUNG CONFIDENTIAL
THIS DOCUMENT CONTAINS CONFIDENTIAL
PROPRIETARY INFORMATION THAT IS
SAMSUNG ELECTRONICS CO'S PROPERTY.
DO NOT DISCLOSE TO OR DUPLICATE FOR OTHERS
EXCEPT AS AUTHORIZED BY SAMSUNG.

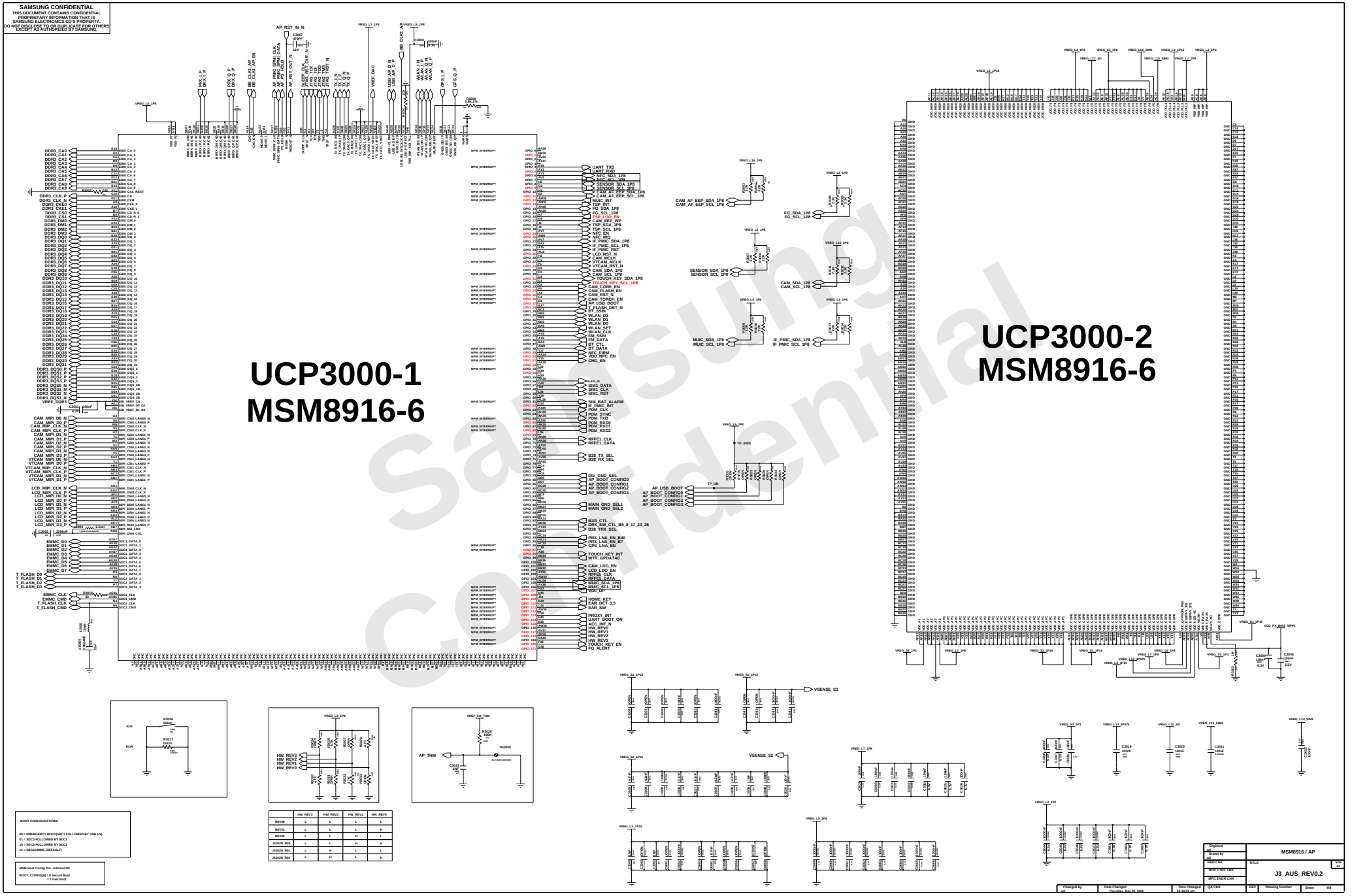

	HW_REV3	HW_REV2	HW_REV1	HW_REV0
REV00	L	L	L	L
REV01	L	L	L	H
REV02	L	L	H	L
J3202N_R00	L	L	H	H
J3202N_R01	L	H	L	L
J3202N_R02	L	H	L	H

user86|swcad86|10.252.50.47|20160324-100445

SAMSUNG CONFIDENTIAL
THIS DOCUMENT CONTAINS CONFIDENTIAL INFORMATION AND PROPRIETARY OF SAMSUNG ELECTRONICS CO'S PROPERTY. DO NOT DISCLOSE TO OR DUPLICATE FOR OTHERS EXCEPT AS AUTHORIZED BY SAMSUNG.

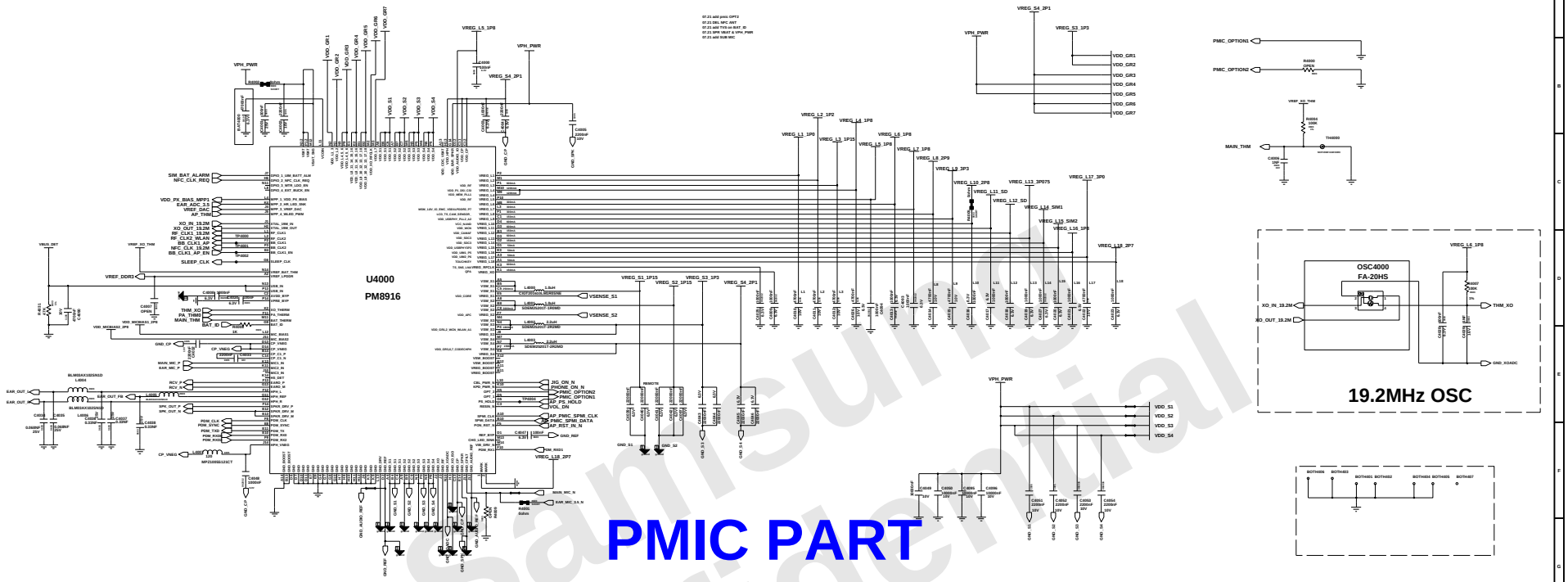

19.2MHz OSC

PMIC PART

USER INTERFACE PART

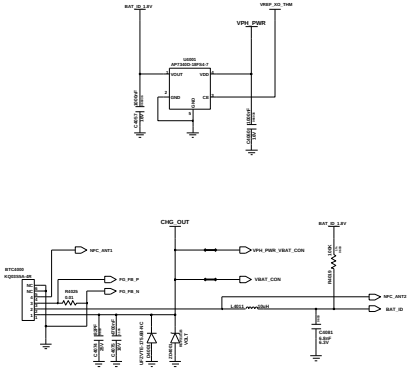

Battery Connector

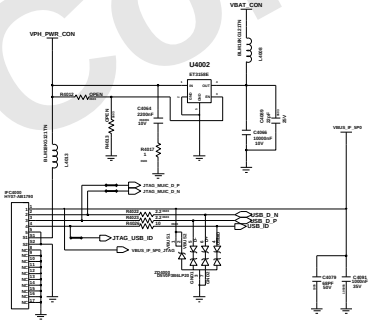

USB Connector

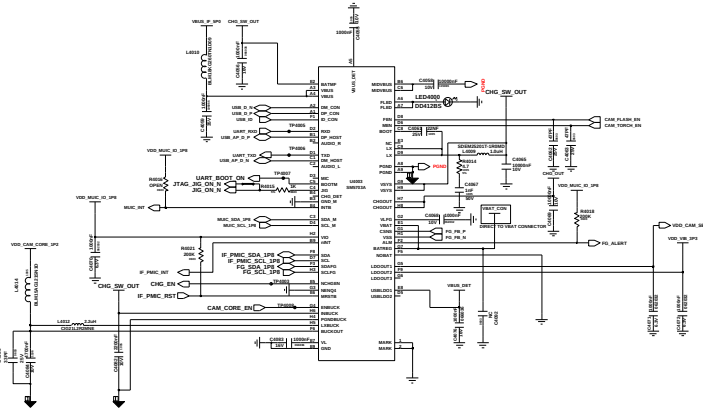

IF PMIC(MUIC+CHG+FG+BUCK+LDO)

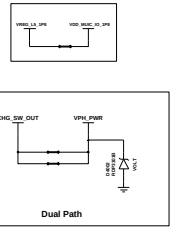

Engineer		PMIC / USER INTERFACE	
Model No.			
R&D CHK:		TITLE:	SIZE: A3
DOC CTRL CHK:		J3_AUS_REV0.2	
MFG ENGR CHK:			
QA CHK:		Drawing Number	4N

Changed by:	Date Changed:	Time Changed:

Samsung Confidential

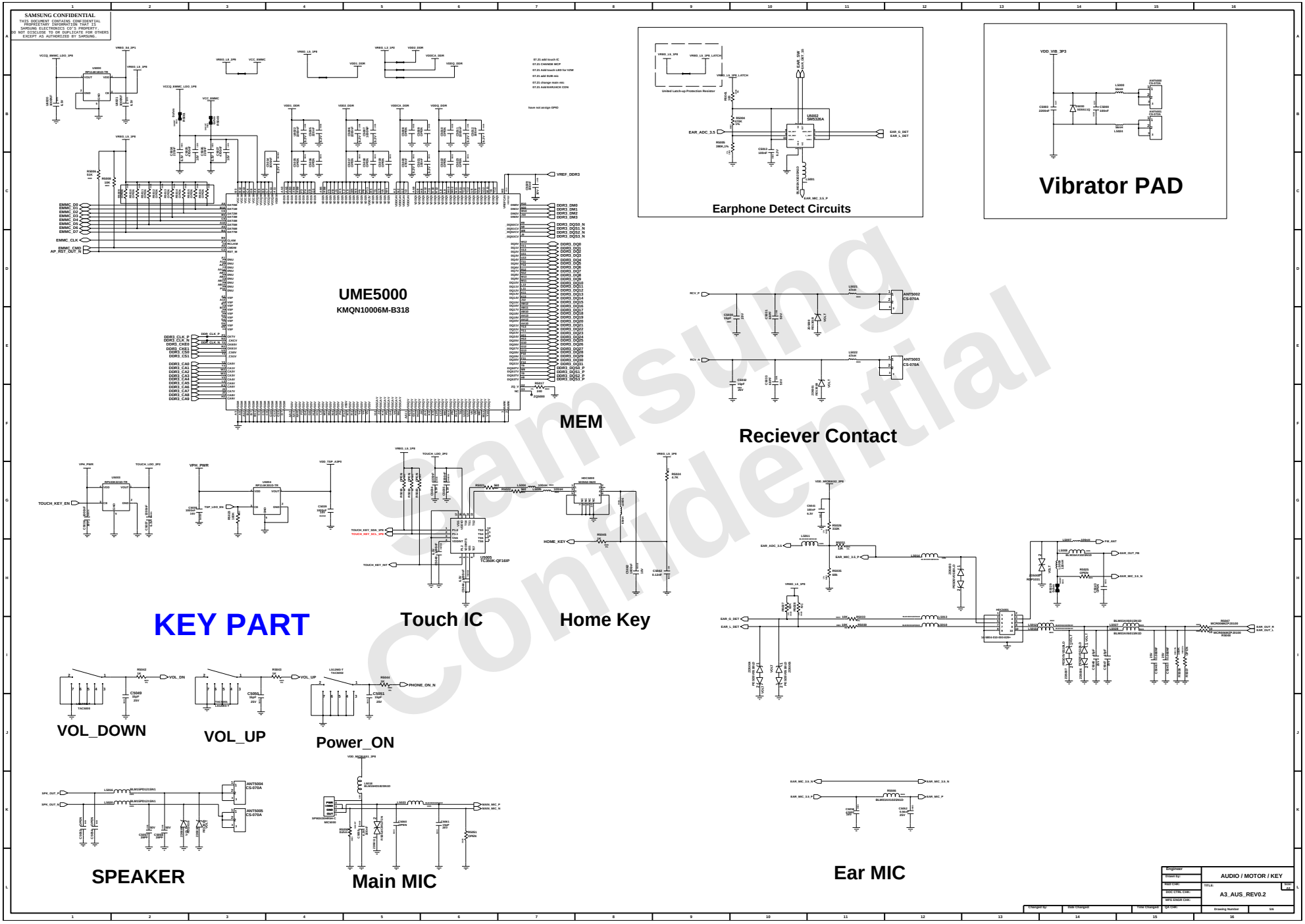
SAMSUNG CONFIDENTIAL
THIS DOCUMENT CONTAINS CONFIDENTIAL PROPRIETARY INFORMATION THAT IS SAMSUNG ELECTRONICS CO'S PROPERTY. DO NOT DISCLOSE TO OR DUPLICATE FOR OTHERS EXCEPT AS AUTHORIZED BY SAMSUNG.
UME5000
KMQN10006M-B318
MEM
Earphone Detect Circuits
Vibrator PAD
Reciever Contact
KEY PART
Touch IC
Home Key
VOL_DOWN
VOL_UP
Power_ON
SPEAKER
Main MIC
Ear MIC
AUDIO / MOTOR / KEY
A3_AUS_REV0.2
user86|swcad86|10.252.50.47|20160324-100448

SAMSUNG CONFIDENTIAL
THIS DOCUMENT CONTAINS CONFIDENTIAL INFORMATION AND PROPRIETARY TO SAMSUNG ELECTRONICS CO'S PROPERTY. DO NOT DISCLOSE TO OR DUPLICATE FOR OTHERS EXCEPT AS AUTHORIZED BY SAMSUNG.

CAMERA PART

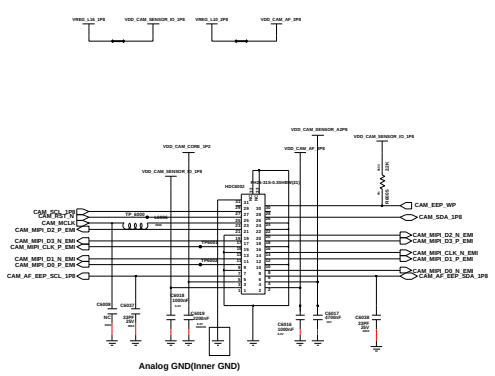

8M_CAM Connector (MIPI)

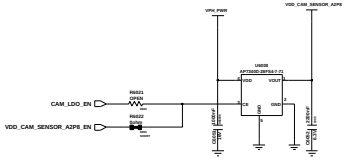

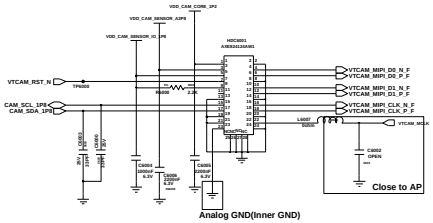

5M_VT_CAM

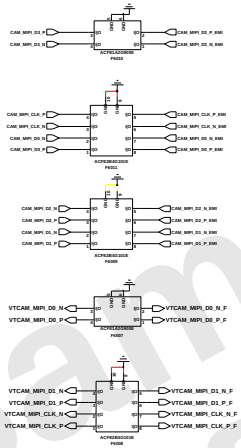

DISPLAY PART

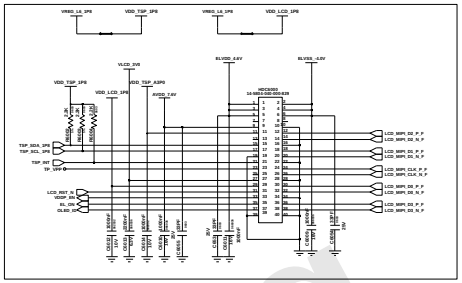

OCTA Connector

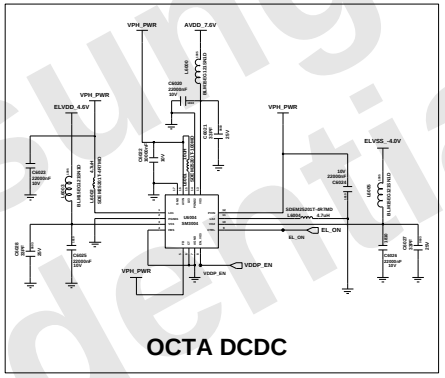

OCTA DCDC

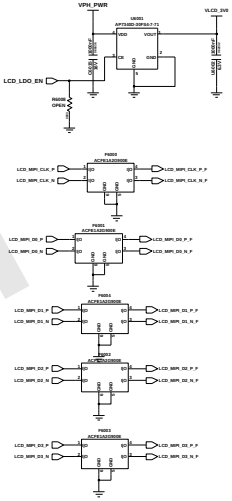

SIM / SD CARD PART

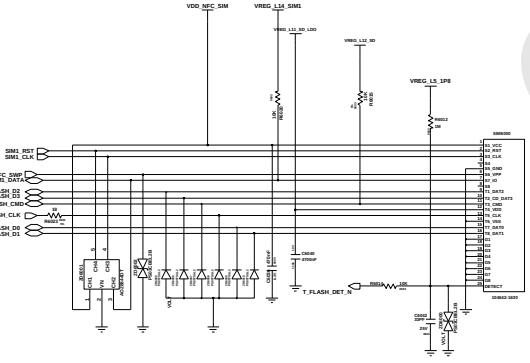

UIM1 / SD Card Connector

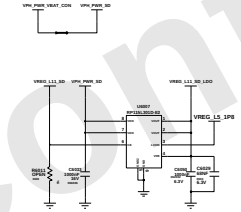

SENSOR

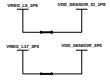

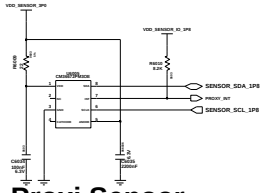

Proxi Sensor

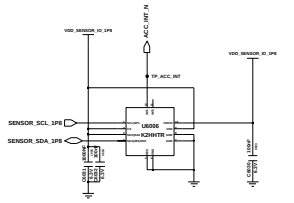

Accel. Sensor

JTAGs

PCB JTAG CON

ARRAY JTAG

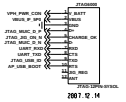

ARRAY JTAG

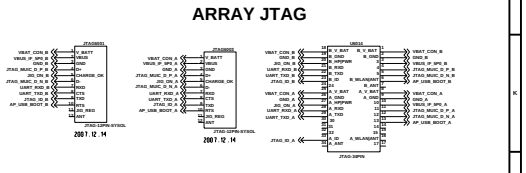

Engineer:	CAMERA / LCD / SIM,SD CON
Sensor Eg:	
R&D CHK:	TITLE:
DOC CTRL CHK:	A3_AUS_REV0.2
MFG ENGR CHK:	
QA CHK:	

Changed By:	Date Changed:	Time Changed:	Drawing Number:

Samsung Confidential

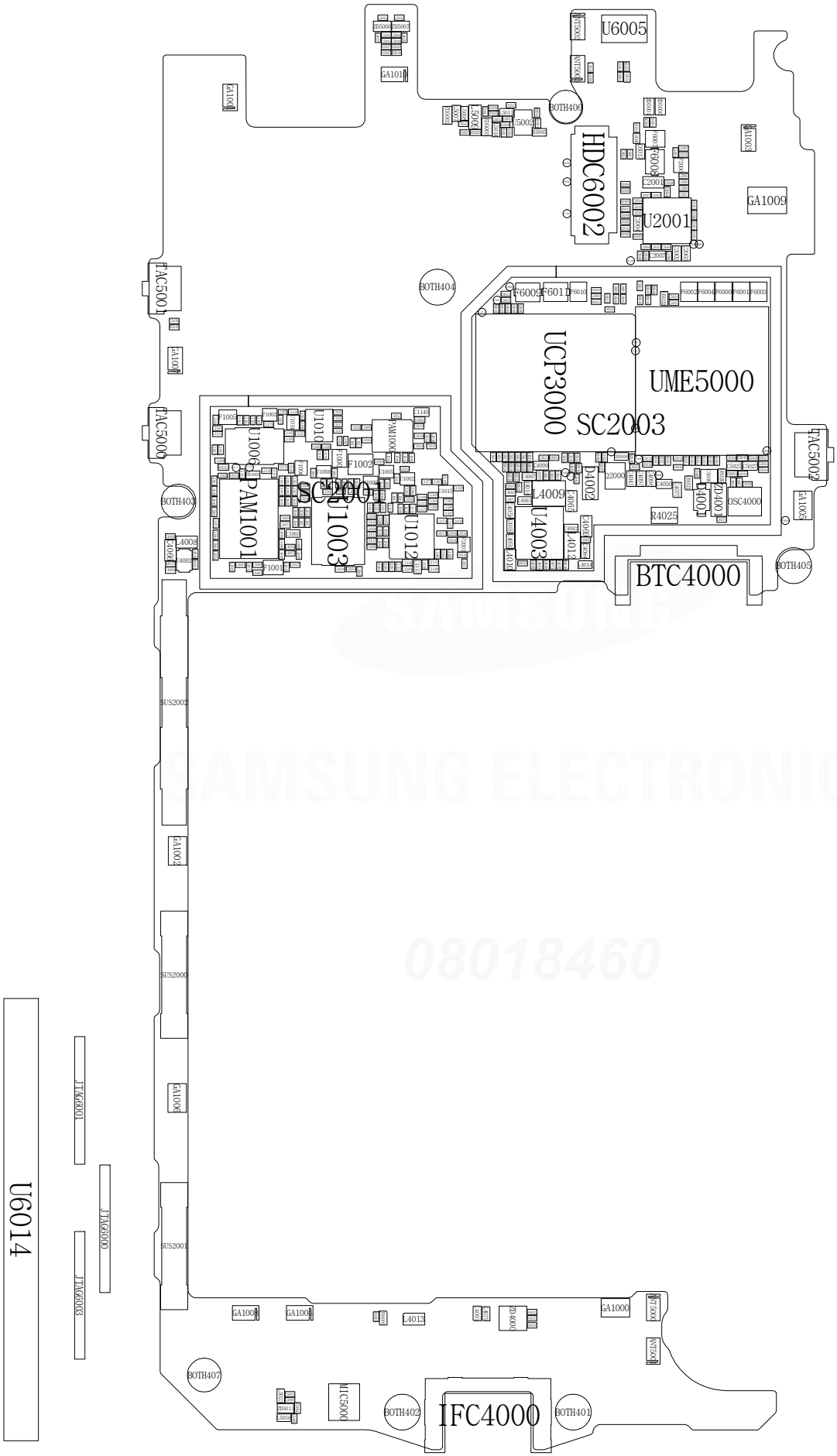

SAMSUNG ELECTRONICS
08018460

김영호08018460TELE|H/W개발1그룹(무선)**25250146 20160315184908

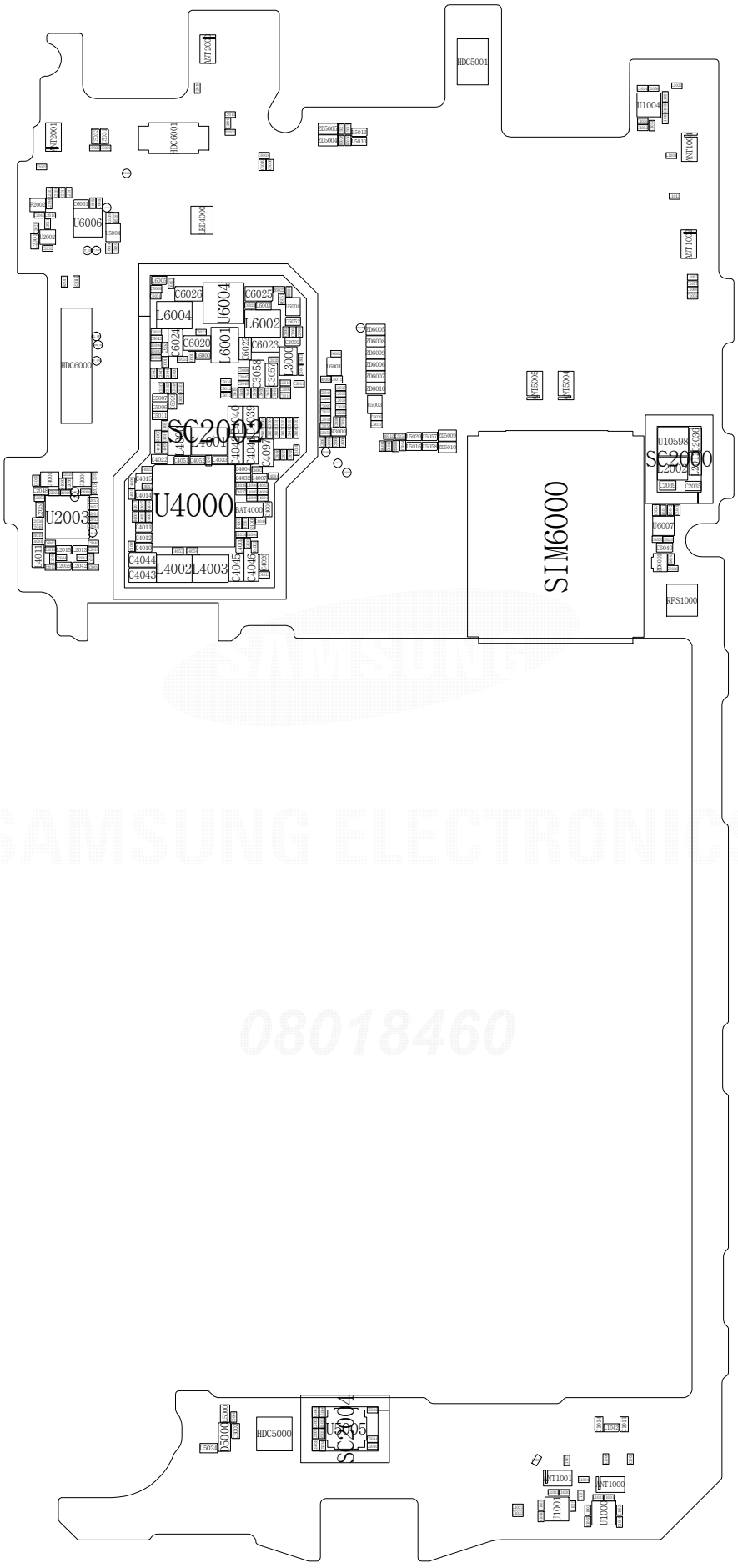

SAMSUNG ELECTRONICS
08018460

김영호08018460TELE|H/W개발1그룹(무선)**25250146 20160315184946