SAMSUNG CONFIDENTIAL
THIS DOCUMENT CONTAINS CONFIDENTIAL AND PROPRIETARY INFORMATION THAT IS SAMSUNG ELECTRONICS CO.'S PROPERTY. DO NOT DISCLOSE TO OR DUPLICATE FOR OTHERS EXCEPT AS AUTHORIZED BY SAMSUNG.

GT-I9500_MAIN_REV 0.7

2013.02.14

REFERENCE

sheet01 :	GSM / WCDMA	**100**
sheet03 :	CP(XMM6360)	**300**
sheet05 :	AP(ADONIS)	**5000**
sheet06 :	AP PMIC, IF PMIC	**600**
sheet07 :	CAM, LCD, MHL	**700**
sheet08 :	GPS, BT/WIFI, NFC, SENSOR HUB, SENSORS	**800**
sheet09 :	AUDIO	**900**
sheet10 :	CONNECTORS, BAR CODER	**1000**

Engineer		SAMSUNG ELECTRONICS	
Drawn by:			
R&D CHK:		TITLE: GT-I9500	SIZE: A1
DOC CTRL CHK:			
MFG ENGR CHK:			
Changed by:	Date Changed:	Time Changed:	QA CHK:
		Drawing Number	SHEET 00/07

SAMSUNG CONFIDENTIAL
THIS DOCUMENT CONTAINS CONFIDENTIAL INFORMATION AND PROPRIETARY TO SAMSUNG ELECTRONICS CO'S PROPERTY. DO NOT DISCLOSE TO OR DUPLICATE FOR OTHERS EXCEPT AS AUTHORISED BY SAMSUNG.

RF Part

2013.02.14

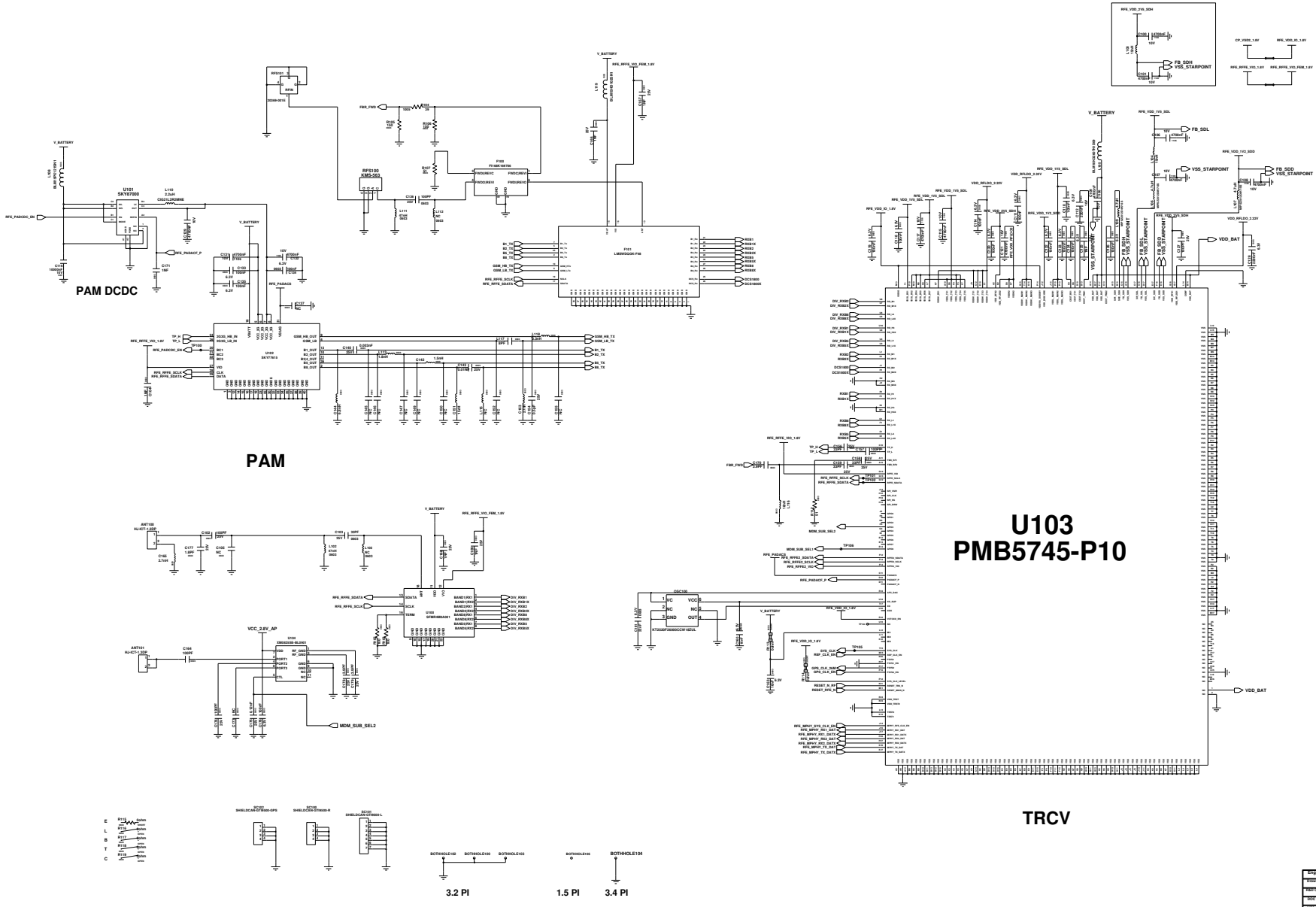

Engineer	
Issued By	RF
R&D CHK:	TITLE:
DOC CTRL CHK:	GT-I9500_REV0.7
RFG ENGR CHK:	
QA CHK:	Drawing Number

Changed By	Date Changed	Time Changed

SAMSUNG CONFIDENTIAL
THIS DOCUMENT CONTAINS CONFIDENTIAL INFORMATION AND PROPRIETARY TO SAMSUNG ELECTRONICS CO'S PROPERTY. DO NOT DISCLOSE TO OR DUPLICATE FOR OTHERS EXCEPT AS AUTHORIZED BY SAMSUNG.

CONNECTOR

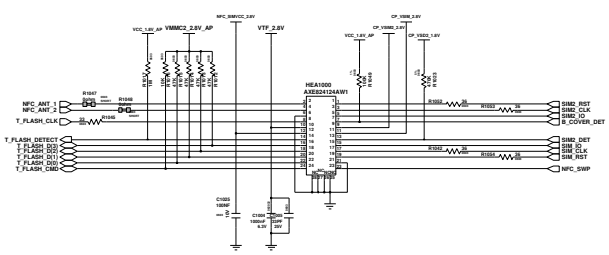

SIM/SD CON

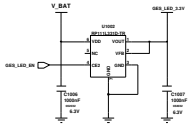

Gesture Sensor LDO

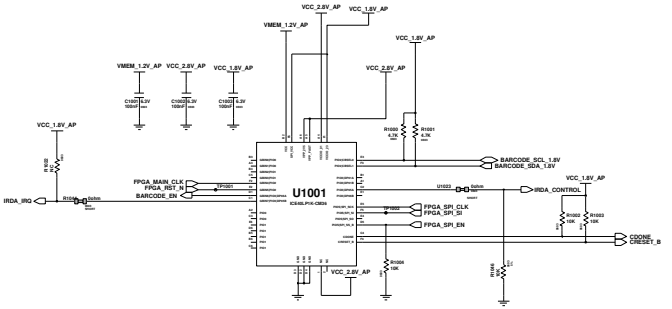

BAR CODER

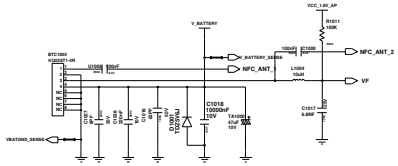

Battery Connector

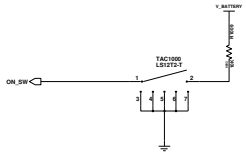

PWR key

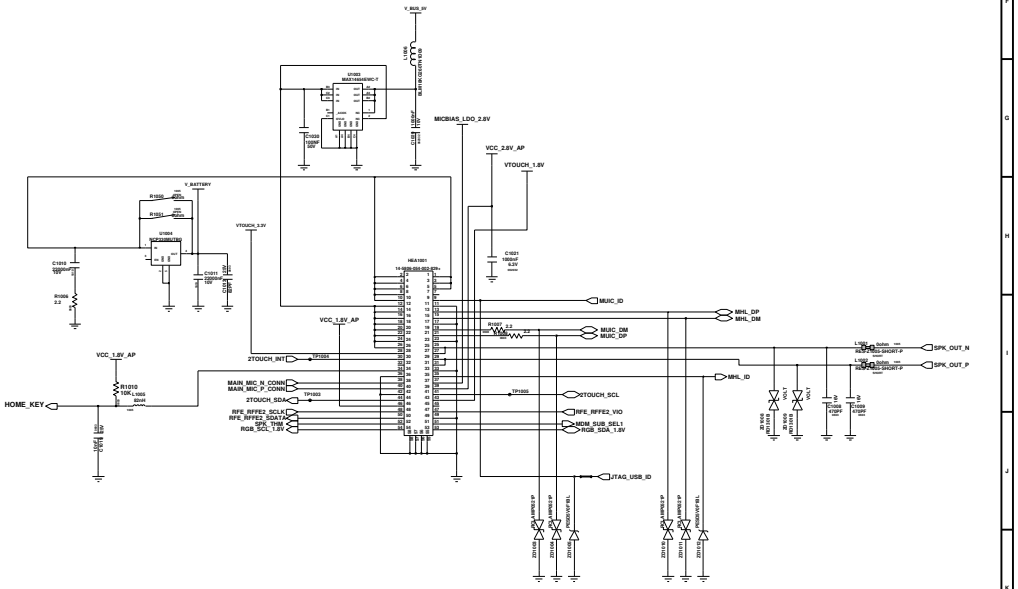

SUB PCB CON.

Engineer			
Issued By:			
R&D CHK:	TITLE:		SIZE: A1
DOC CTRL CHK:	GT-I9500_REV0.7		
BPG ENGR CHK:			
QA CHK:	Drawing Number:		03/07

Changed By:	Date Changed:	Time Changed:

SAMSUNG CONFIDENTIAL
THIS DOCUMENT CONTAINS CONFIDENTIAL AND PROPRIETARY INFORMATION OF SAMSUNG ELECTRONICS CO'S PROPERTY. DO NOT DISCLOSE TO OR DUPLICATE FOR OTHERS EXCEPT AS AUTHORIZED BY SAMSUNG.

CP Part (XMM6360)

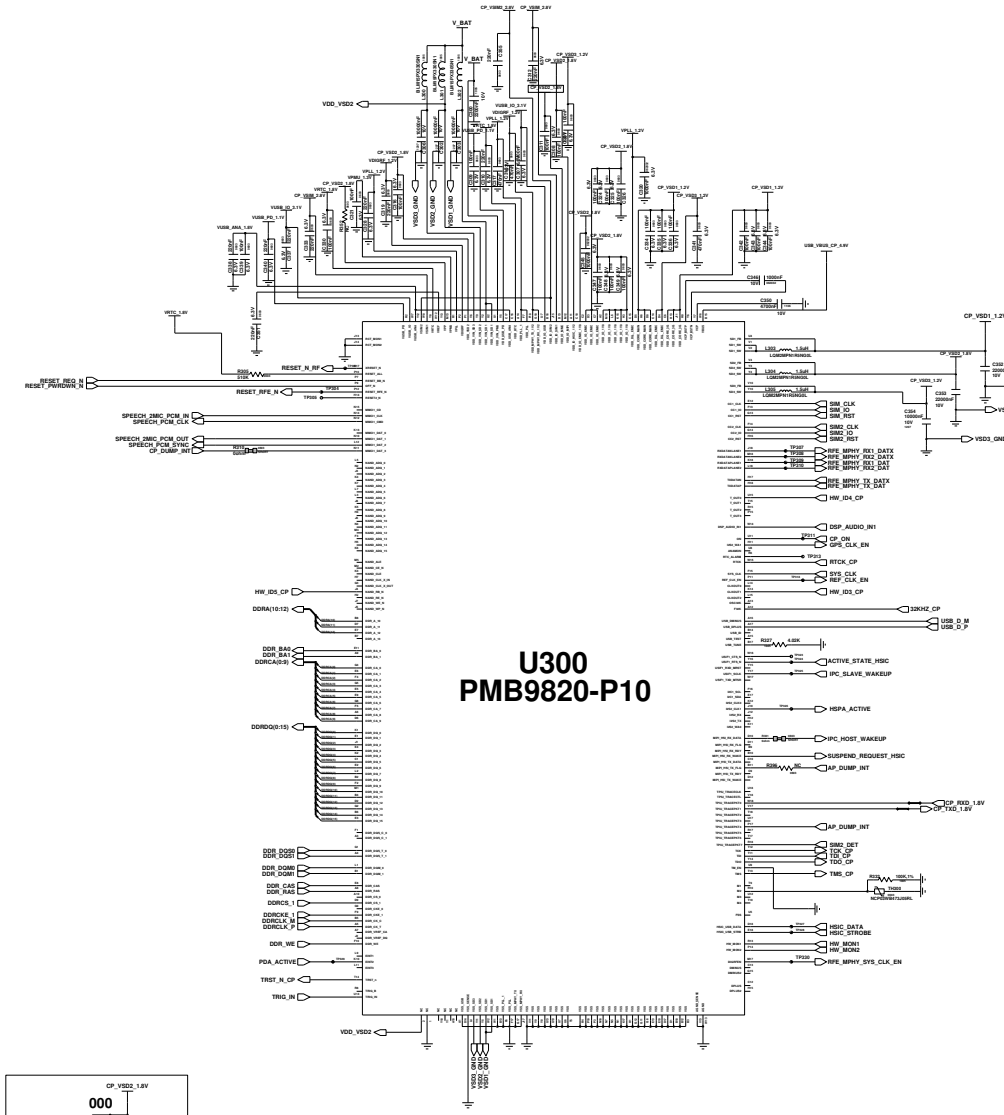

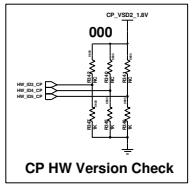

CP HW Version Check

BOOT MODE

boot cfg	DSP_AUDIO_IN1	HW_MON1	HW_MON2	TRIG_IN	Description
0 1	0	0	0	1	DDR(NVM/EMMC)
0 3	0	0	1	1	C2C 1(1RX / 8TX)
0 4	0	1	0	0	C2C 2(16RX / 16TX)
0 5	0	1	0	1	NAND FLASH(NANDCTRL)
0 9	1	0	0	1	EMMC(SDMMC1)
1 2	1	1	0	0	FLASHLESS BOOT, BB chip set to C2C 2
1 3	1	1	0	1	FLASHLESS BOOT, BB chip set to C2C 1
1 4	1	1	1	0	FLASHLESS BOOT, BB chip set to EMC

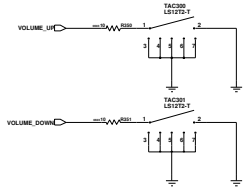

VOL KEY

Eng Chief:		SAMSUNG ELECTRONICS			
PSPT DL:					
HW CHK:		TITLE:		SIZE: A1	
DOC CTRL CHK:		GT-I9500_REV0.7			
Pro LNGR CHK:					
CHANGED BY:	DATE CHANGED:	TIME CHANGED:	QA CHK:	REV:	Drawing Number:
[illegible]	Thursday, June 13, 2013	[illegible]			

user02|ecad2|10.244.89.250|20130316-134642

SAMSUNG CONFIDENTIAL
SAMSUNG ELECTRONICS CO'S PROPERTY
SAMSUNG ELECTRONICS CO'S CONFIDENTIAL
DO NOT COPY OR DISCLOSE TO THIRD PARTY
ACCESS TO ATTACHED BY SAMSUNG

EXYNOS5410, MOVINAND+DDR

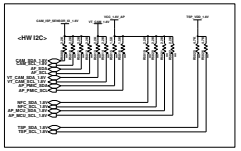

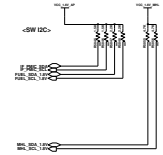

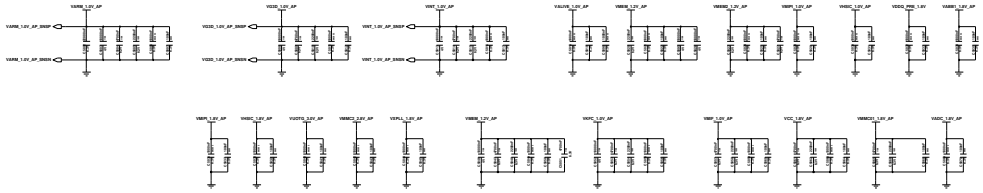

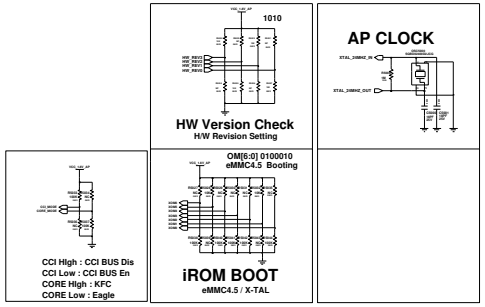

OM[6:0] 0100100	RESERVED
OM[6:0] 0101000	1st eMMC4.5, 2nd SDMMC
OM[6:0] 0001000	1st eMMC4.5, 2nd USB
OM[6:0] 0001010	1st EFNAND, 2nd USB
OM[6:0] 0000100	1st SDMMC, 2nd USB

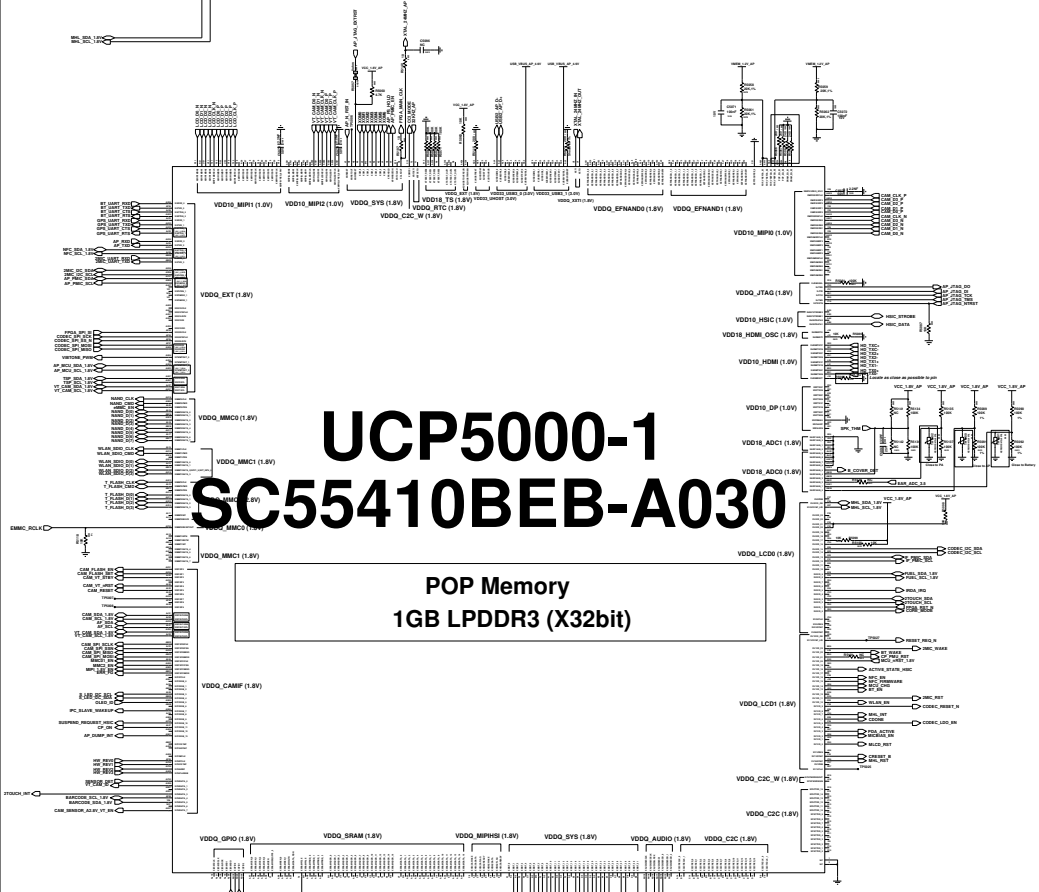

UCP5000-1
SC55410BEB-A030

POP Memory
1GB LPDDR3 (X32bit)

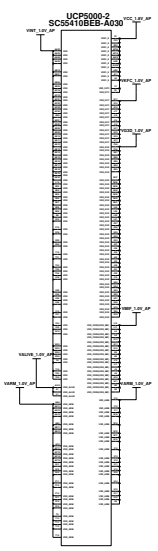

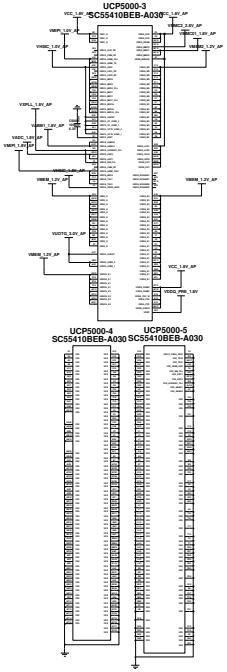

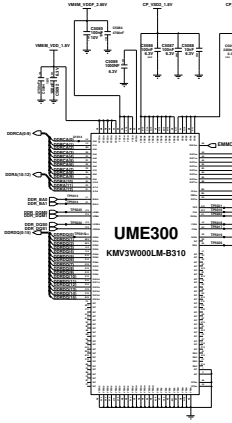

moviNand + DDR(16GB + 512Mb)

Needed to be changed to eMCP5.0

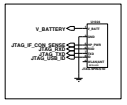

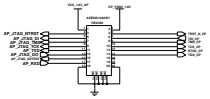

AP/CP JTAG

SAMSUNG CONFIDENTIAL
THIS DOCUMENT CONTAINS CONFIDENTIAL INFORMATION AND IS THE PROPERTY OF SAMSUNG ELECTRONICS CO.,LTD. PROPERTY. DO NOT DISCLOSE TO OR DUPLICATE FOR OTHERS EXCEPT AS AUTHORIZED BY SAMSUNG.

PMIC Part

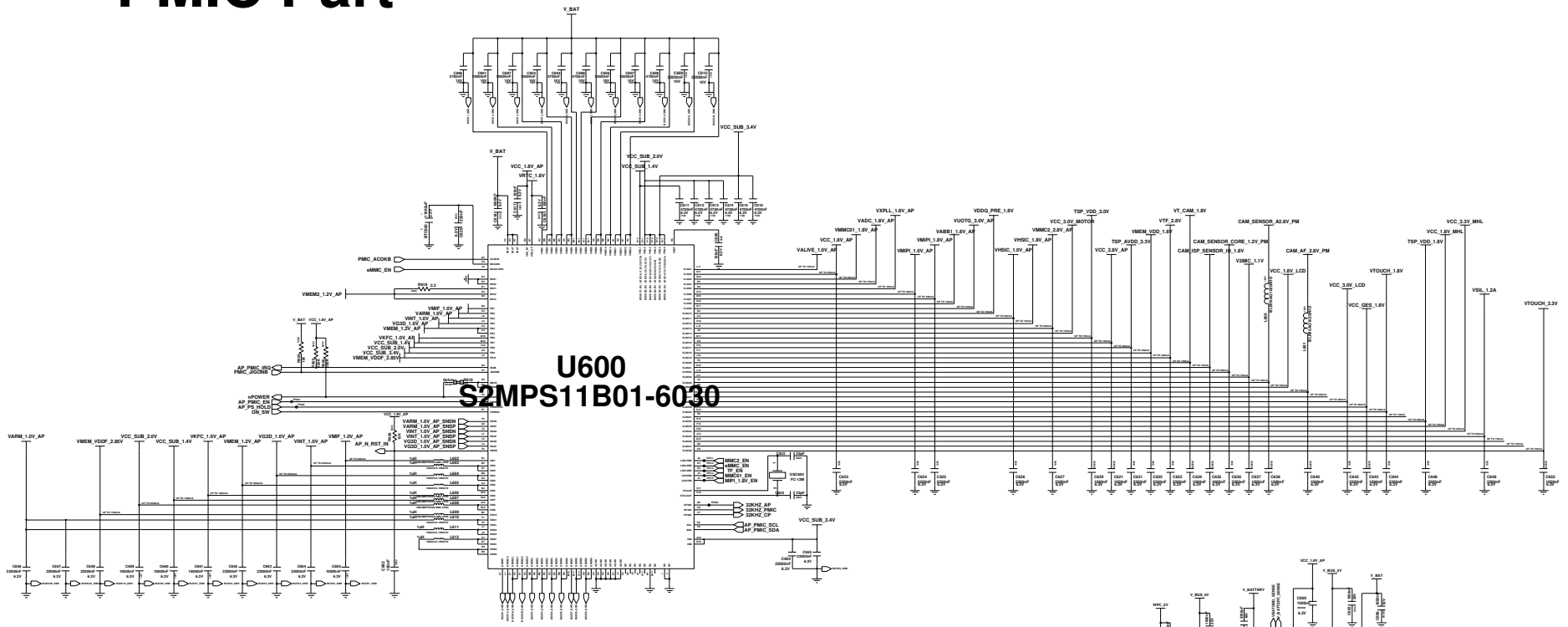

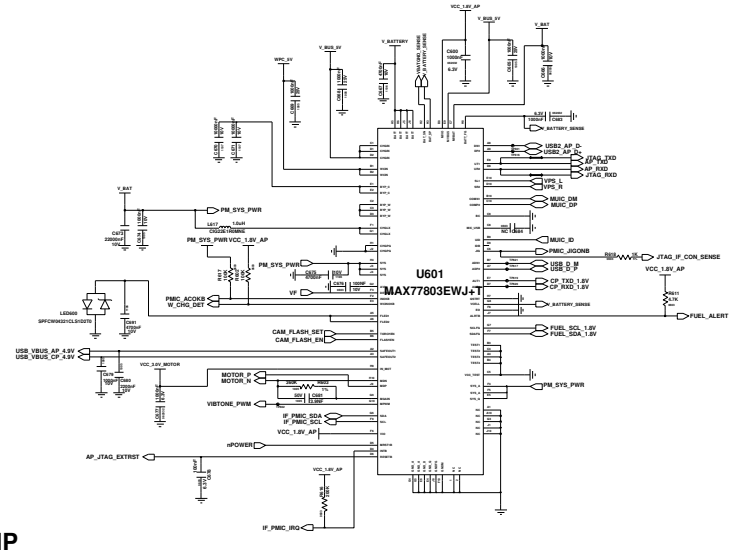

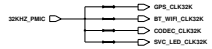

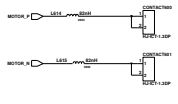

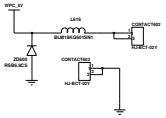

MOTOR PAD

IF CHIP

(CHARGER, WIRELESS CHARGING SWITCH+OVP, OTG, FLESH LED DR.IC, FUEL GAUGE, MUIC, PWR PATH SEPARATION, MOTOR DR.IC)

Engineer	
Issued By	
R&D CHK.	TITLE: GT-I9500_REV0.7
DOC CTRL CHK.	
BPG ENGR CHK.	
QA CHK.	Drawing Number: 09/07

Changed By	Date Changed	Time Changed

SAMSUNG CONFIDENTIAL
THIS DOCUMENT CONTAINS CONFIDENTIAL
PROPRIETARY INFORMATION THAT IS
SAMSUNG ELECTRONICS CO'S PROPERTY.
DO NOT DISCLOSE TO OR DUPLICATE FOR OTHERS
EXCEPT AS AUTHORIZED BY SAMSUNG.

CAMERA PART

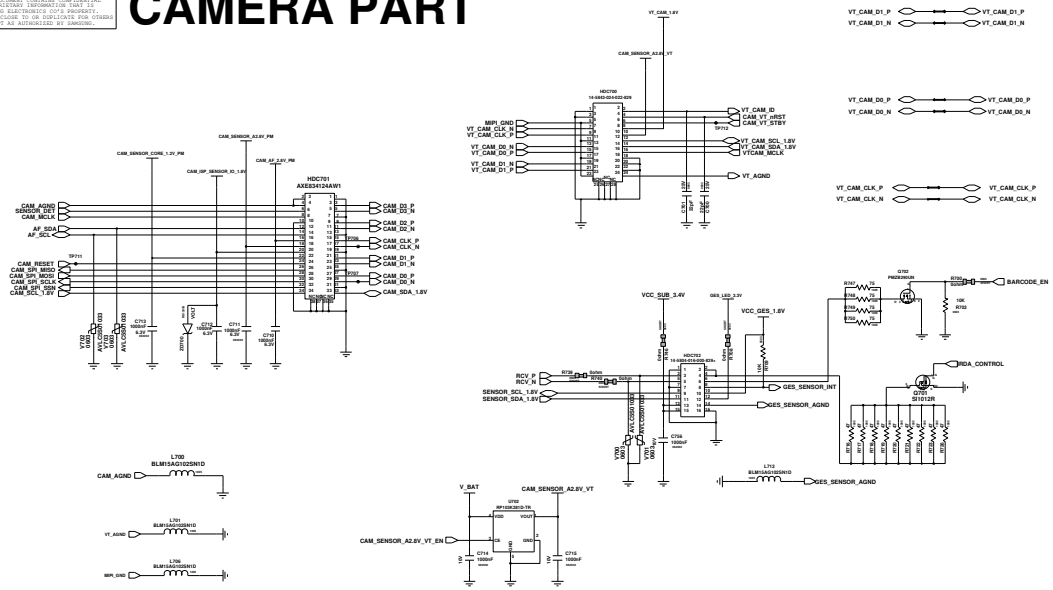

MHL PART

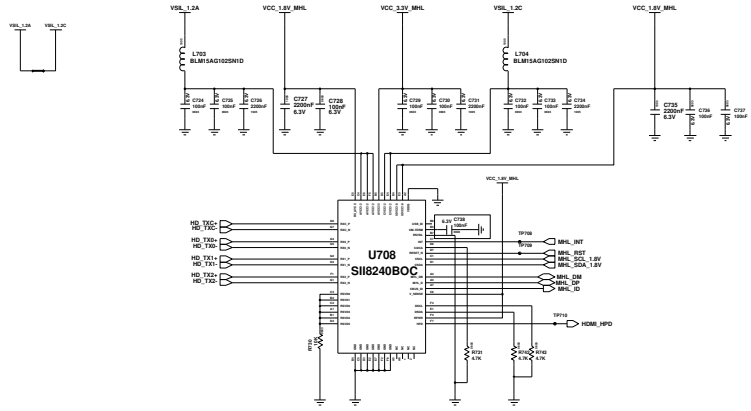

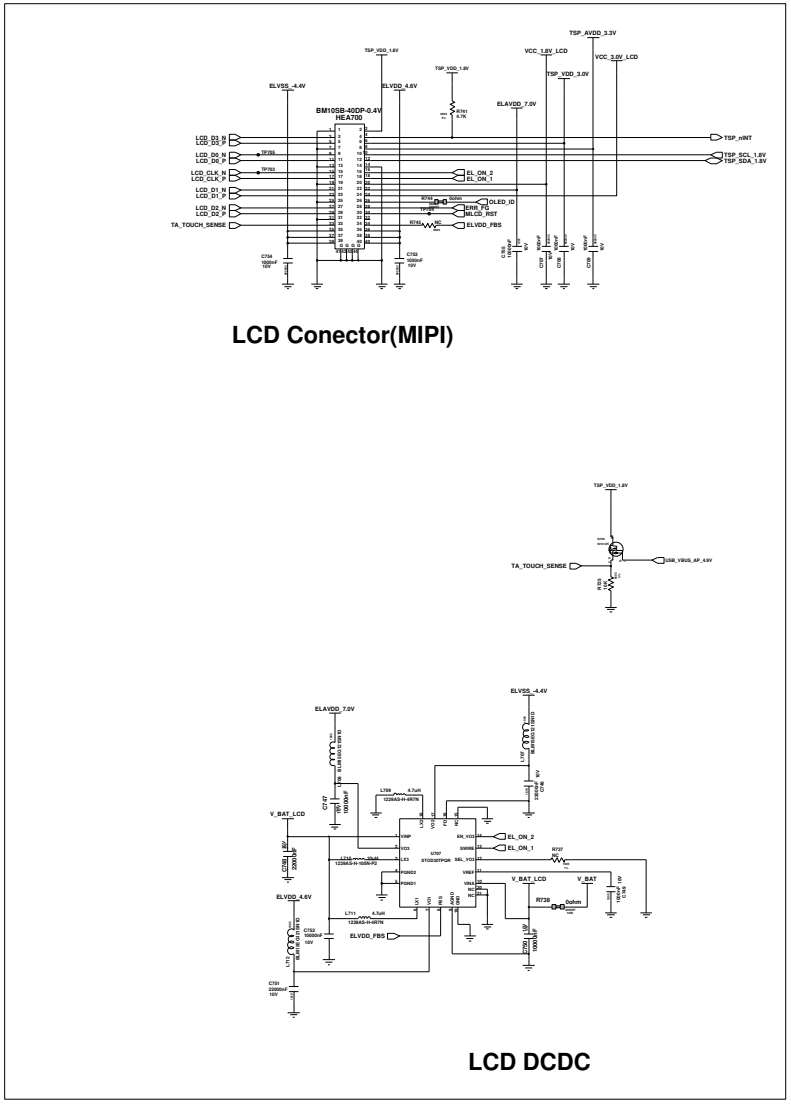

Engineer: jack			
Drawn by: jack			
R&D CHK:		TITLE:	
DOC CTRL CHK:			SIZE: A1
MFG ENGR CHK:		GT-I9500_REV0.7	
Changed by: jack	Date Changed: Monday, November 23, 2009	Time Changed: 9:49:19 am	QA CHK:
REV:	Drawing Number:		07/07

user02|ecad2|10.244.89.250|20130316-134646

SAMSUNG CONFIDENTIAL
THIS DOCUMENT CONTAINS CONFIDENTIAL
PROPRIETARY INFORMATION THAT IS
SAMSUNG ELECTRONICS CO'S PROPERTY.
DO NOT DISCLOSE TO OR DUPLICATE FOR OTHERS
EXCEPT AS AUTHORIZED BY SAMSUNG.

GPS

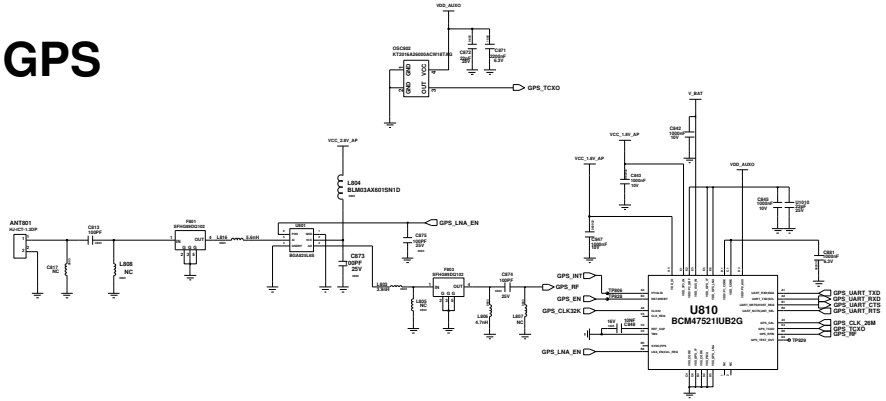

GPS(BCM47521)

BT/WIFI

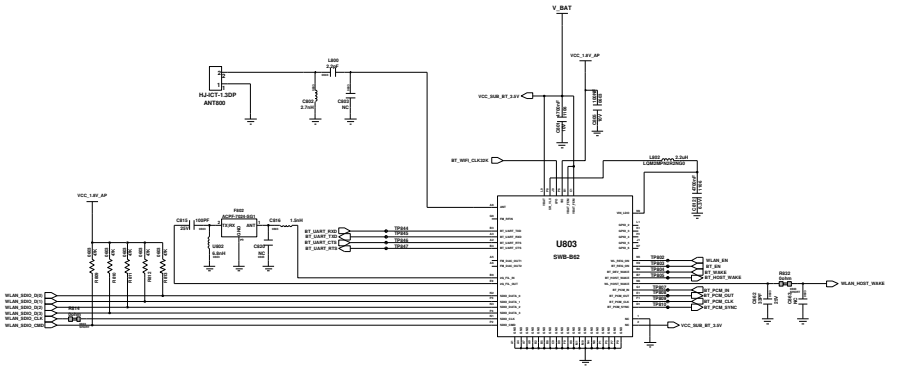

BT / WIFI

SENSOR HUB

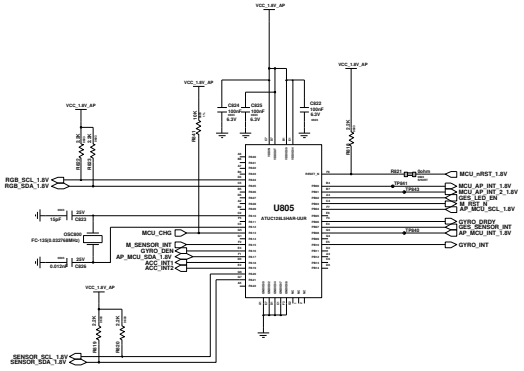

NFC

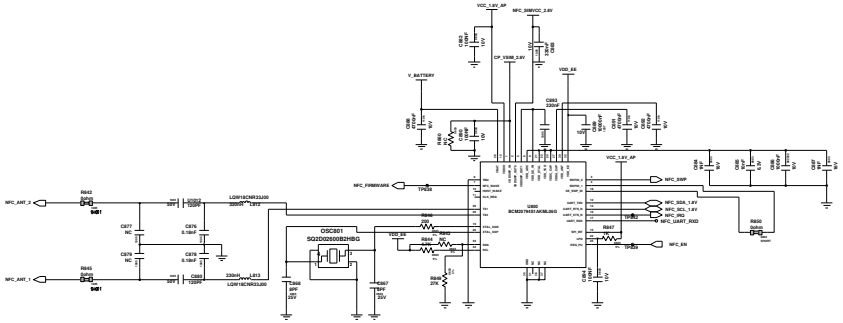

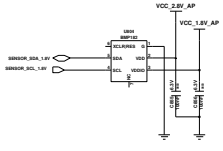

Barometer Sensor

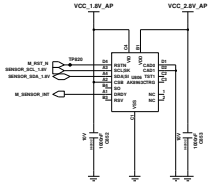

Magnetic Sensor

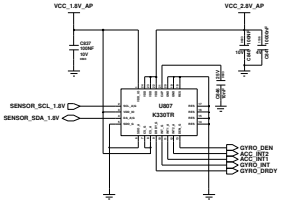

6 Axics Sensor (GYRO,ACCEL)

Engineer			
Drawn by:			
R&D CHK:	TITLE:		Size: A1
DOC CTRL CHK:	GT-I9500_REV0.7		
MFG ENGR CHK:			
Changed by:	Date Changed:	Time Changed:	QA CHK:
			Drawing Number: 03/07

user02|ecad2|10.244.89.250|20130316-134648

SAMSUNG CONFIDENTIAL
THIS DOCUMENT CONTAINS CONFIDENTIAL
PROPRIETARY INFORMATION THAT IS
SAMSUNG ELECTRONICS CO'S PROPERTY.
DO NOT DISCLOSE TO OR DUPLICATE FOR OTHERS
EXCEPT AS AUTHORIZED BY SAMSUNG.

AUDIO

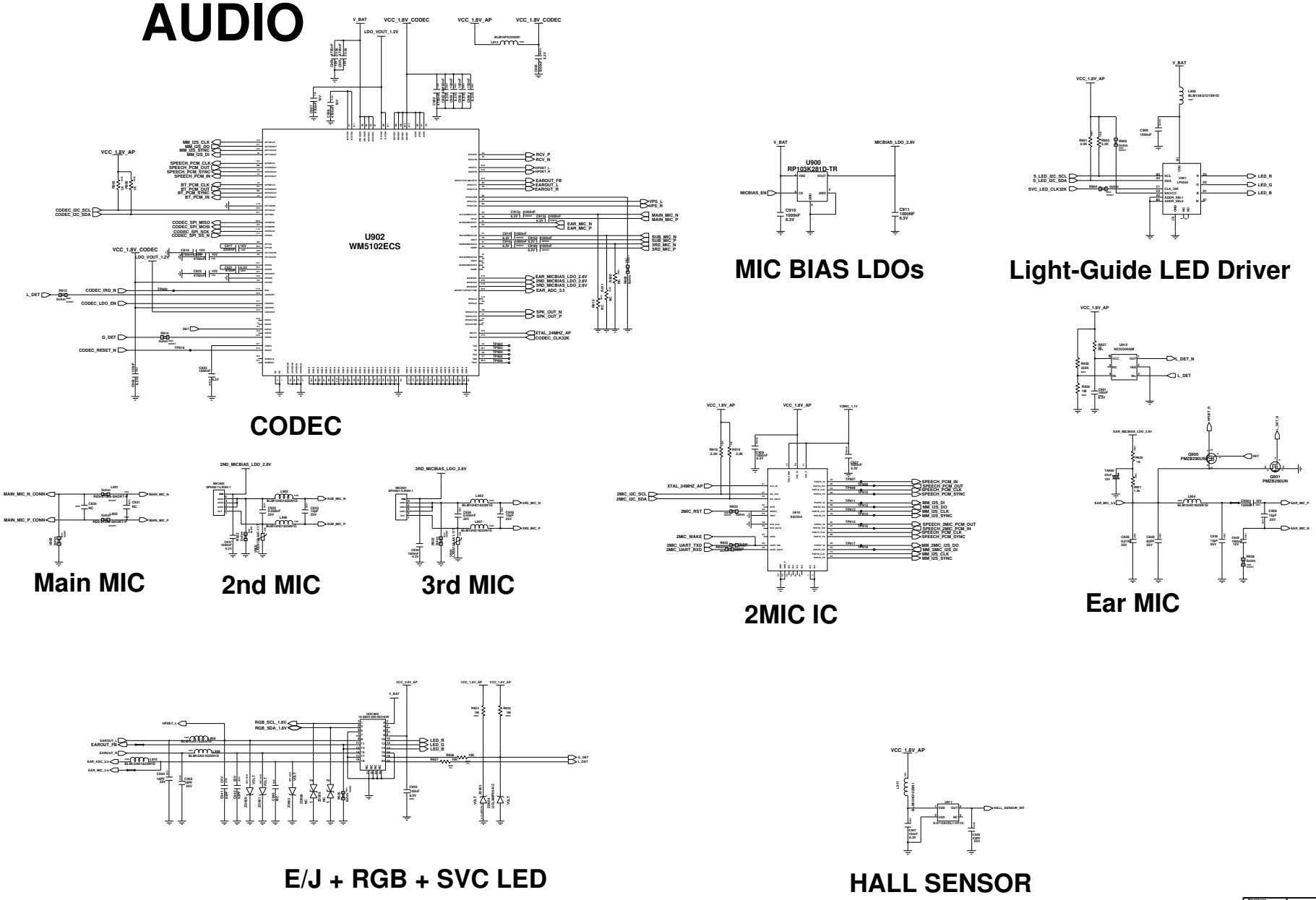

Engineer	
Drawn by:	
R&D CHK:	TITLE:
DOC CTRL CHK:	GT-I9500_REV0.7
MFG ENGR CHK:	
Changed by:	Date Changed:
Time Changed:	QA CHK:
Drawing Number	06/07

user02|ecad2|10.244.89.250|20130316-134650

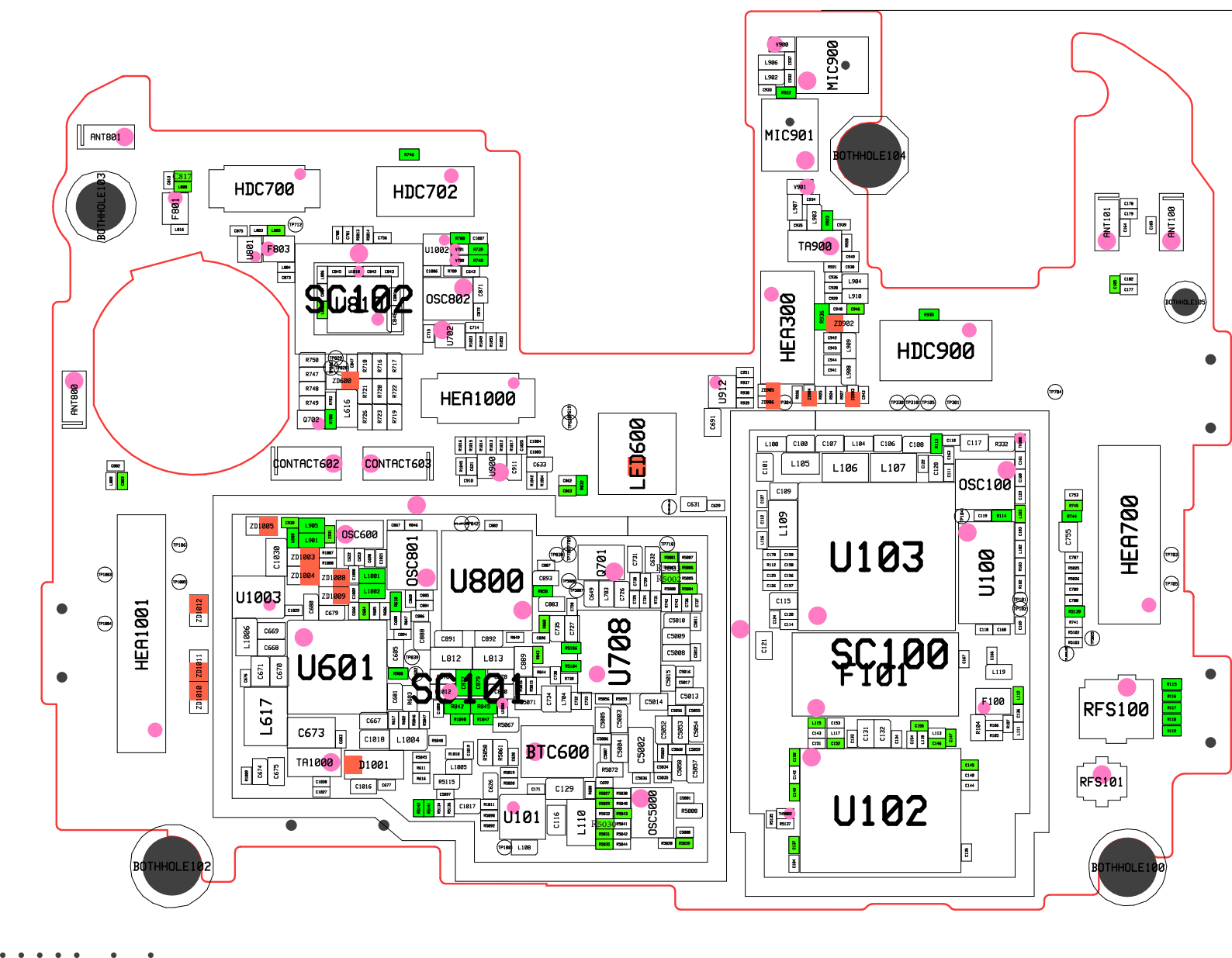

ANT801
BOTHHOLE103
HDC700
HDC702
F801
F803
U801
U1002
SC102
OSC802
U702
ZD600
Q702
L616
HEA1000
ANT800
CONTACT602
CONTACT603
U900
LED600
U912
MIC900
MIC901
BOTHHOLE104
TA900
HEA300
ZD902
HDC900
ANT101
ANT100
BOTHHOLE105
HEA700
U103
OSC100
U100
SC100
F101
F100
U102
RFS100
RFS101
BOTHHOLE100
HEA1001
ZD1012
ZD1011
ZD1010
U1003
U601
L617
C673
TA1000
D1001
OSC600
OSC801
U800
SC101
U708
Q701
BTC600
U101
OSC5000
BOTHHOLE102

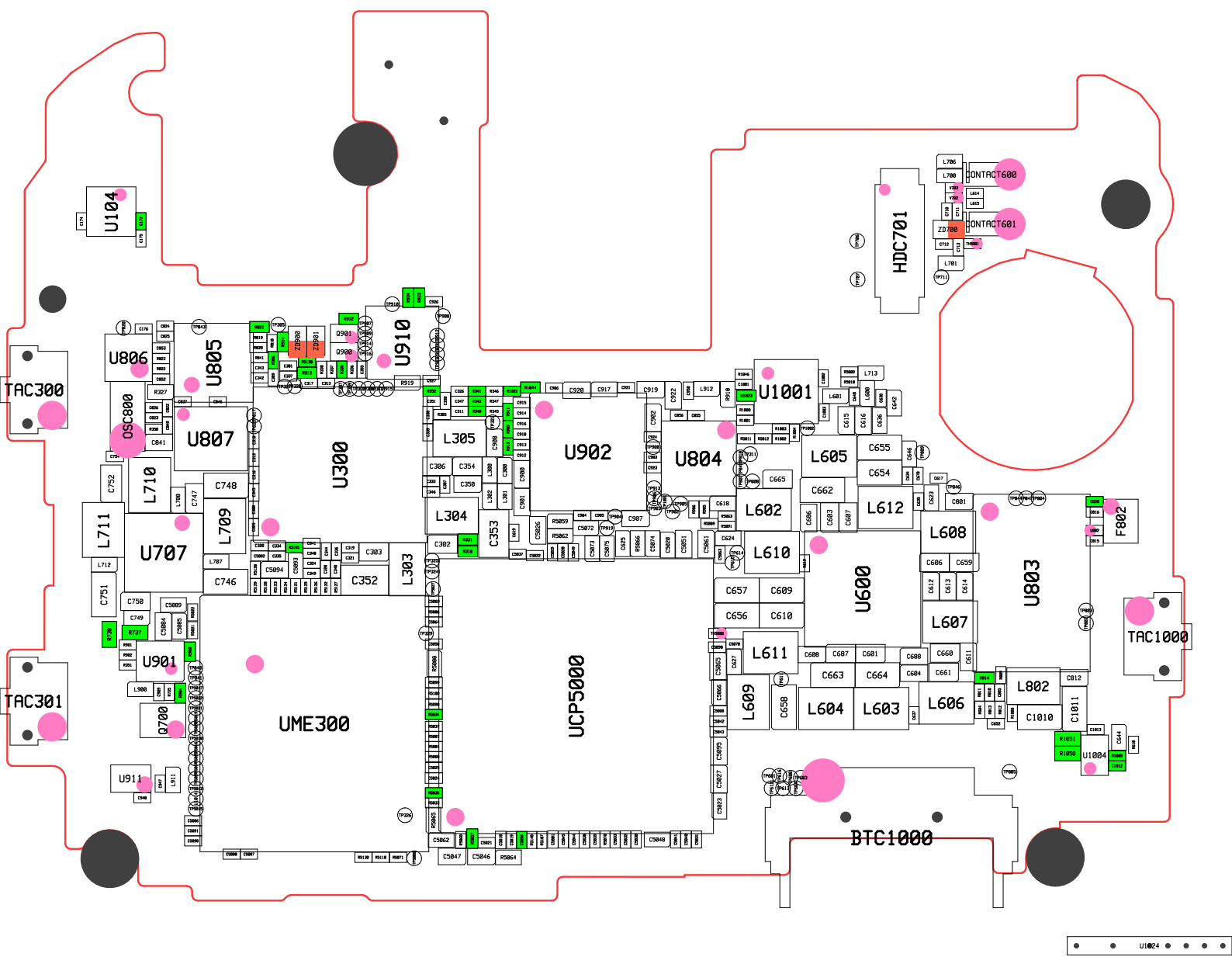

U104
TAC300
U806
U805
OSC800
U807
U910
U300
L305
U902
U804
U1001
HDC701
CONTACT600
CONTACT601
L605
L602
L612
L608
L610
U600
U803
F802
TAC1000
L607
L611
L609
L604
L603
L606
L802
C1010
C1011
U1004
BTC1000
L710
L711
U707
L709
C748
C746
C752
C751
C750
C749
U901
Q700
U911
TAC301
UME300
UCP5000
L304
C353
C352
L303
C302
C303
C306
C354
C350
C308
C900
C901
C920
C917
C919
C922
L912
C665
C662
C654
C655
C657
C609
C656
C610
C663
C664
C661
C658
C1011
U1024