SAMSUNG CONFIDENTIAL
THIS DOCUMENT CONTAINS CONFIDENTIAL PROPRIETARY INFORMATION THAT IS SAMSUNG ELECTRONICS CO'S PROPERTY. DO NOT DISCLOSE TO OR DUPLICATE FOR OTHERS EXCEPT AS AUTHORIZED BY SAMSUNG.

ROSELA LABS

SM-A510M REV0.2

2015.11.10

sheet01 : GSM / WCDMA / LTE RF (MAIN)
sheet02 : GSM / WCDMA / LTE RF (SUB)
sheet03 : GPS, BT/WIFI, NFC
sheet04 : AP
sheet05 : PMIC, eMMC, IF PMIC, SIM&SD, MST, MOTOR, BAT CON
sheet06 : AUDIO, BTP, MST
sheet07 : CAMERA, OCTA, SENSOR, IF CON

Samsung Confidential

REV0.1
REV0.2

Engineer
Drawn by:
R&D CHK:
DOC CTRL CHK:
MFG ENGR CHK:
TITLE:
Size: A1
Changed by:
Date Changed:
Time Changed:
QA CHK:
Drawing Number
3/9

user77|swcad77|10.253.15.69|20151110-215006

SAMSUNG CONFIDENTIAL
THIS DOCUMENT CONTAINS CONFIDENTIAL AND PROPRIETARY INFORMATION OF SAMSUNG ELECTRONICS CO.'S PROPERTY. DO NOT DISCLOSE TO OR DUPLICATE FOR OTHERS EXCEPT AS AUTHORIZED BY SAMSUNG.

#1 RF

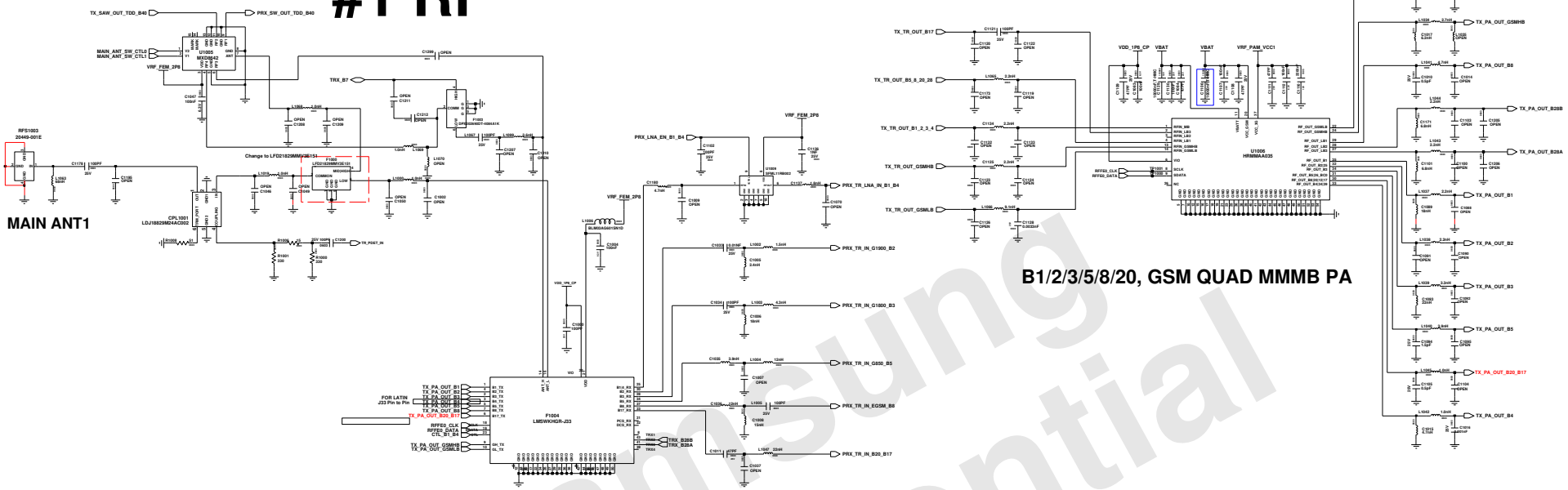

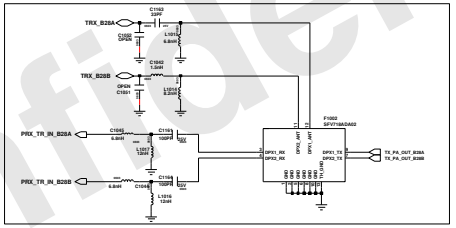

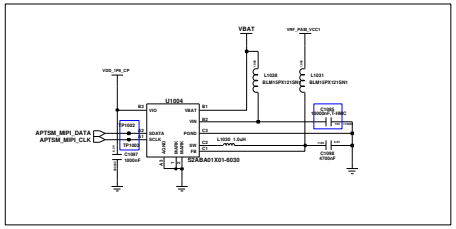

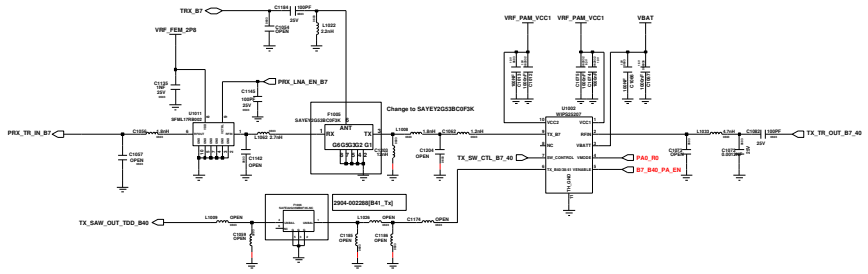

1) SM-510F_CIS_EUR_MEA_SEA_SWA

GSM850/900/G1800/G1900
WCMA:W1/W2/W5/W8
LTE:B1/B3/B5/B7/B8/B20/B40

2) SM-A510F_Y_XX_SEA_ZT

GSM850/900/G1800/G1900
WCMA:W1/W2/W5/W8
LTE:B1/B3/B5/B7/B28/B38/B41

Samsung Confidential

RF

SAMSUNG CONFIDENTIAL
THIS DOCUMENT CONTAINS CONFIDENTIAL PROPRIETARY INFORMATION THAT IS SAMSUNG ELECTRONICS CO'S PROPERTY. DO NOT DISCLOSE TO OR DUPLICATE FOR OTHERS EXCEPT AS AUTHORIZED BY SAMSUNG.

DRX

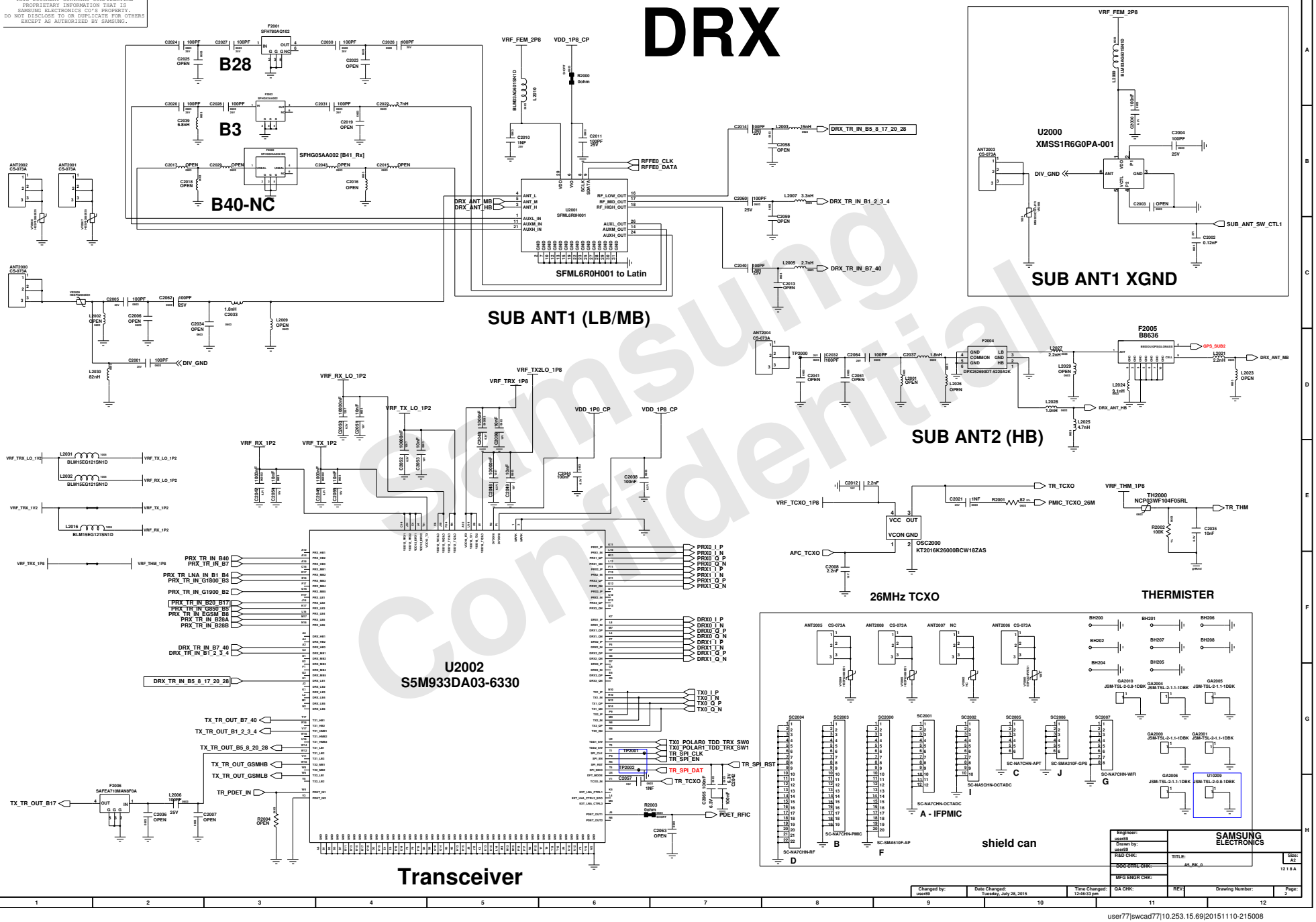

Samsung Confidential

SAMSUNG CONFIDENTIAL
THIS DOCUMENT CONTAINS CONFIDENTIAL
AND PROPRIETARY INFORMATION OF
SAMSUNG ELECTRONICS CO'S PROPERTY.
NO NOT DISCLOSE TO OR DUPLICATE FOR OTHERS
EXCEPT AS AUTHORIZED BY SAMSUNG.

< GPS >

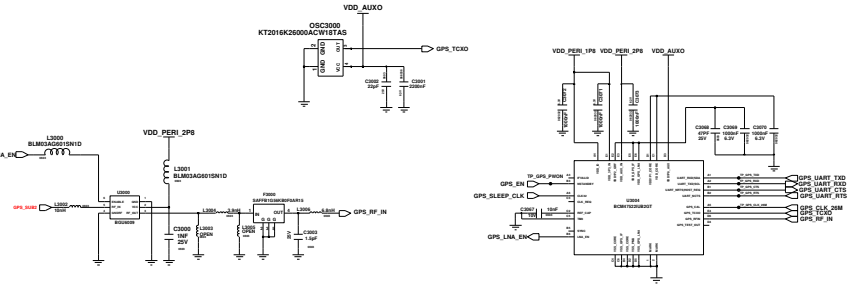

<NFC>

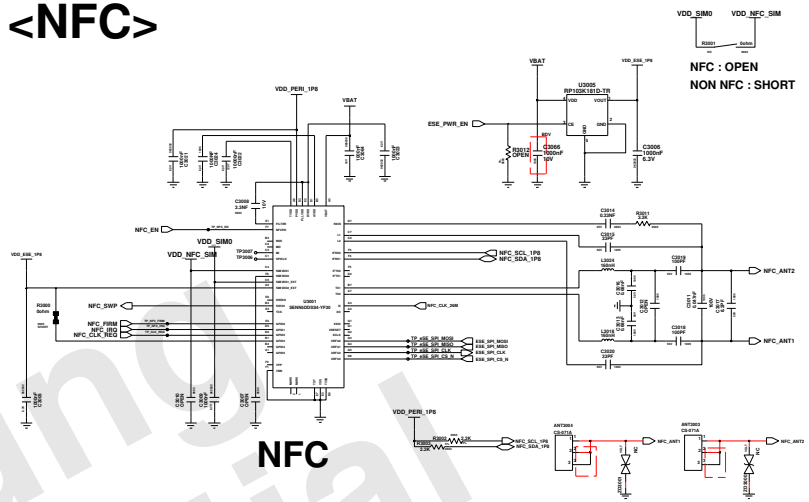

<BT/WIFI>

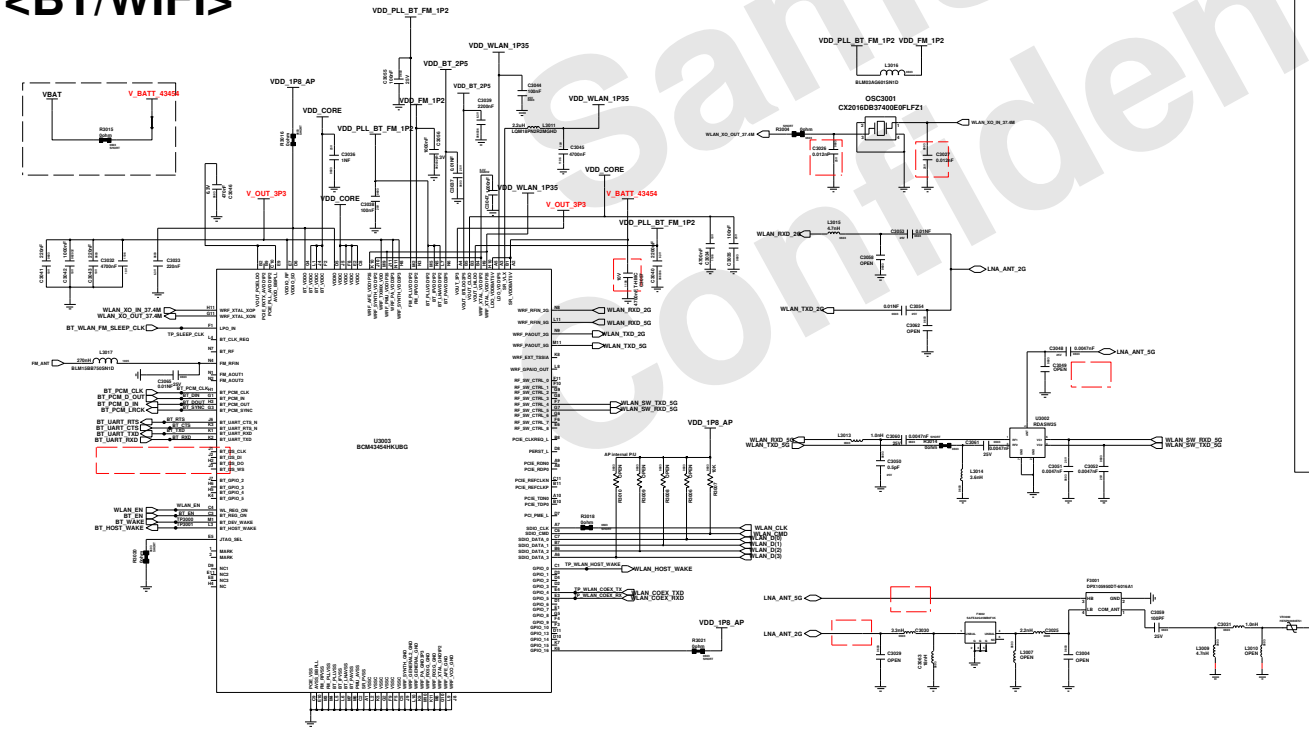

<TDMB_KOR>

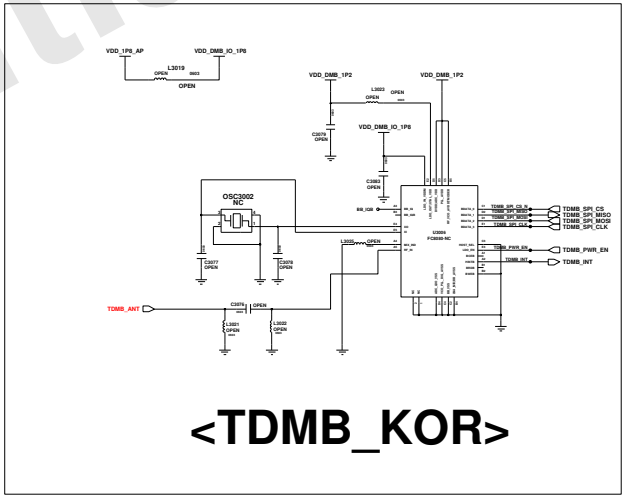

GPS / NFC / BT / WIFI

Samsung Confidential

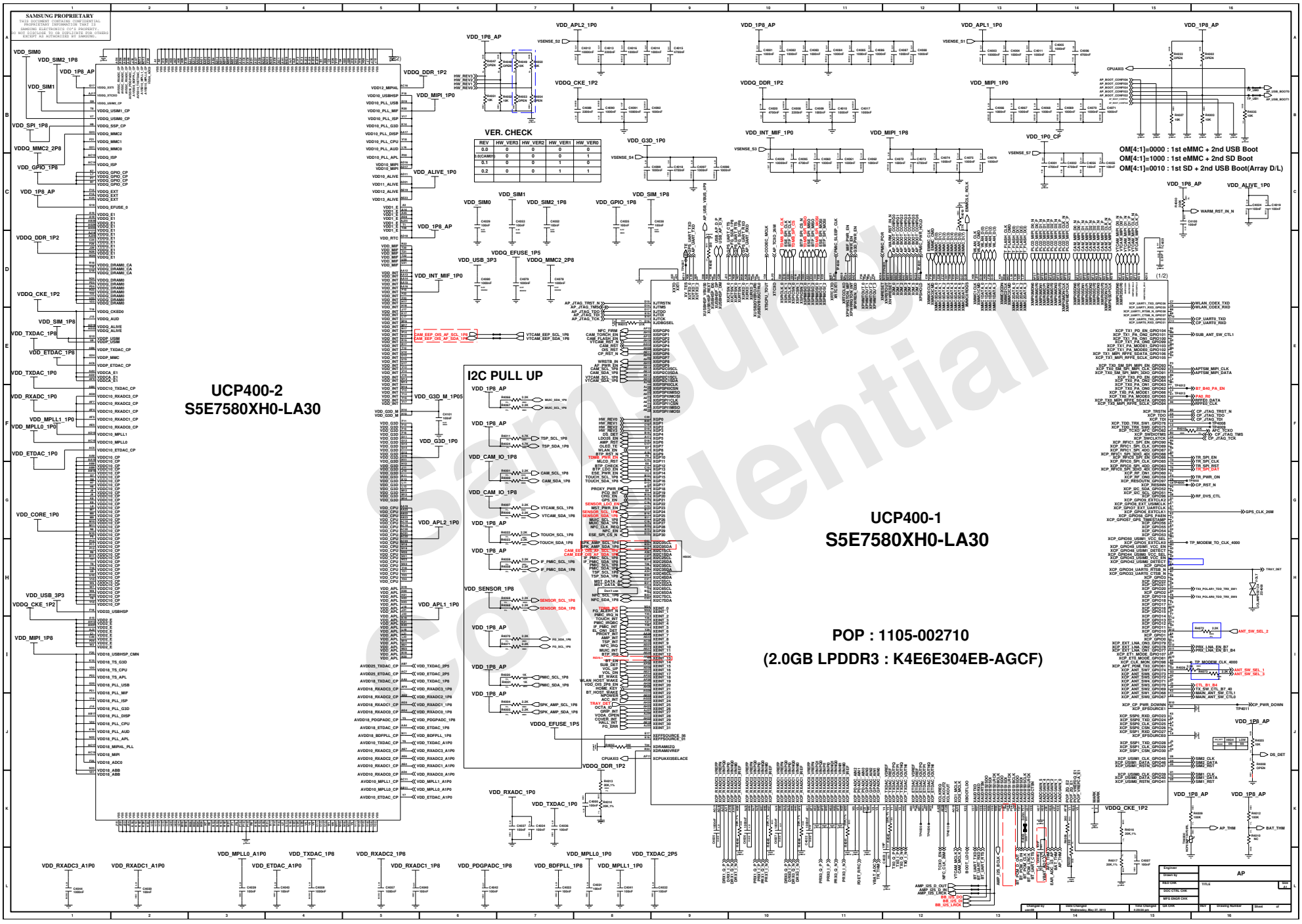
SAMSUNG PROPRIETARY
THIS DOCUMENT CONTAINS CONFIDENTIAL PROPRIETARY INFORMATION THAT IS SAMSUNG ELECTRONICS CO'S PROPERTY. DO NOT DISCLOSE TO OR DUPLICATE FOR OTHERS EXCEPT AS AUTHORIZED BY SAMSUNG.
UCP400-2
S5E7580XH0-LA30
UCP400-1
S5E7580XH0-LA30
POP : 1105-002710
(2.0GB LPDDR3 : K4E6E304EB-AGCF)
I2C PULL UP
VER. CHECK
REV | HW_VER3 | HW_VER2 | HW_VER1 | HW_VER0
0.0 | 0 | 0 | 0 | 0
0.3(CAMD) | 0 | 0 | 0 | 1
0.1 | 0 | 0 | 1 | 0
0.2 | 0 | 0 | 1 | 1
OM[4:1]=0000 : 1st eMMC + 2nd USB Boot
OM[4:1]=1000 : 1st eMMC + 2nd SD Boot
OM[4:1]=0010 : 1st SD + 2nd USB Boot(Array D/L)
Samsung Confidential
AP

SAMSUNG CONFIDENTIAL

POWER

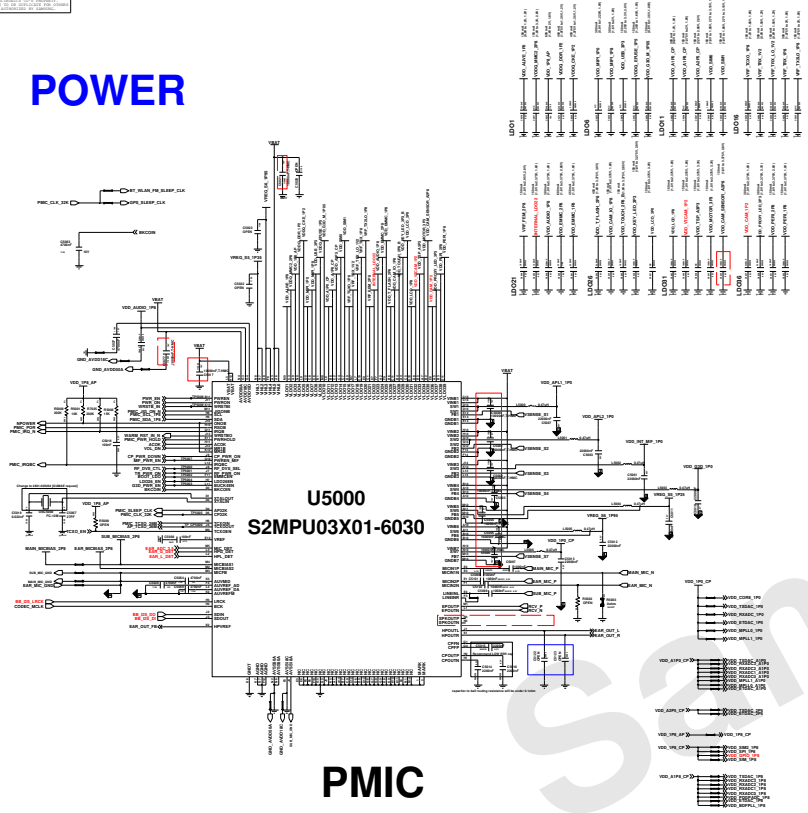

U5000
S2MPU03X01-6030

PMIC

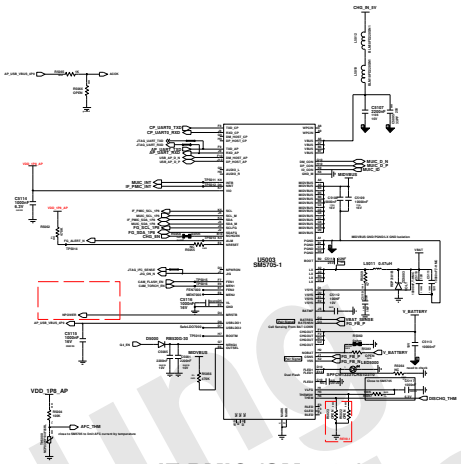

IF PMIC (SM5705)

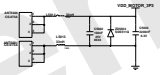

MOTOR(9pi 3.4T) LDO & CON

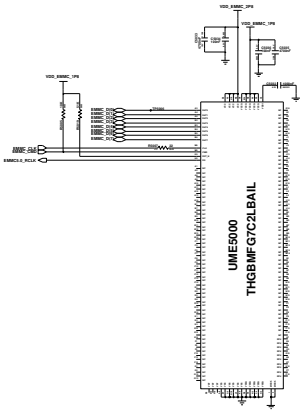

UME5000
THGBMFG7C2LBAIL

16GB eMMC 5.0 MLC

SIM & SD

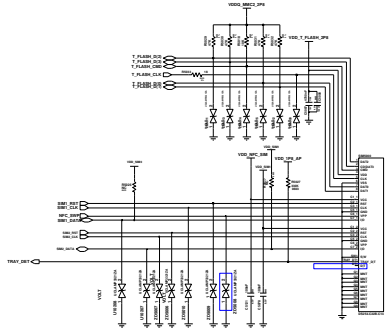

Battery Connector

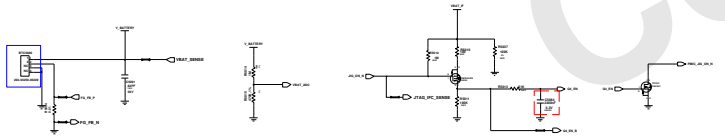

MST

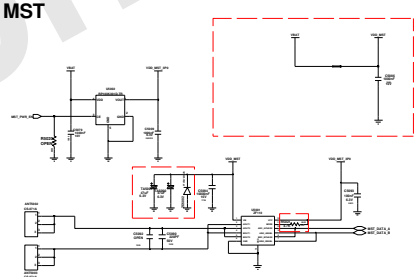

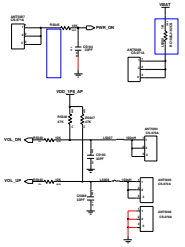

PWR KEY / VOL KEY

PCB JTAG

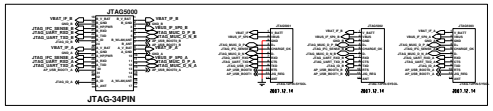

JTAG-34PIN

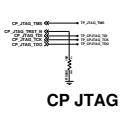

CP JTAG

AP JTAG

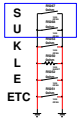

S U K L E ETC

Samsung Confidential

SAMSUNG CONFIDENTIAL
THIS DOCUMENT CONTAINS CONFIDENTIAL
PROPRIETARY INFORMATION THAT IS
SAMSUNG ELECTRONICS CO'S PROPERTY.
DO NOT DISCLOSE TO OR DUPLICATE FOR OTHERS
EXCEPT AS AUTHORIZED BY SAMSUNG.

AUDIO

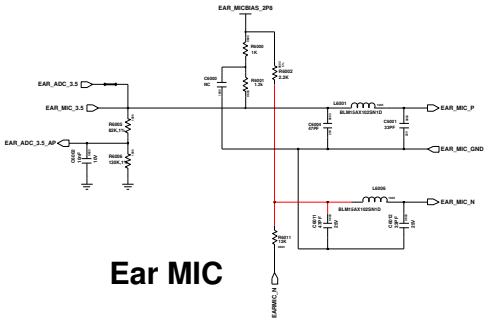

Ear MIC

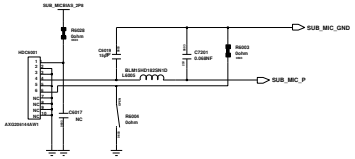

SUB MIC

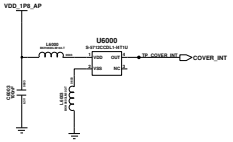

Cover Detect

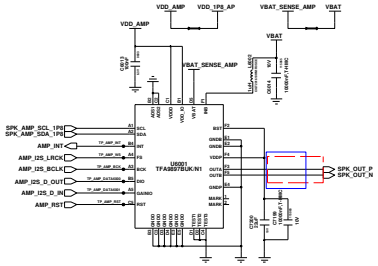

Audio amp

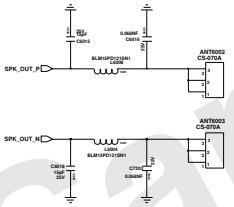

SPK Connector

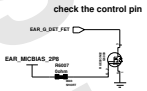

EAR DETECT

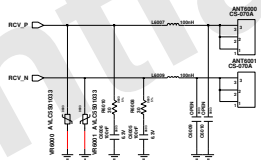

RCV

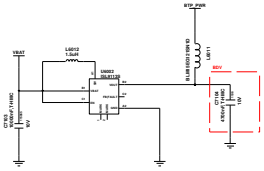

BTP DC-DC

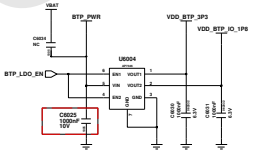

BTP OCP and PWR

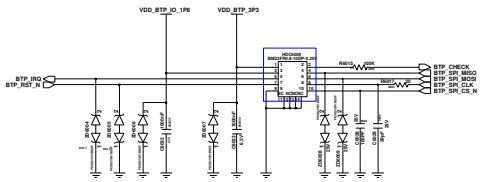

BTP IF Conn

Samsung Confidential

Engineer: kim89	SAMSUNG ELECTRONICS		
Drawn by: kim89			
PROJ CHK:	TITLE: N_A8_R6100_0327_2		Scale: A1
DOC CTRL CHK:			16 1 12 A
MFG ENGR CHK:			
QA CHK:	REV:	Drawing Number:	Page: 5
Changed by: kim89	Date Changed: Wednesday, May 27, 2015	Time Changed: 6:28:58 pm	

SAMSUNG CONFIDENTIAL
THIS DOCUMENT CONTAINS CONFIDENTIAL INFORMATION AND PROPRIETARY TO SAMSUNG ELECTRONICS CO'S PROPERTY. DO NOT DISCLOSE TO OR DUPLICATE FOR OTHERS EXCEPT AS AUTHORISED BY SAMSUNG.

CAMERA

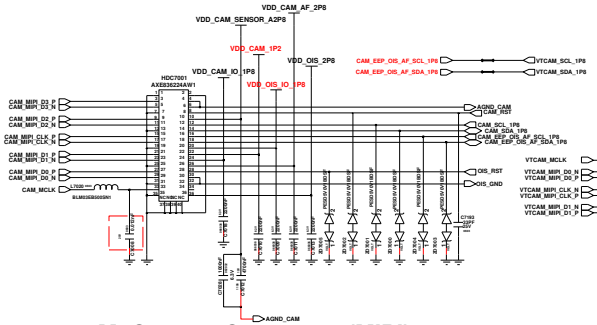

13M_Camera Connector (MIPI)

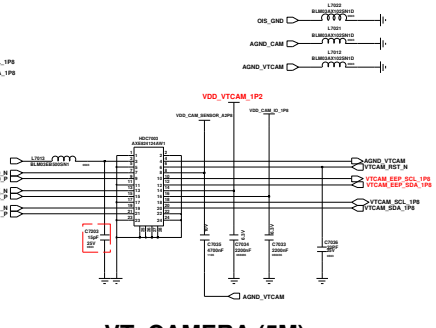

VT_CAMERA (5M)

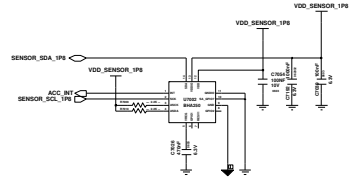

Sensor Hub integrated Accel Sensor

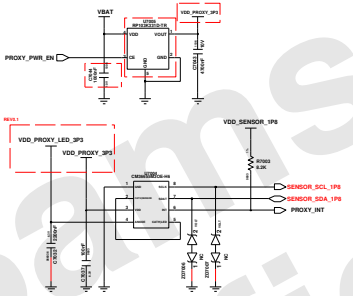

Proxy +RGB Sensor

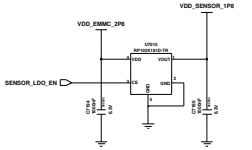

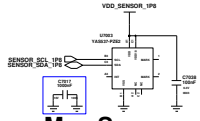

Mag Sensor

DISPLAY

OCTA CONNECTOR

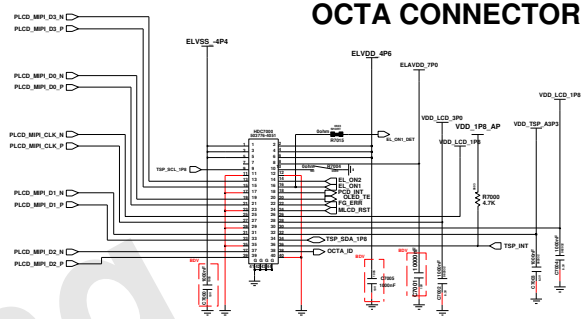

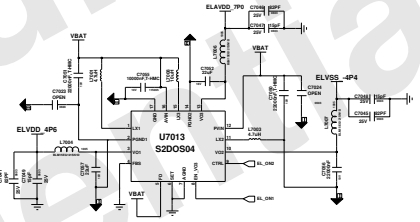

HD OCTA DC-DC

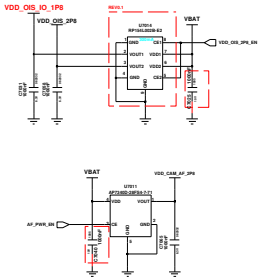

OIS AF LDO

IF SUB PBA Connector

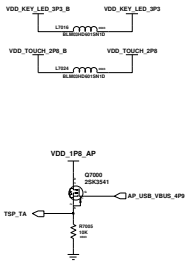

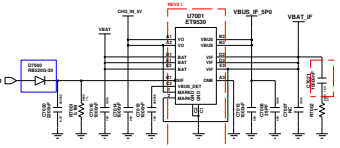

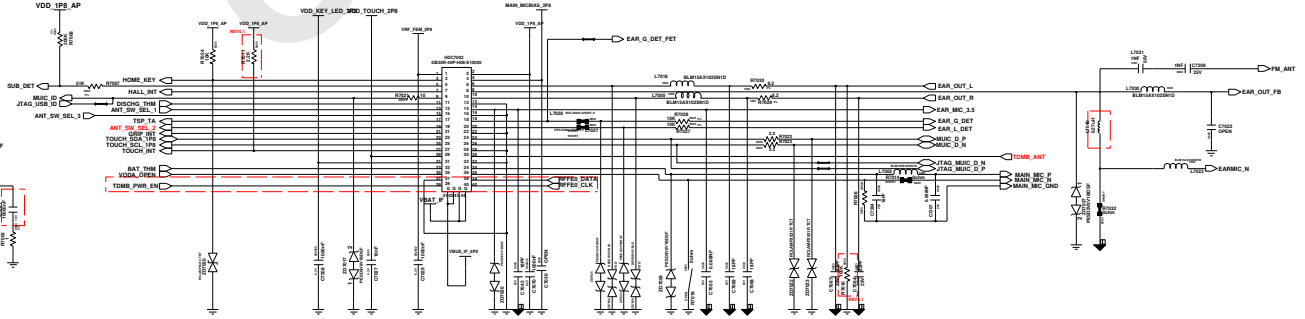

Samsung Confidential

CAM / DISPLAY