WWW.AliFixit.COM

SAMSUNG CONFIDENTIAL
THIS DOCUMENT CONTAINS CONFIDENTIAL PROPRIETARY INFORMATION THAT IS SAMSUNG ELECTRONICS CO'S PROPERTY. DO NOT DISCLOSE TO OR DUPLICATE FOR OTHERS EXCEPT AS AUTHORIZED BY SAMSUNG.

SM-N910C_REV0.8

2014.09.03

sheet01 : RF Front end #1
sheet02 : RF Front end #2
sheet03 : TRANSCEIVER
sheet04 : SENSOR HUB / Connectivity
sheet05 : CP / MEMORY
sheet06 : AP
sheet07 : AP / AP PM IC
sheet08 : CHARGER / IF PM IC / MHL
sheet09 : CODEC / AUDIO
sheet91 : DISPLAY, CAM, SUB PCB CON
sheet92 : WACOM, MHL, FPGA

Samsung Confidential

Engineer
Drawn by:
R&D CHK:
DOC CTRL CHK:
MFG ENGR CHK:
QA CHK:
TITLE: N910C
Size: A1
Drawing Number
3/9
Changed by:
Date Changed:
Time Changed:

user03|ecad3|10.244.89.120|20140904-081321

WWW.ALISALER.COM

WWW.AliFixit.COM

SAMSUNG CONFIDENTIAL
THIS DOCUMENT CONTAINS CONFIDENTIAL PROPRIETARY INFORMATION THAT IS SAMSUNG ELECTRONICS CO'S PROPERTY. DO NOT DISCLOSE TO OR DUPLICATE FOR OTHERS EXCEPT AS AUTHORIZED BY SAMSUNG.

MAIN ANT1

MAIN MLB_ANT Conn

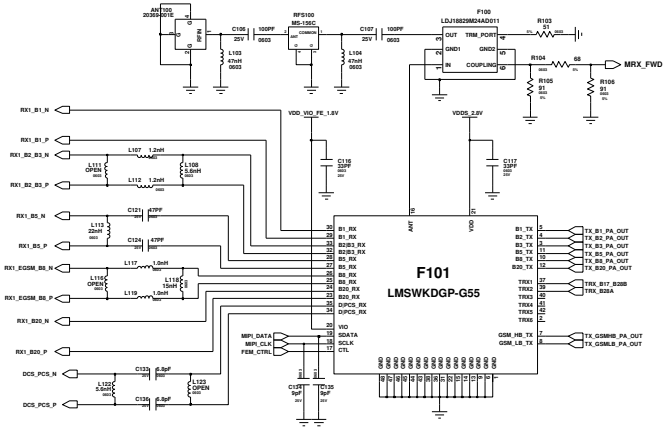

MAIN-FEMID

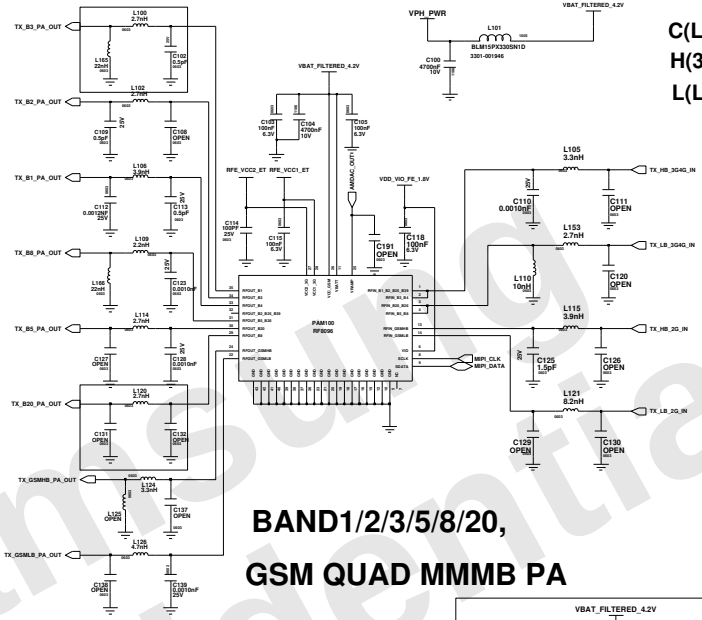

BAND1/2/3/5/8/20, GSM QUAD MMMB PA

C(LTE)
H(3G)
L(LATIN)

BOX: LTE only

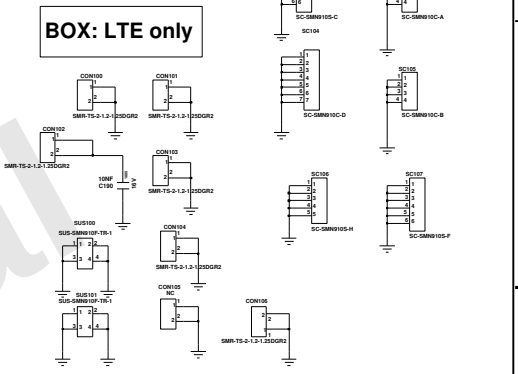

LTE BAND17 / 28

MAIN ANT2 HB

MAIN HB_ANT Conn

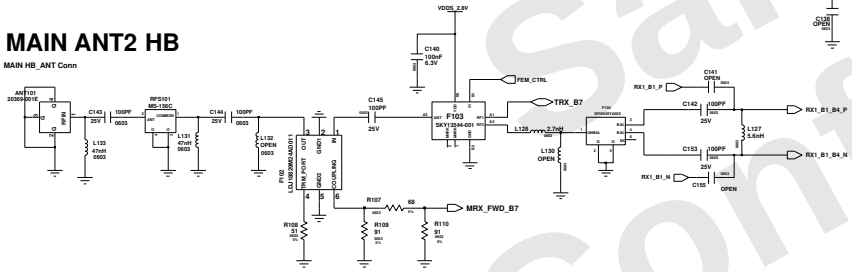

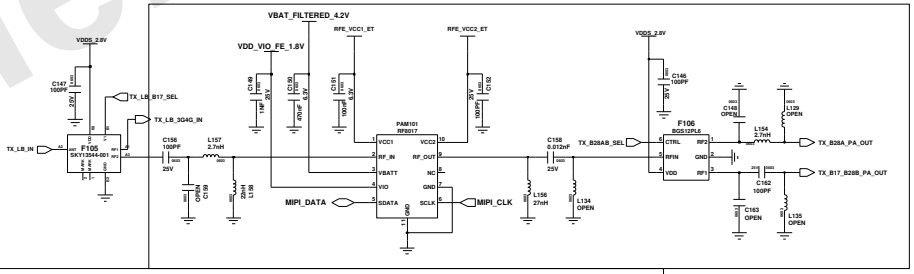

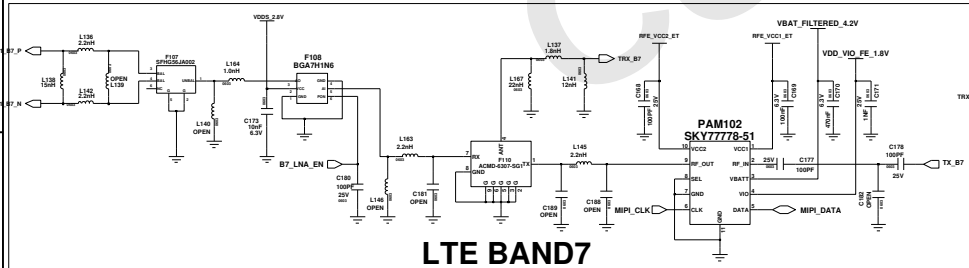

LTE BAND7

LTE B17 / B28B DUP

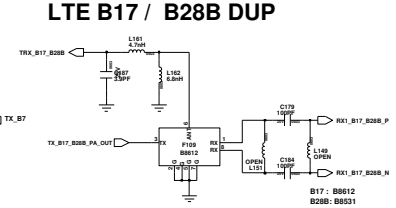

LTE B28A DUP (EUR open)

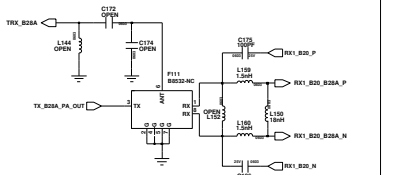

Changed by: wil	Date Changed: Thursday, May 28, 2009	Time Changed: 10:49:59 am	QA CHK	REV	Drawing Number	Sheet 1/10	

Engineer: wil
Drawn by: wil
R&D CHK
DOC CTRL CHK
MFG ENGR CHK
TITLE: RF Front-End_1
Size: A2

Samsung Confidential

WWW.ALISALER.COM

WWW.AliFixit.COM

SAMSUNG CONFIDENTIAL
THIS DOCUMENT CONTAINS CONFIDENTIAL PROPRIETARY INFORMATION THAT IS SAMSUNG ELECTRONICS CO'S PROPERTY. DO NOT DISCLOSE TO OR DUPLICATE FOR OTHERS EXCEPT AS AUTHORIZED BY SAMSUNG.

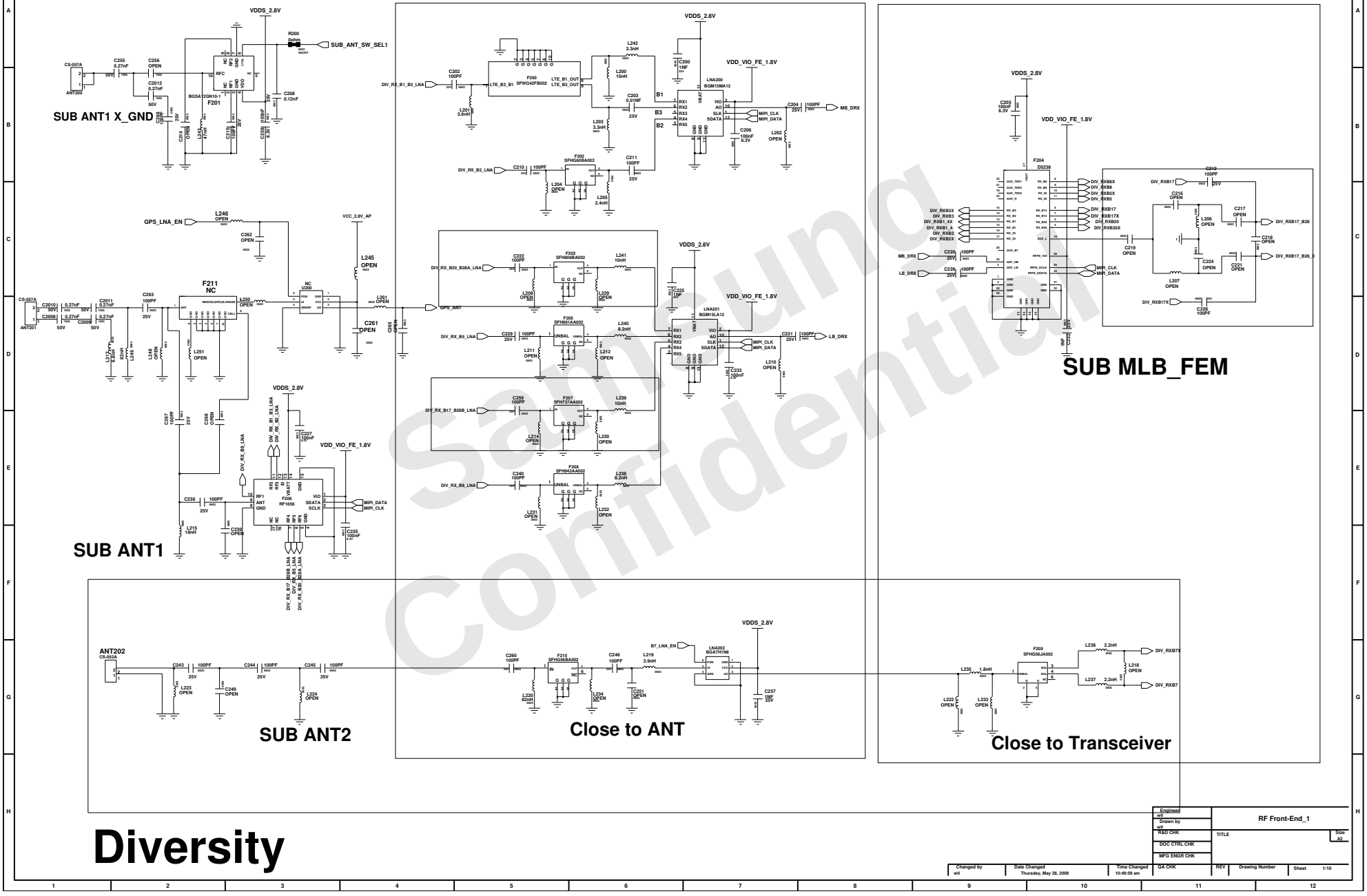

Samsung Confidential

user03|ecad3|10.244.89.120|20140904-081324

WWW.ALISALER.COM

WWW.AliFixit.COM

SAMSUNG CONFIDENTIAL
THIS DOCUMENT CONTAINS CONFIDENTIAL PROPRIETARY INFORMATION THAT IS SAMSUNG ELECTRONICS CO'S PROPERTY. DO NOT DISCLOSE TO OR DUPLICATE FOR OTHERS EXCEPT AS AUTHORIZED BY SAMSUNG.

TRANSCEIVER

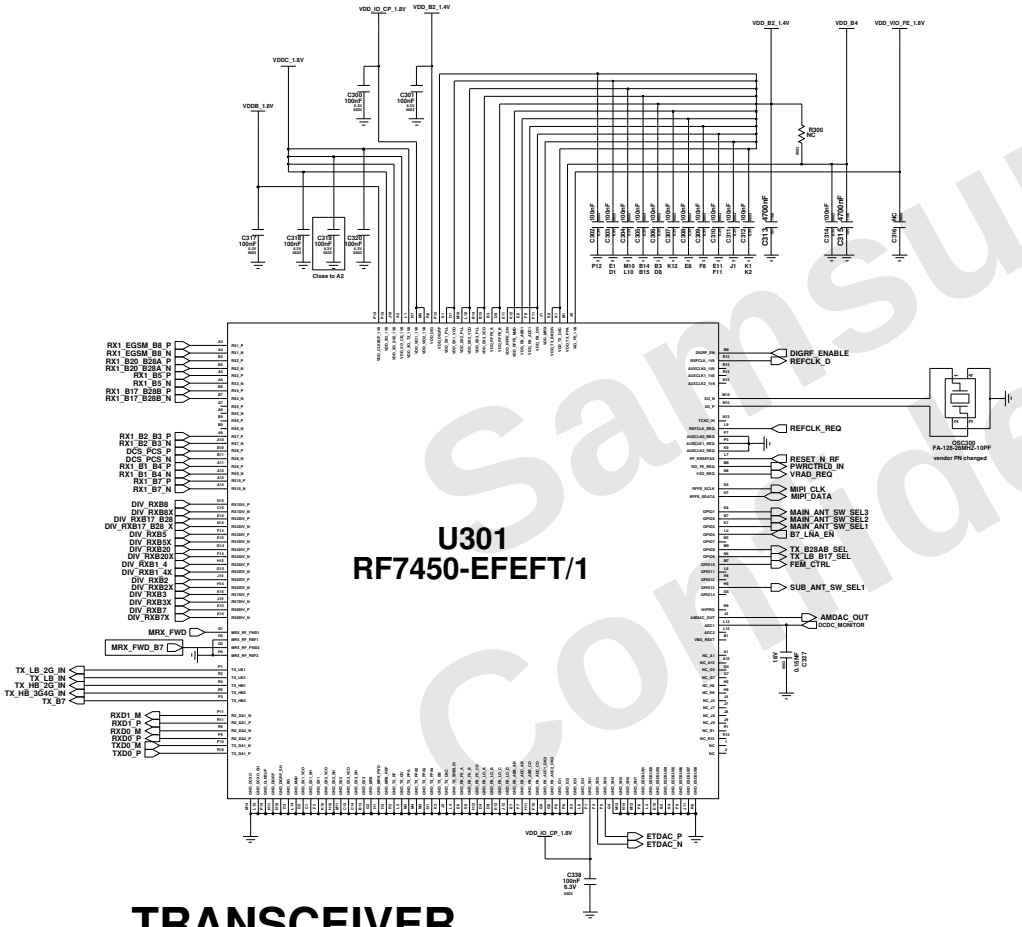

TRANSCEIVER

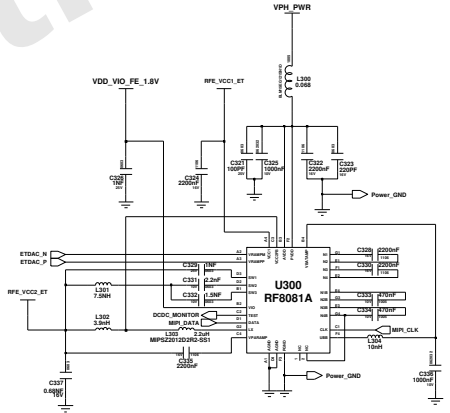

PAM DCDC_ET

Engineer: wtl		RF Front-End_2	
Drawn by: wtl			
R&D CHK		TITLE	Size: A2
DOC CTRL CHK			
MFG ENGR CHK			
Changed by: wtl	Date Changed: Thursday, May 28, 2009	Time Changed: 10:49:59 am	QA CHK
REV	Drawing Number	Sheet: 1/10	

user03|ecad3|10.244.89.120|20140904-081324

WWW.ALISALER.COM

WWW.AliFixit.COM

SAMSUNG CONFIDENTIAL
THIS DOCUMENT CONTAINS CONFIDENTIAL PROPRIETARY INFORMATION THAT IS SAMSUNG ELECTRONICS CO'S PROPERTY. DO NOT DISCLOSE TO OR DUPLICATE FOR OTHERS EXCEPT AS AUTHORIZED BY SAMSUNG.

SENSOR HUB + GPS

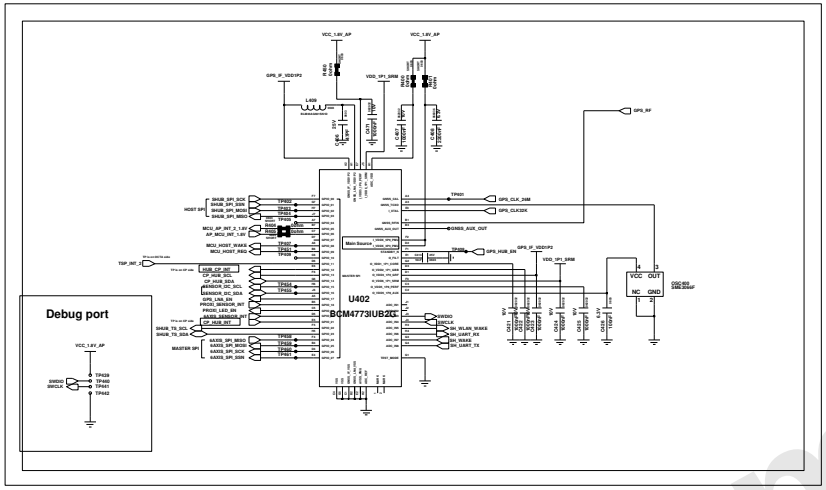

GPS

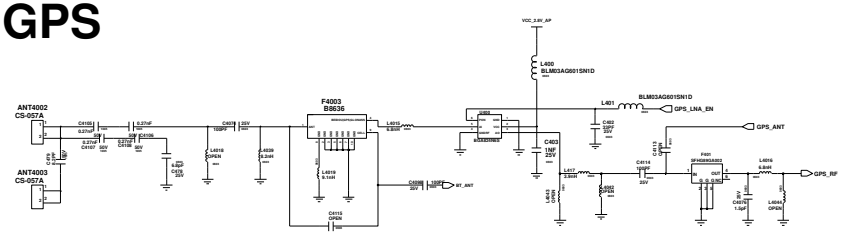

BT/WIFI

SM-N910C	SEMCO & MURATA	4709-002313
SM-N910H	SEMCO only	4709-002307
SM-N910U	SEMCO only	4709-002307

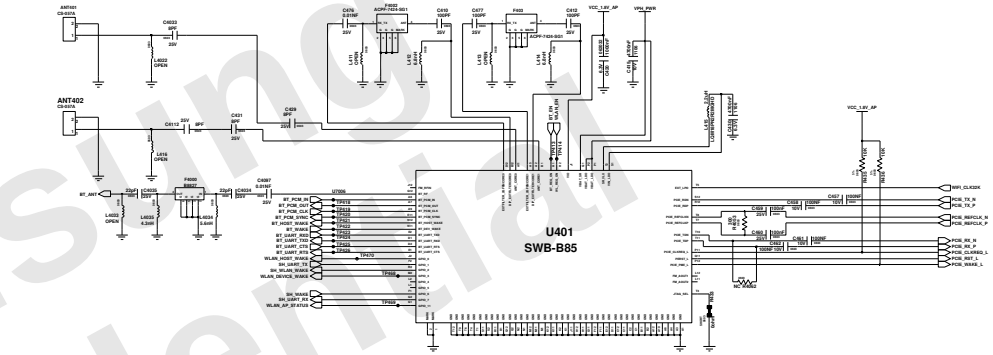

SENSORS

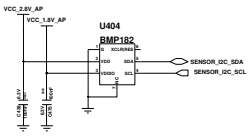

Barometer Sensor

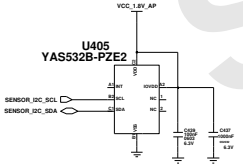

Magnetic Sensor

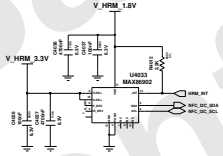

HRM Sensor

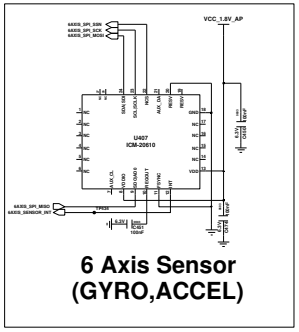

6 Axis Sensor
(GYRO,ACCEL)

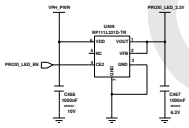

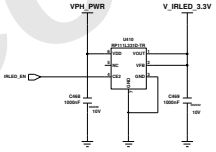

NFC

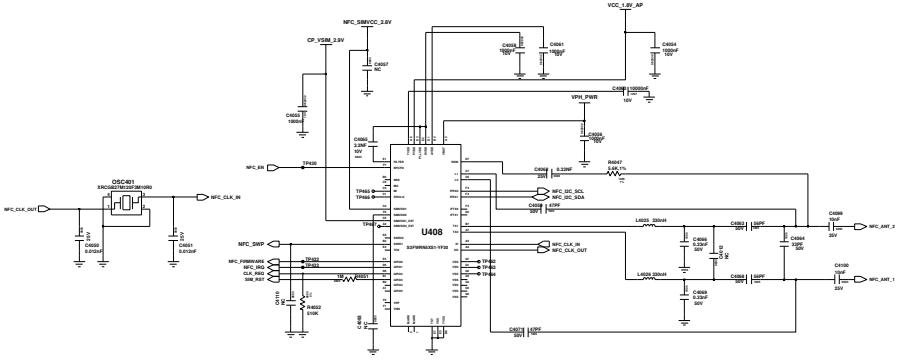

Engineer
Connectivity

Samsung Confidential

user03|ecad3|10.244.89.120|20140904-081325

WWW.ALISALER.COM

WWW.AliFixit.COM

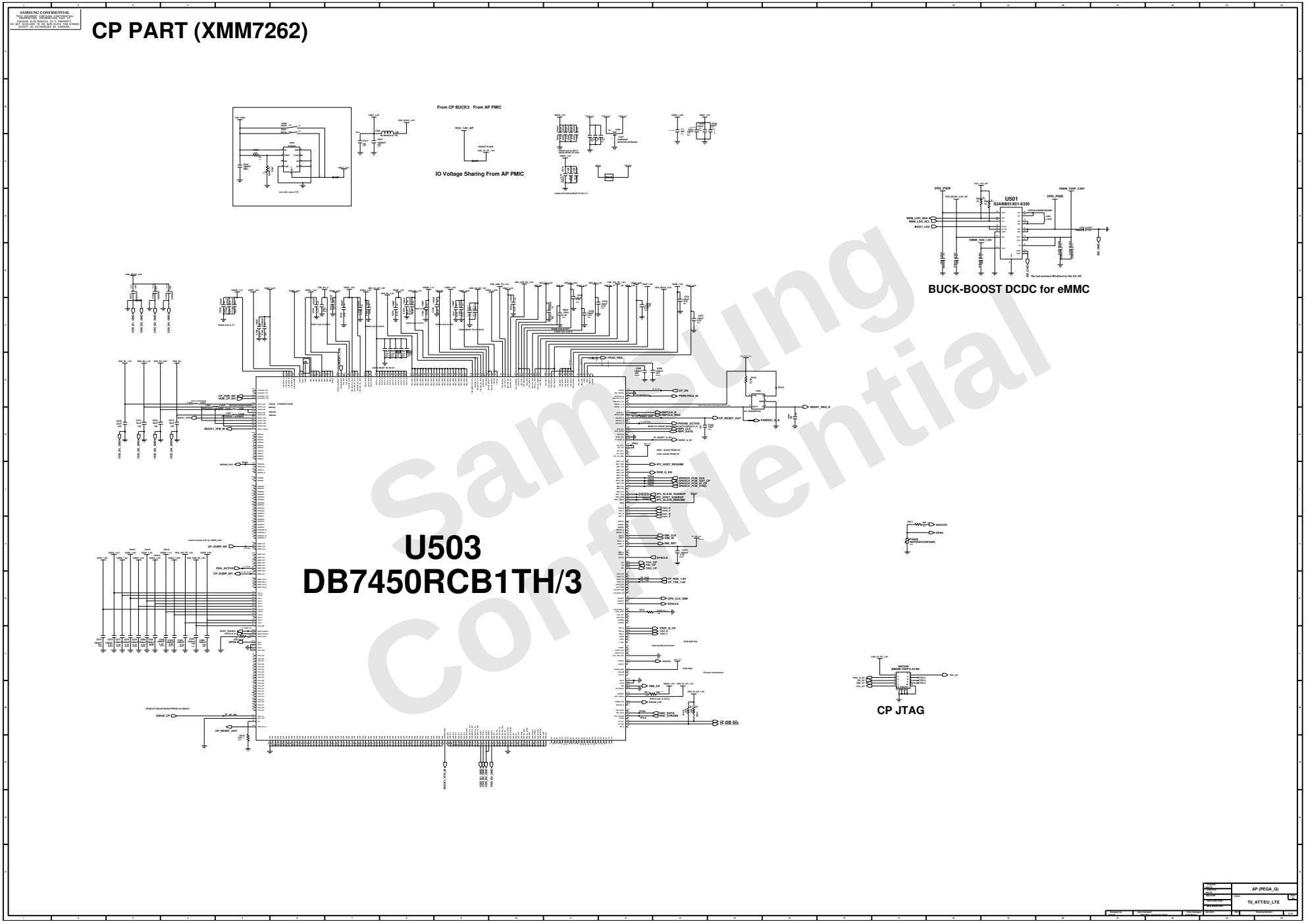

user03|ecad3|10.244.89.120|20140904-081327

WWW.ALISALER.COM

WWW.AliFixit.COM

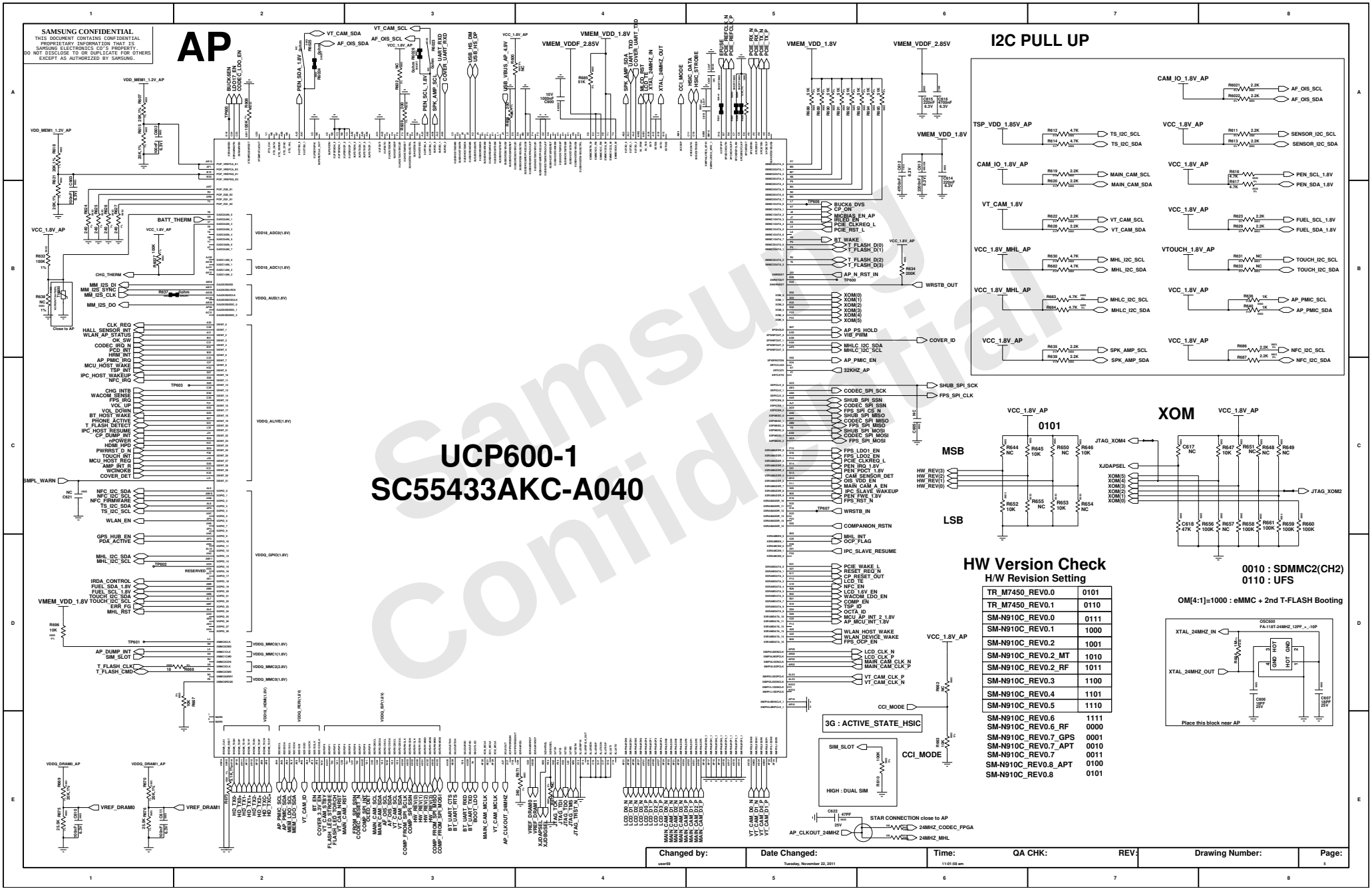

Samsung Confidential

user03|ecad3|10.244.89.120|20140904-081328

WWW.ALISALER.COM

WWW.AliFixit.COM

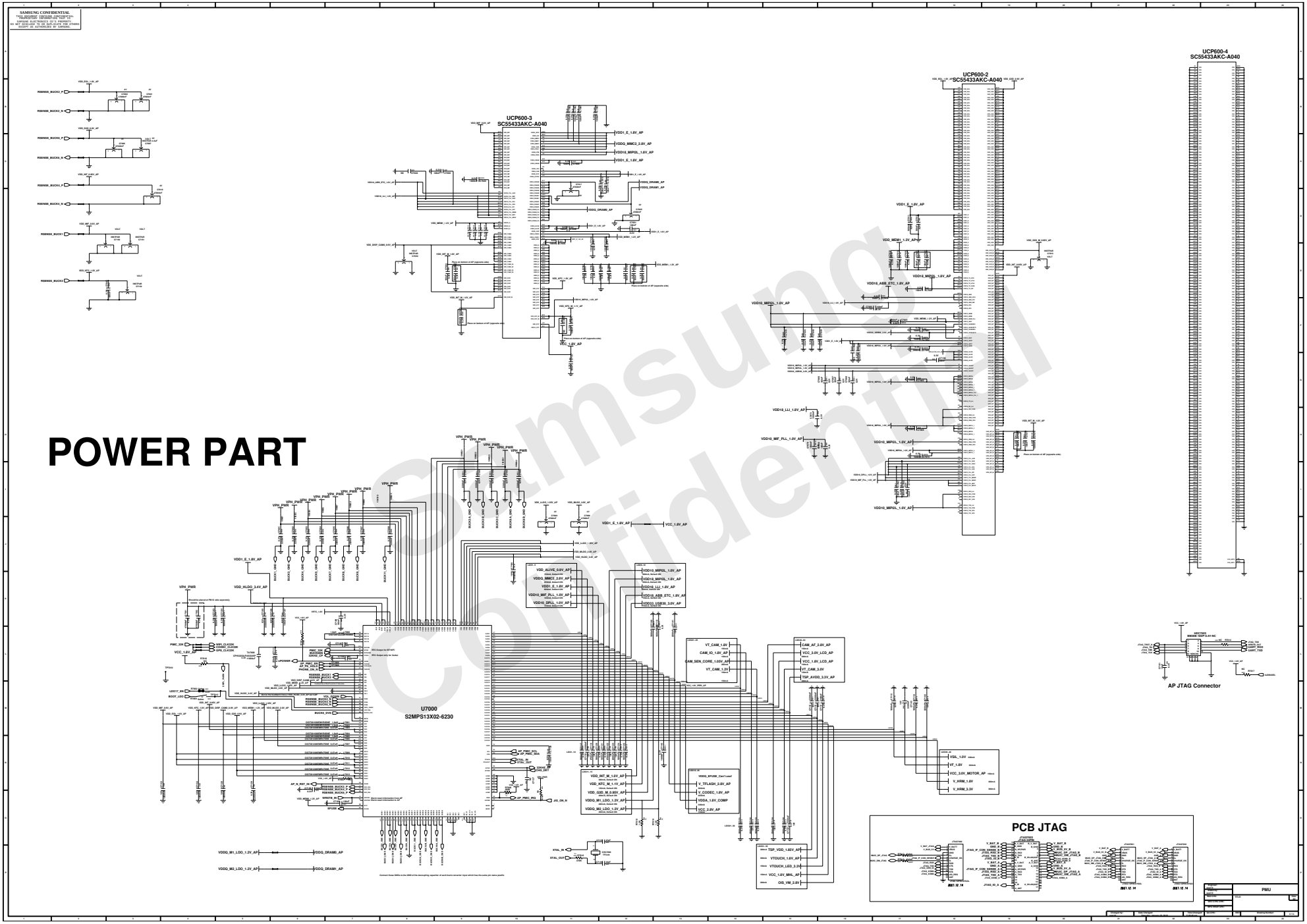

Samsung Confidential

user03|ecad3|10.244.89.120|20140904-081329

WWW.ALISALER.COM

WWW.AliFixit.COM

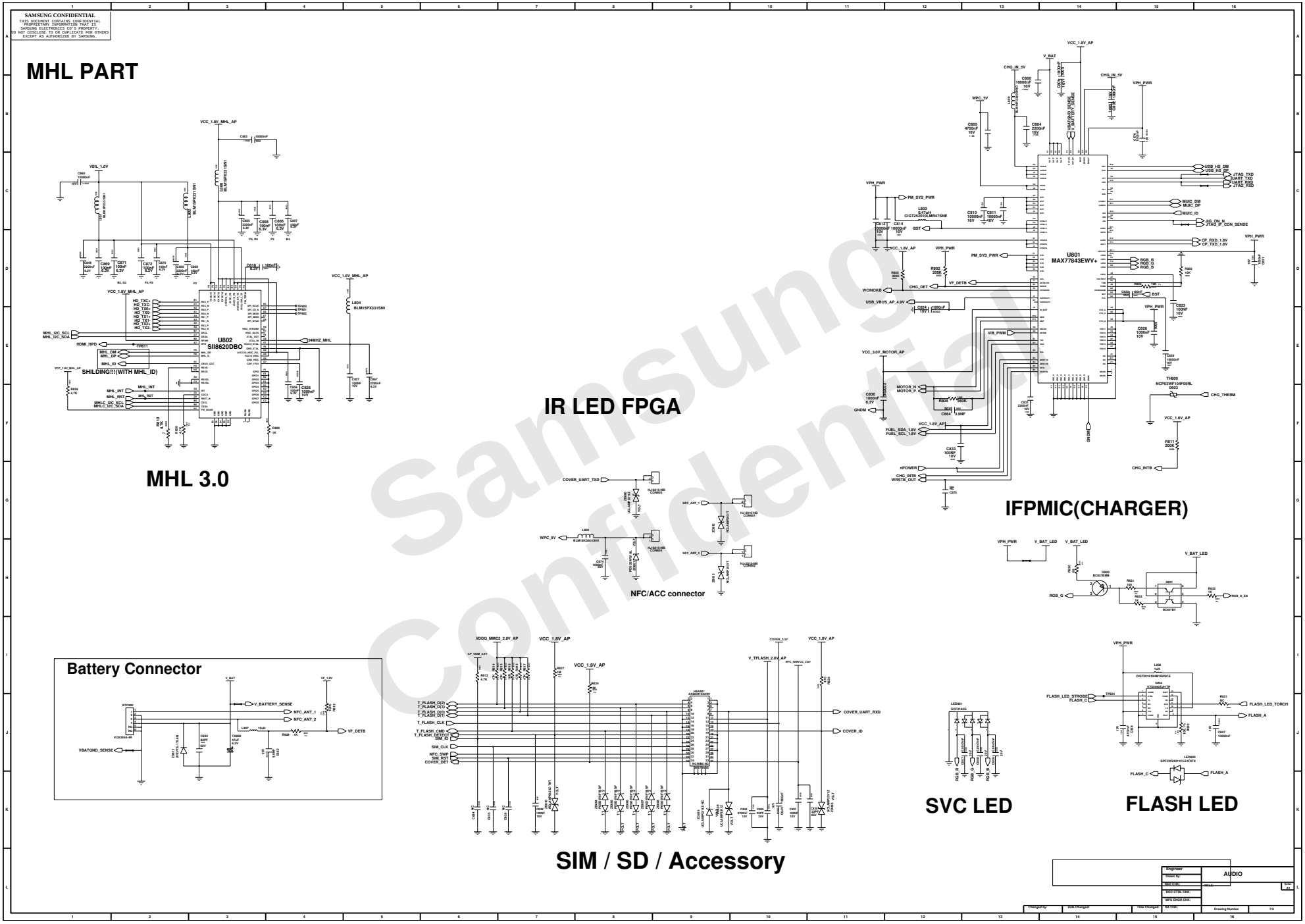

user03|ecad3|10.244.89.120|20140904-081331

WWW.ALISALER.COM

WWW.AliFixit.COM

SAMSUNG CONFIDENTIAL
THIS DOCUMENT CONTAINS CONFIDENTIAL INFORMATION AND TRADE SECRETS OF SAMSUNG ELECTRONICS CO'S PROPERTY. DO NOT DISCLOSE TO OR DUPLICATE FOR OTHERS EXCEPT AS AUTHORIZED BY SAMSUNG.

Audio PART

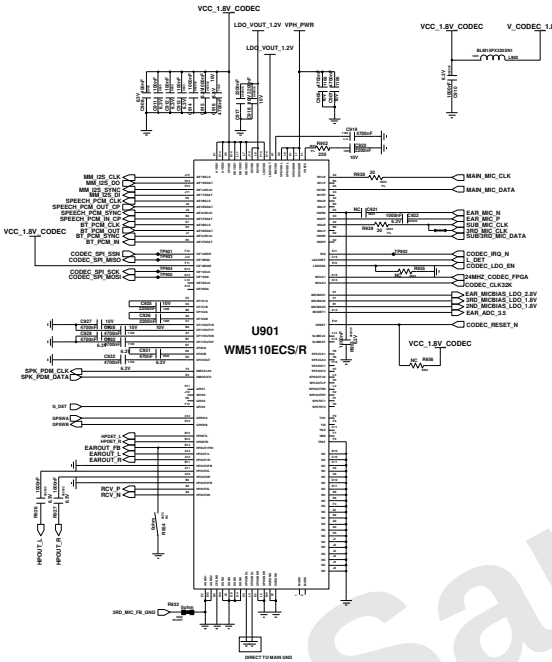

CODEC

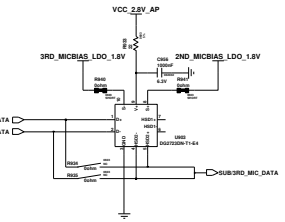

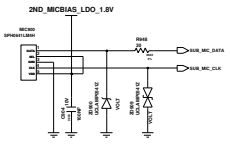

SUB MIC

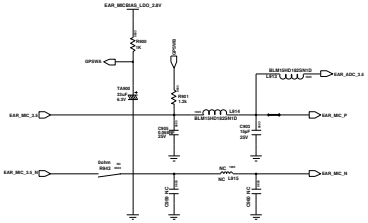

Ear MIC

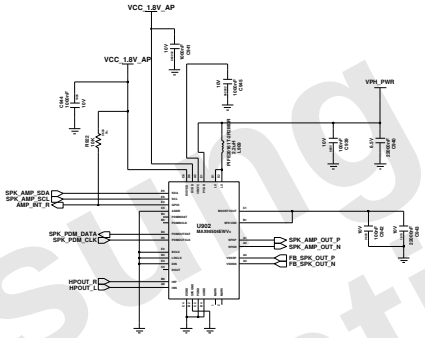

SPK AMP

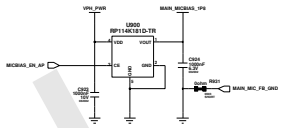

MAIN MIC BIAS LDO

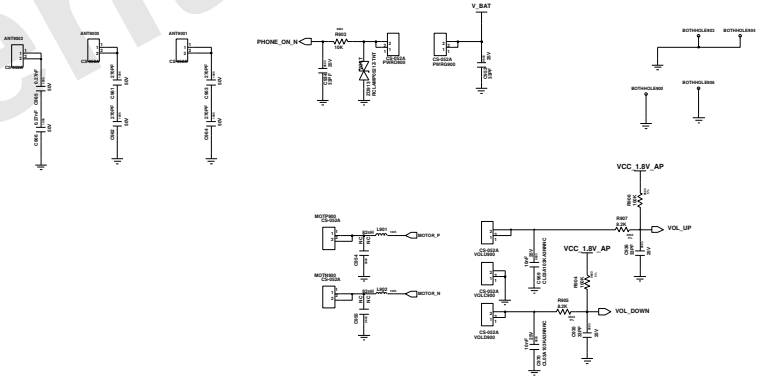

POWER KEY + MOTOR + BOSSHOLE + VOLUME

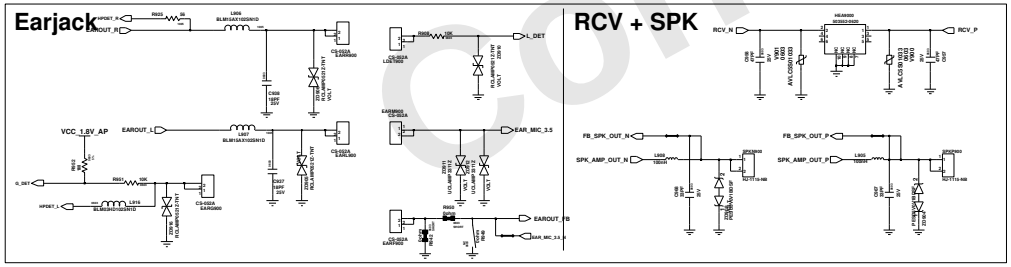

Samsung Confidential

Engineer	AUDIO
Model No	
R&D CHK	TITLE:
DOC CTRL CHK	
MFG ENGR CHK	
QA CHK	Drawing Number

Changed By | Date Changed | Time Changed

user03|ecad3|10.244.89.120|20140904-081333

WWW.ALISALER.COM

WWW.AliFixit.COM

SAMSUNG CONFIDENTIAL
THIS DOCUMENT CONTAINS CONFIDENTIAL INFORMATION AND TRADE SECRETS OF SAMSUNG ELECTRONICS CO'S PROPERTY. DO NOT DISCLOSE TO OR DUPLICATE FOR OTHERS EXCEPT AS AUTHORIZED BY SAMSUNG.

CAMERA PART

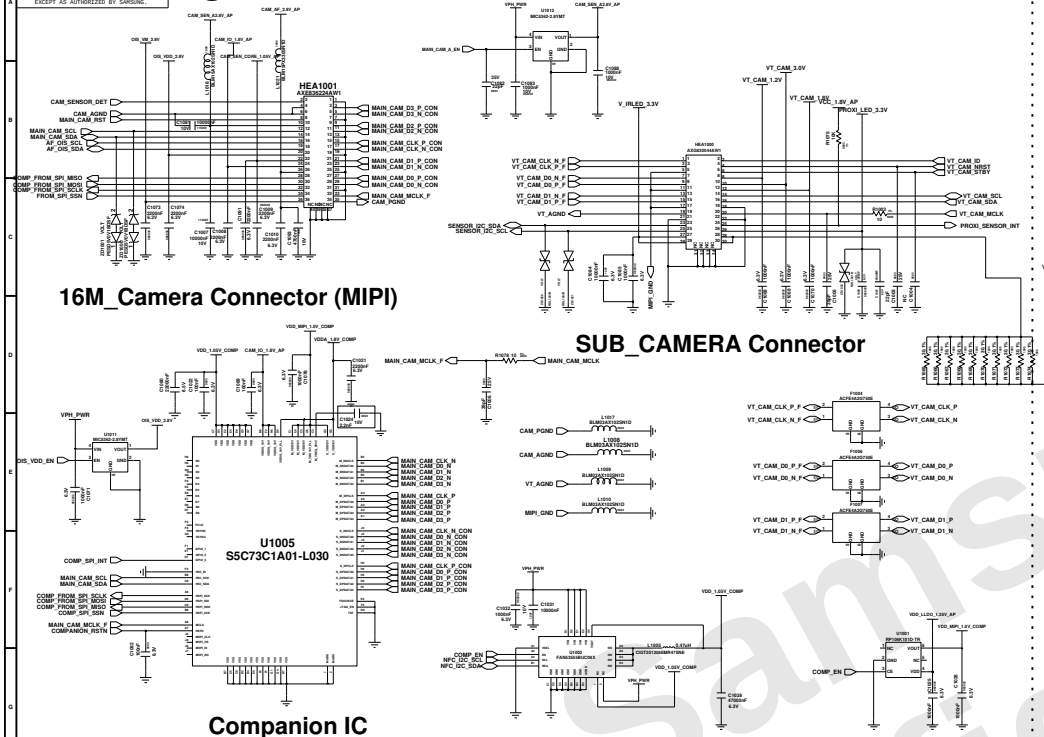

DISPLAY PART

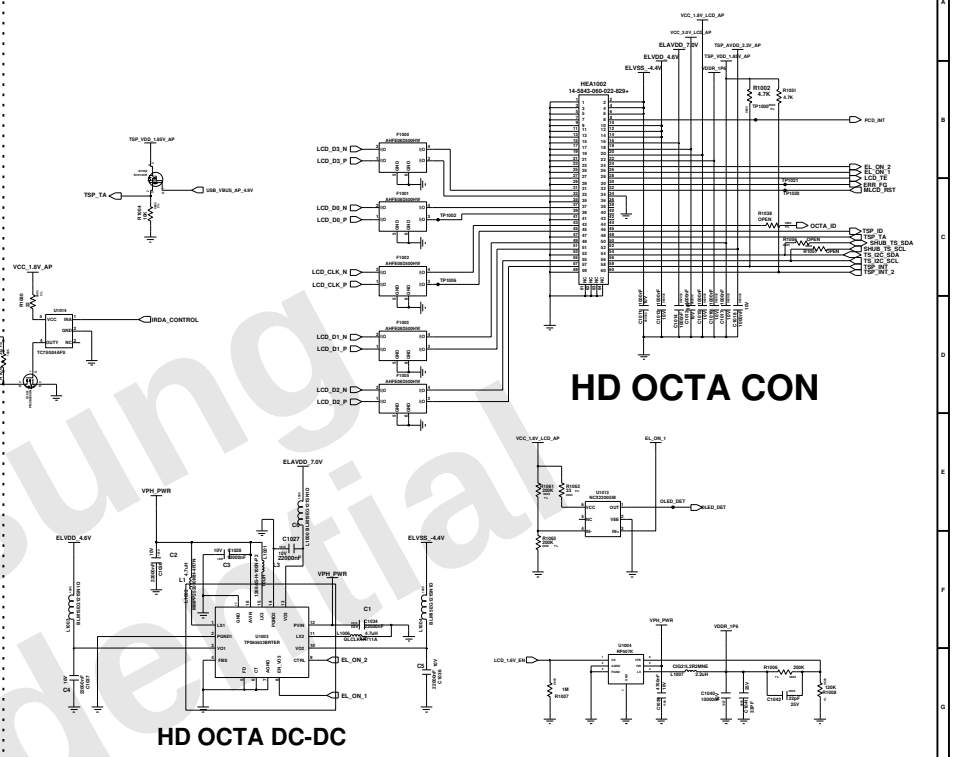

SUB FPCB IF CONN. (USB2.0 / Main ANT / TOUCH)

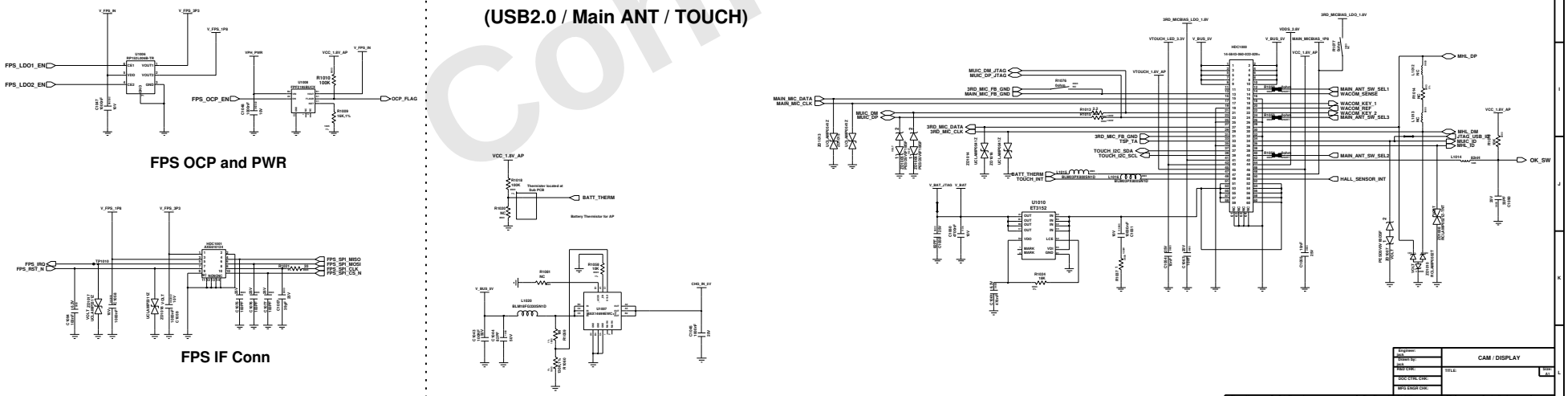

Samsung Confidential

WWW.ALISALER.COM

WWW.AliFixit.COM

SAMSUNG CONFIDENTIAL
THIS DOCUMENT CONTAINS CONFIDENTIAL INFORMATION AND PROPRIETARY TO SAMSUNG ELECTRONICS CO'S PROPERTY. DO NOT DISCLOSE TO OR DUPLICATE FOR OTHERS EXCEPT AS AUTHORIZED BY SAMSUNG.

WACOM PART

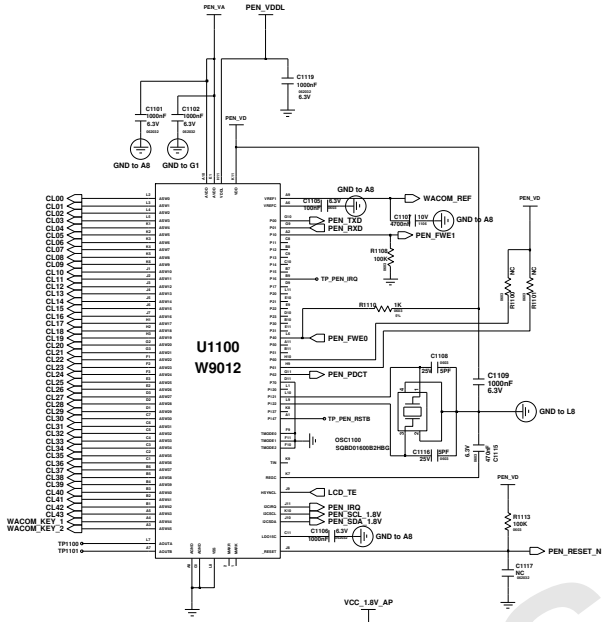

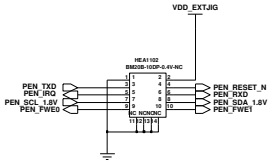

WACOM JTAG

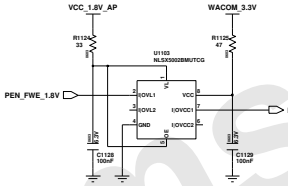

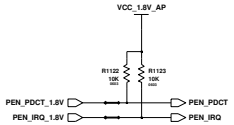

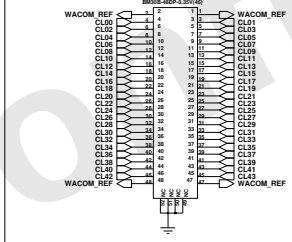

WACOM connector

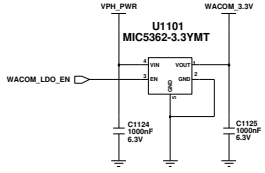

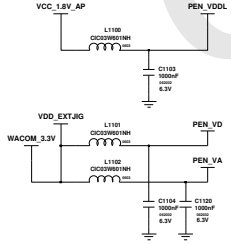

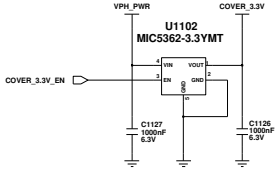

Samsung Confidential

Engineer	WACOM / MHL
Drawn by:	
R&D CHK:	TITLE:
DOC CTRL CHK:	SIZE: A1
QTC ENGR CHK:	
QA CHK:	Drawing Number

Changed by:	Date Changed:	Time Changed:

user03|ecad3|10.244.89.120|20140904-081337

WWW.ALISALER.COM

WWW.AliFixit.COM

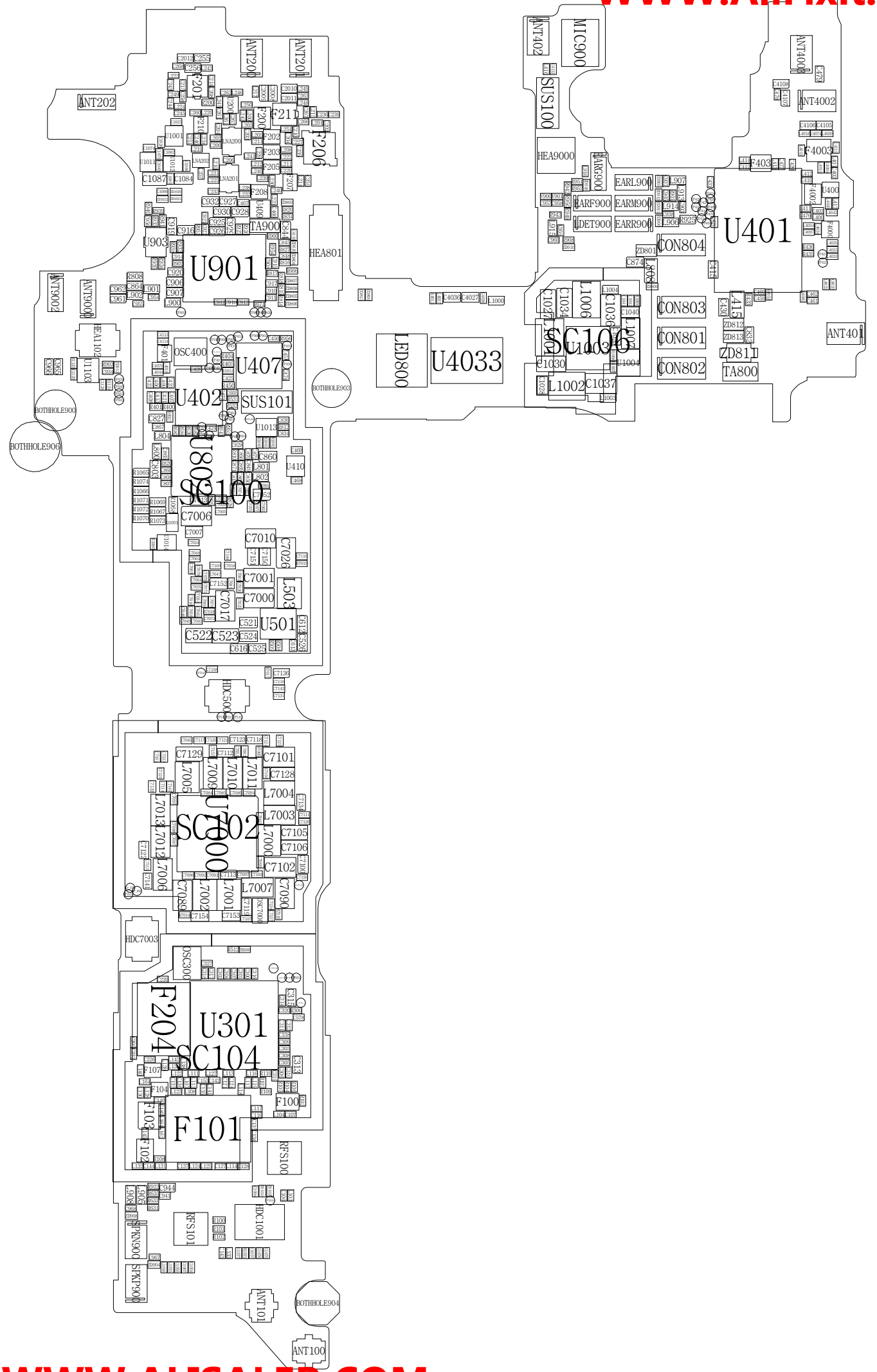
ANT202
ANT201
ANT200
U901
U903
HEA801
ANT9002
ANT9000
HEA1102
U1103
BOTHHOLE900
BOTHHOLE906
U402
U407
OSC400
SUS101
U801
SC100
C7006
C7007
C7010
C7026
C7001
C7000
C7017
L503
U501
C522
C523
C524
C616
C525
HDC5000
C7136
C7129
C7101
C7128
L7005
L7009
L7010
L7011
L7004
L7003
L7013
L7012
L7006
C7105
C7106
C7102
L7007
C7098
L7002
L7001
C7154
C7153
C7090
U700
SC702
HDC7003
OSC300
U301
F204
SC104
F107
F104
F103
F102
F101
F100
RFS100
RFS101
HDC1001
SPRN900
SPKP900
ANT101
BOTHHOLE904
ANT100
F211
F206
F200
F202
F203
F205
F208
U1001
LNA200
LNA202
LNA201
C1087
C1084
C1011
C932
C927
C930
C928
C925
C926
C916
TA900
C919
C920
C906
C907
L900
C962
C961
C864
C907
C901
C808
C805
C803
C804
C801
C802
C827
C860
L801
L802
U410
L804
C1065
C1074
C1066
C1071
C1075
C1070
C1068
C1067
C1073
C1069
C7135
C7152
C7154
C7153
C7090
C7098
C7129
C7101
C7128
C7112
C7123
C7118
C7136
C7116
C7114
C7115
C7113
C7111
C7110
C7109
C7108
C7107
C7104
C7103
C7102
C7100
C7099
C7097
C7096
C7095
C7094
C7093
C7092
C7091
C7089
C7088
C7087
C7086
C7085
C7084
C7083
C7082
C7081
C7080
C7079
C7078
C7077
C7076
C7075
C7074
C7073
C7072
C7071
C7070
C7069
C7068
C7067
C7066
C7065
C7064
C7063
C7062
C7061
C7060
C7059
C7058
C7057
C7056
C7055
C7054
C7053
C7052
C7051
C7050
C7049
C7048
C7047
C7046
C7045
C7044
C7043
C7042
C7041
C7040
C7039
C7038
C7037
C7036
C7035
C7034
C7033
C7032
C7031
C7030
C7029
C7028
C7027
C7026
C7025
C7024
C7023
C7022
C7021
C7020
C7019
C7018
C7017
C7016
C7015
C7014
C7013
C7012
C7011
C7010
C7009
C7008
C7007
C7006
C7005
C7004
C7003
C7002
C7001
C7000
L7000
L7001
L7002
L7003
L7004
L7005
L7006
L7007
L7008
L7009
L7010
L7011
L7012
L7013
L7014
L7015
L7016
L7017
L7018
L7019
L7020
L7021
L7022
L7023
L7024
L7025
L7026
L7027
L7028
L7029
L7030
L7031
L7032
L7033
L7034
L7035
L7036
L7037
L7038
L7039

WWW.AliFixit.COM

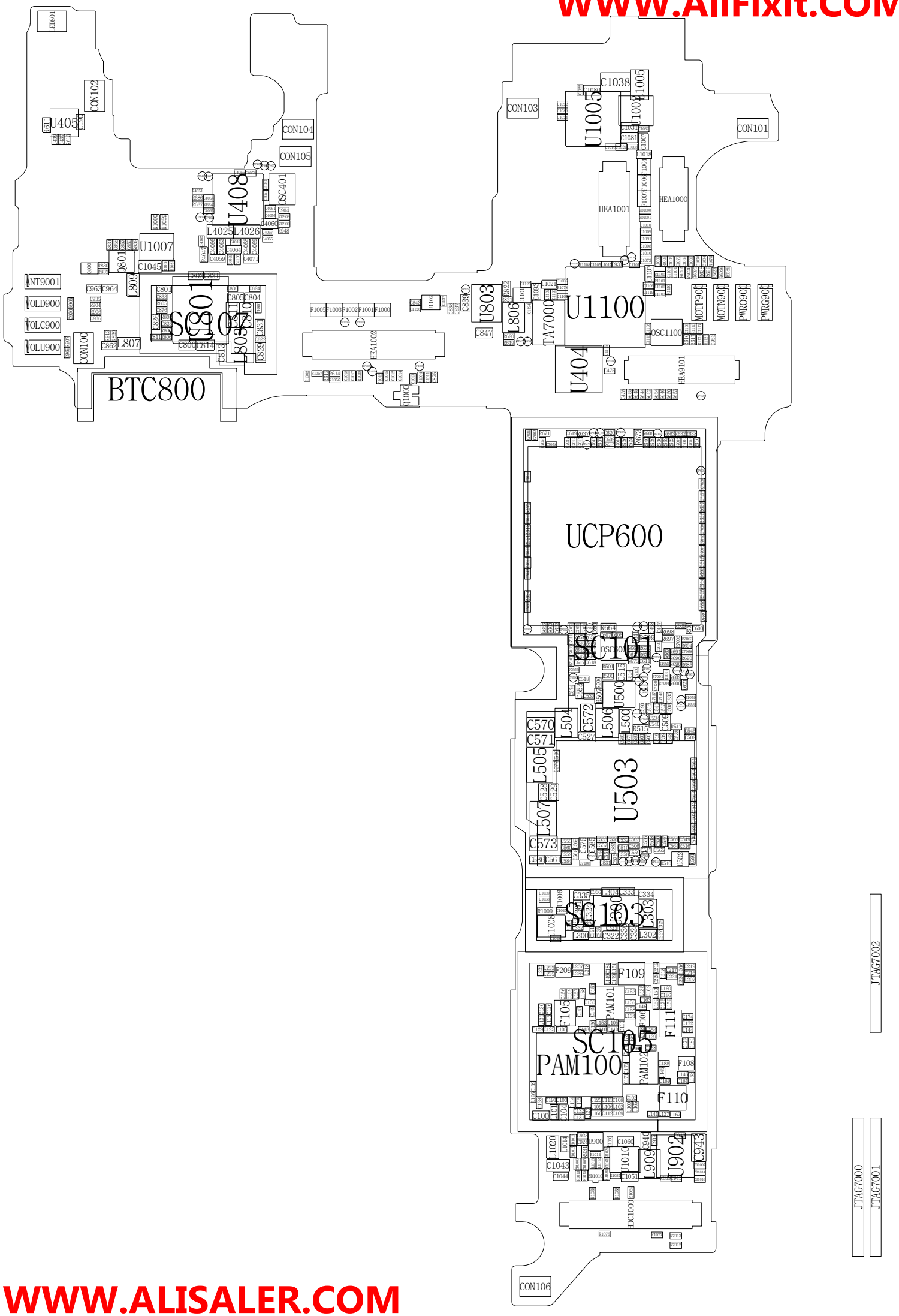

WWW.ALISALER.COM