SAMSUNG CONFIDENTIAL
THIS DOCUMENT CONTAINS CONFIDENTIAL INFORMATION AND IS THE PROPERTY OF SAMSUNG ELECTRONICS CO'S PROPERTY. DO NOT DISCLOSE TO OR DUPLICATE FOR OTHERS EXCEPT AS AUTHORIZED BY SAMSUNG.

ROSELA LABS

SM-A510F REV0.2

2015.10.23

sheet01 : GSM / WCDMA / LTE RF (MAIN)
sheet02 : GSM / WCDMA / LTE RF (SUB)
sheet03 : GPS, BT/WIFI, NFC
sheet04 : AP
sheet05 : PMIC, eMMC, IF PMIC, SIM&SD, MST, MOTOR, BAT CON
sheet06 : AUDIO, BTP, MST
sheet07 : CAMERA, OCTA, SENSOR, IF CON

Samsung Confidential

REV0.1
REV0.2

Engineer
Issued By:
R&D CHK:
DOC CTRL CHK:
MFG ENGR CHK:
QA CHK:
TITLE:
SIZE A1
Changed By:
Date Changed:
Time Changed:
Drawing Number
REV

user89|swcad89|10.253.20.115|20151111-225641

SAMSUNG CONFIDENTIAL
THIS DOCUMENT CONTAINS CONFIDENTIAL
PROPRIETARY INFORMATION THAT IS
SAMSUNG ELECTRONICS CO'S PROPERTY.
DO NOT DISCLOSE TO OR DUPLICATE FOR OTHERS
EXCEPT AS AUTHORIZED BY SAMSUNG.

#1 RF

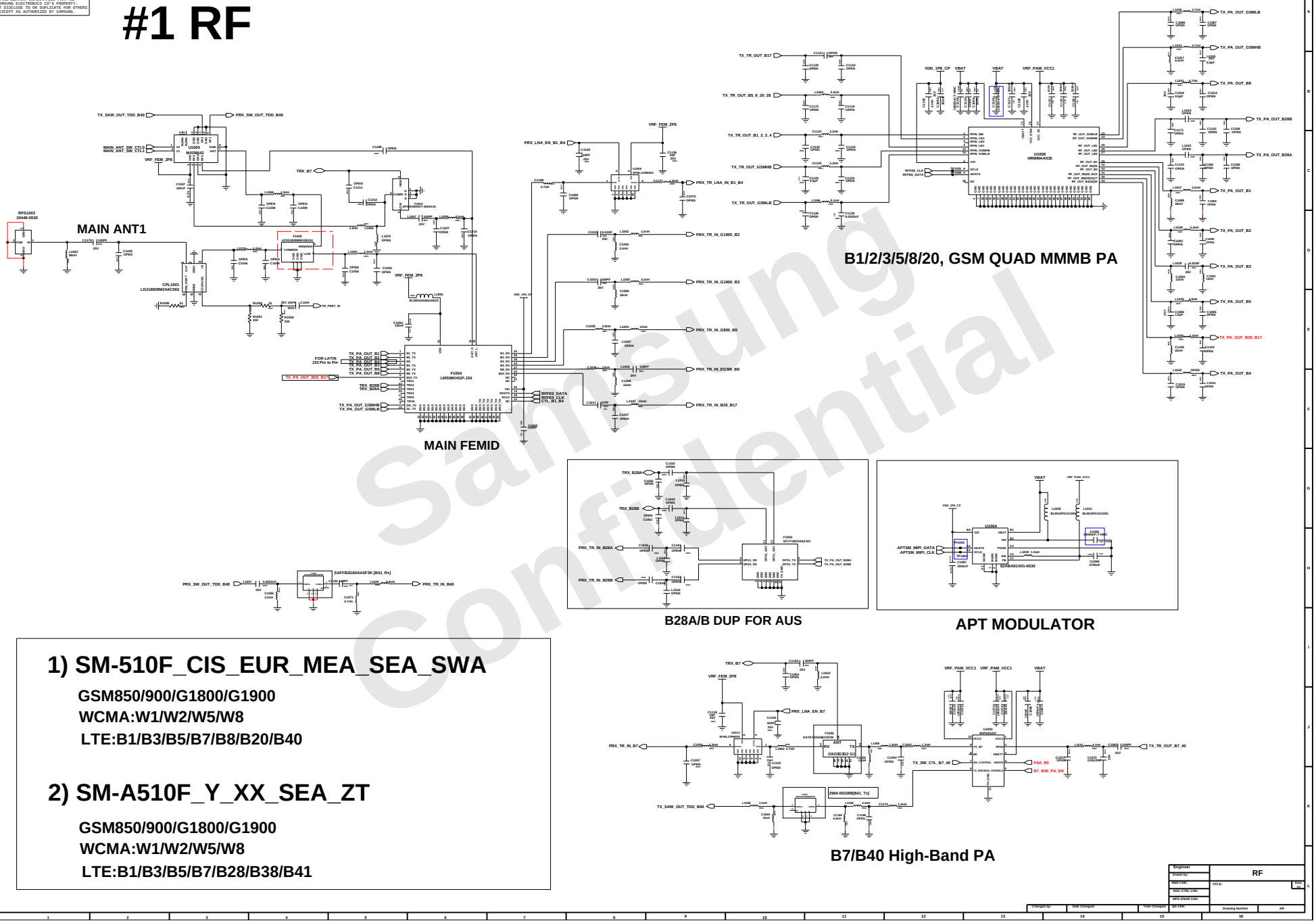

1) SM-510F_CIS_EUR_MEA_SEA_SWA

GSM850/900/G1800/G1900
WCMA:W1/W2/W5/W8
LTE:B1/B3/B5/B7/B8/B20/B40

2) SM-A510F_Y_XX_SEA_ZT

GSM850/900/G1800/G1900
WCMA:W1/W2/W5/W8
LTE:B1/B3/B5/B7/B28/B38/B41

Samsung Confidential

user89|swcad89|10.253.20.115|20151111-225642

SAMSUNG CONFIDENTIAL
THIS DOCUMENT CONTAINS CONFIDENTIAL PROPRIETARY INFORMATION THAT IS SAMSUNG ELECTRONICS CO'S PROPERTY. DO NOT DISCLOSE TO OR DUPLICATE FOR OTHERS EXCEPT AS AUTHORIZED BY SAMSUNG.

DRX

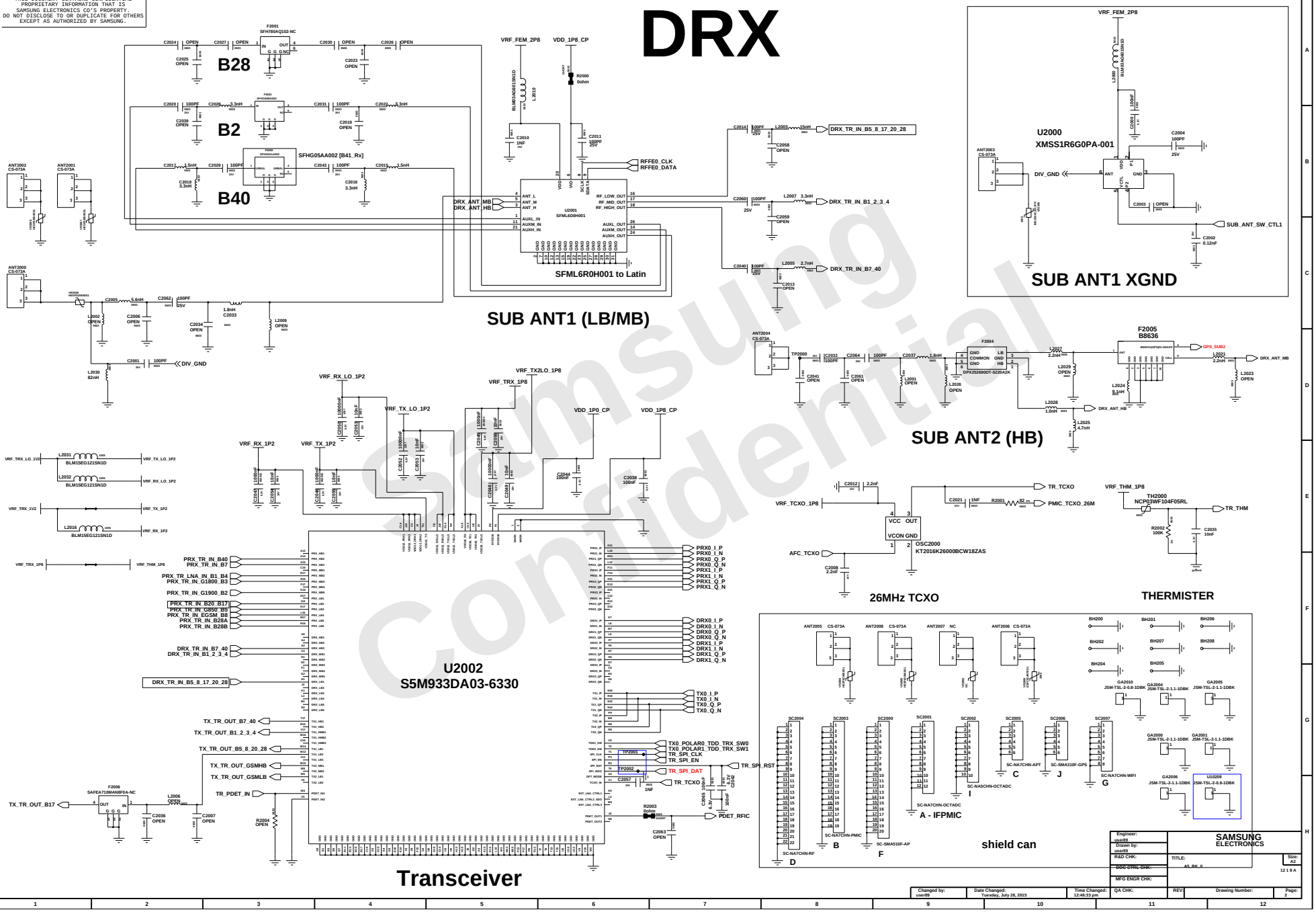

Samsung Confidential

SAMSUNG CONFIDENTIAL
THIS DOCUMENT CONTAINS CONFIDENTIAL INFORMATION AND PROPRIETARY TO SAMSUNG ELECTRONICS CO'S PROPERTY. DO NOT DISCLOSE TO OR DUPLICATE FOR OTHERS EXCEPT AS AUTHORIZED BY SAMSUNG.

< GPS >

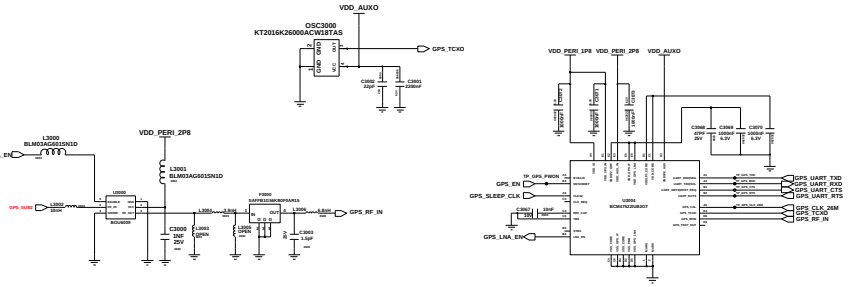

<NFC>

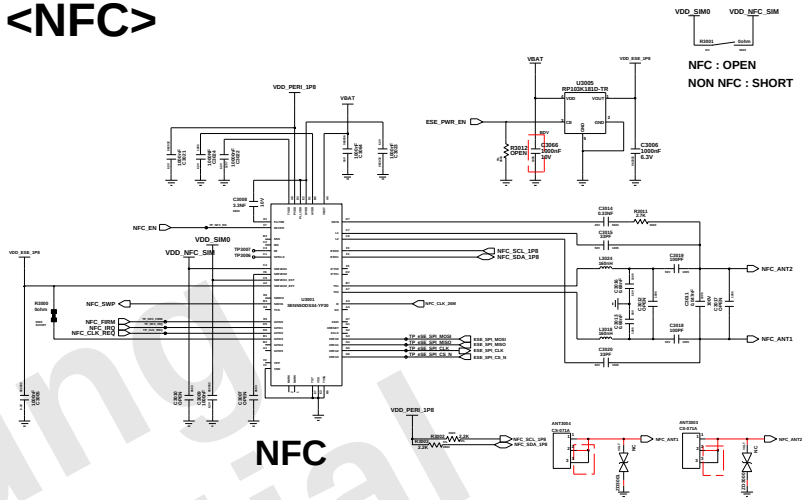

NFC

<BT/WIFI>

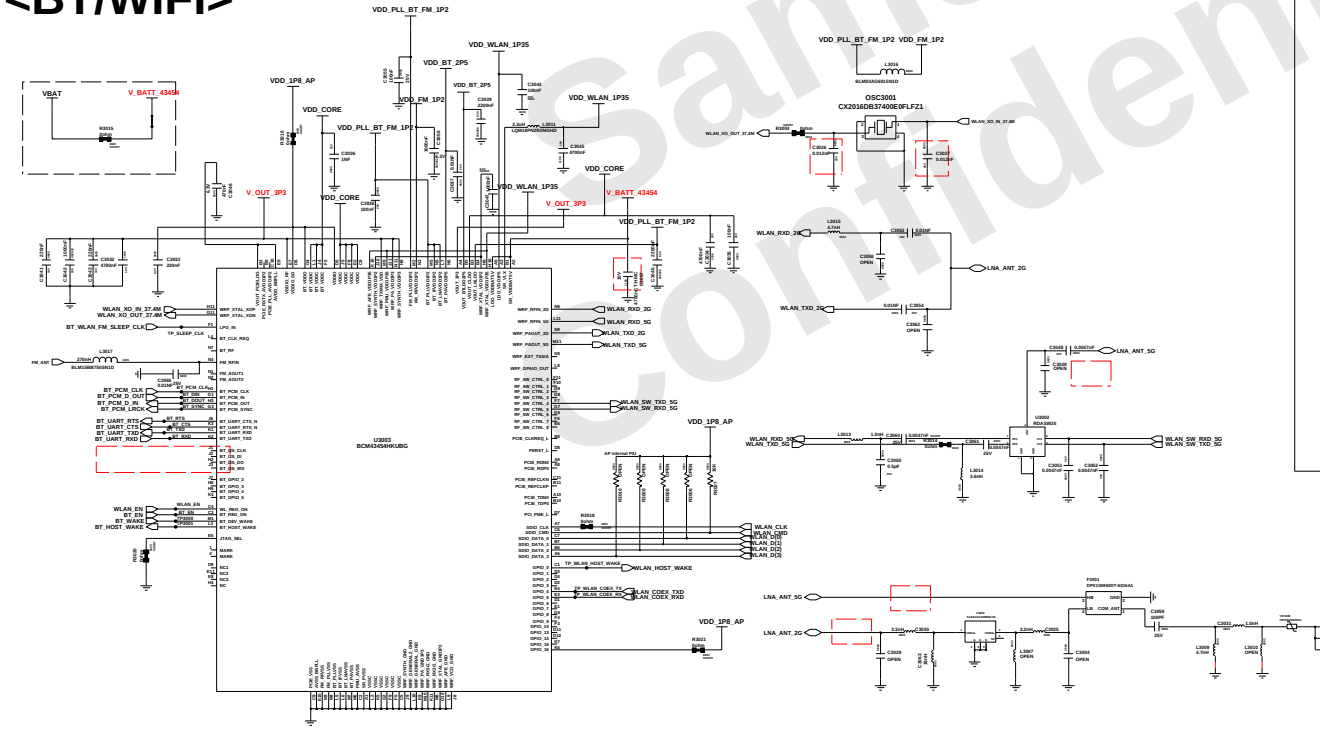

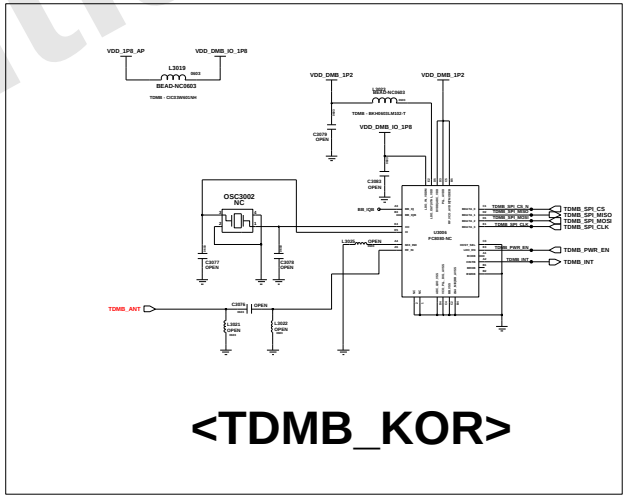

<TDMB_KOR>

GPS / NFC / BT / WIFI

Samsung Confidential

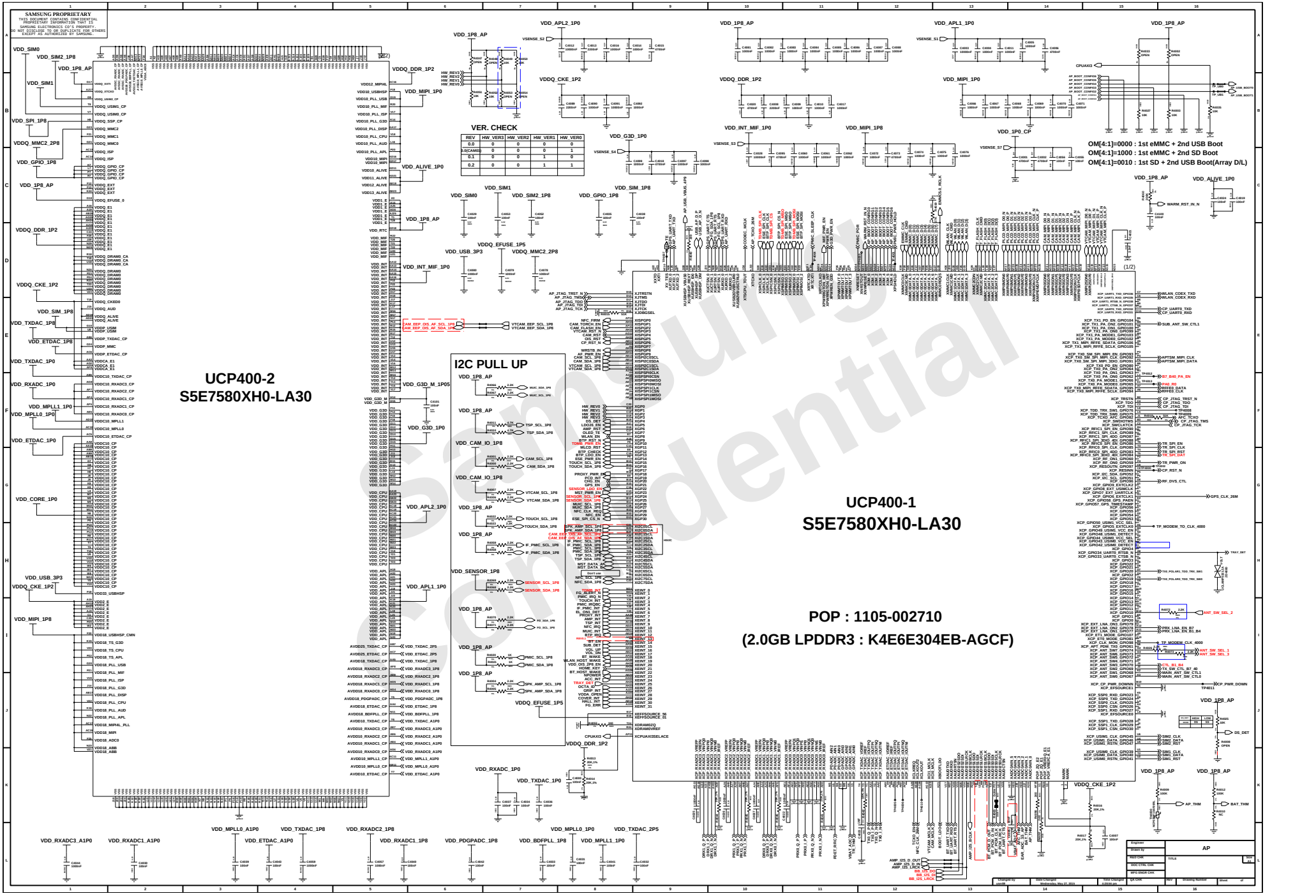
SAMSUNG PROPRIETARY
THIS DOCUMENT CONTAINS CONFIDENTIAL PROPRIETARY INFORMATION THAT IS SAMSUNG ELECTRONICS CO'S PROPERTY. DO NOT DISCLOSE TO OR DUPLICATE FOR OTHERS EXCEPT AS AUTHORIZED BY SAMSUNG.
UCP400-2
S5E7580XH0-LA30
UCP400-1
S5E7580XH0-LA30
POP : 1105-002710
(2.0GB LPDDR3 : K4E6E304EB-AGCF)
VER. CHECK
REV | HW_VER3 | HW_VER2 | HW_VER1 | HW_VER0
0.0 | 0 | 0 | 0 | 0
0.1(CAM00) | 0 | 0 | 0 | 1
0.1 | 0 | 0 | 1 | 0
0.2 | 0 | 0 | 1 | 1
OM[4:1]=0000 : 1st eMMC + 2nd USB Boot
OM[4:1]=1000 : 1st eMMC + 2nd SD Boot
OM[4:1]=0010 : 1st SD + 2nd USB Boot(Array D/L)
I2C PULL UP
Samsung Confidential

SAMSUNG CONFIDENTIAL
Unpublished work - All rights reserved.
PROPRIETARY INFORMATION MAY BE CONTAINED
SAMSUNG ELECTRONICS CO'S PROPERTY.
ALL USE, DISCLOSURE AND/OR REPRODUCTION NOT
EXCEPT AS AUTHORIZED BY SAMSUNG.

POWER

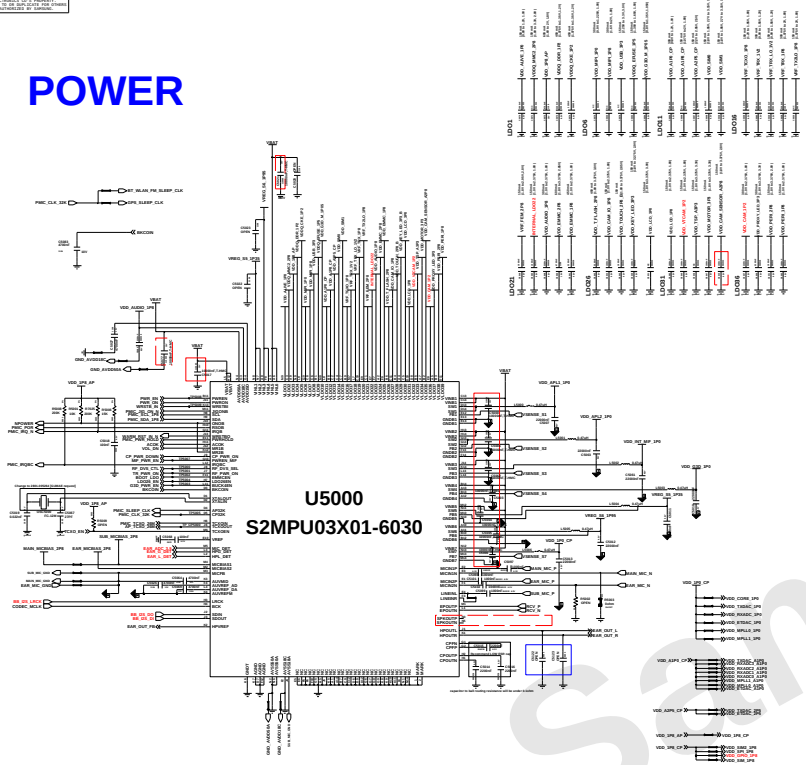

U5000
S2MPU03X01-6030

PMIC

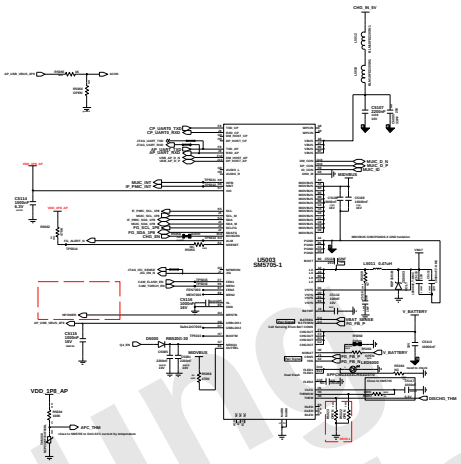

IF PMIC (SM5705)

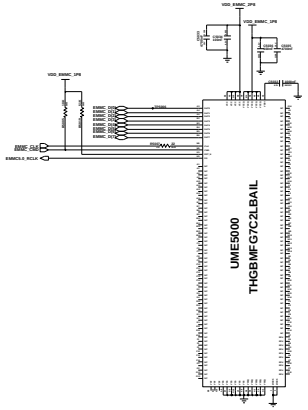

UME5000
THGBMFG7C2LBAIL

16GB eMMC 5.0 MLC

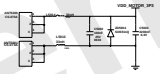

MOTOR(9pi 3.4T) LDO & CON

SIM & SD

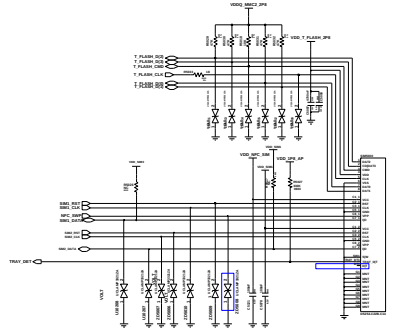

Battery Connector

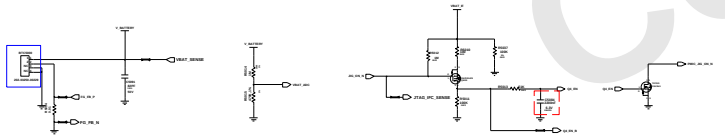

MST

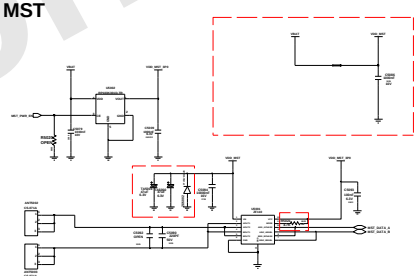

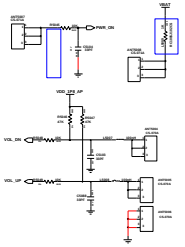

PWR KEY / VOL KEY

PCB JTAG

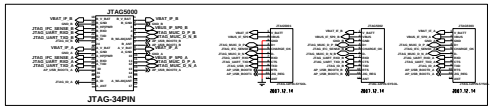

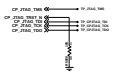

CP JTAG

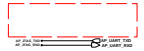

AP JTAG

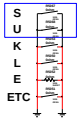

S U K L E ETC

Samsung Confidential

SAMSUNG CONFIDENTIAL
THIS DOCUMENT CONTAINS CONFIDENTIAL PROPRIETARY INFORMATION THAT IS SAMSUNG ELECTRONICS CO'S PROPERTY. DO NOT DISCLOSE TO OR DUPLICATE FOR OTHERS EXCEPT AS AUTHORIZED BY SAMSUNG.

AUDIO

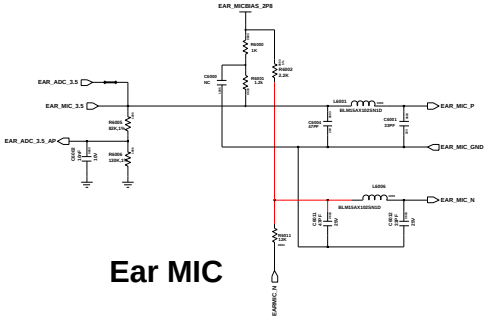

Ear MIC

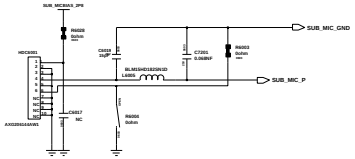

SUB MIC

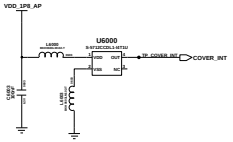

Cover Detect

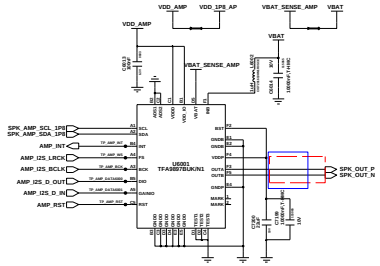

Audio amp

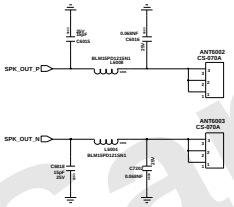

SPK Connector

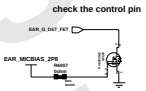

EAR DETECT

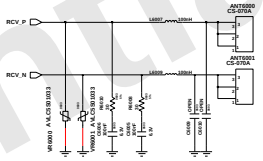

RCV

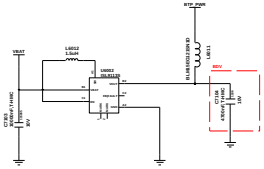

BTP DC-DC

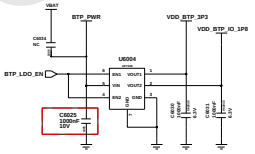

BTP OCP and PWR

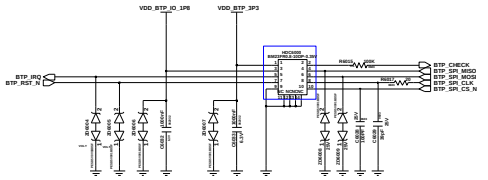

BTP IF Conn

Samsung Confidential

SAMSUNG ELECTRONICS

user89|swcad89|10.253.20.115|20151111-225649

SAMSUNG CONFIDENTIAL
THIS DOCUMENT CONTAINS CONFIDENTIAL AND PROPRIETARY INFORMATION OF SAMSUNG ELECTRONICS CO.® PROPERTY. DO NOT DISCLOSE TO OR DUPLICATE FOR OTHERS EXCEPT AS AUTHORIZED BY SAMSUNG.

CAMERA

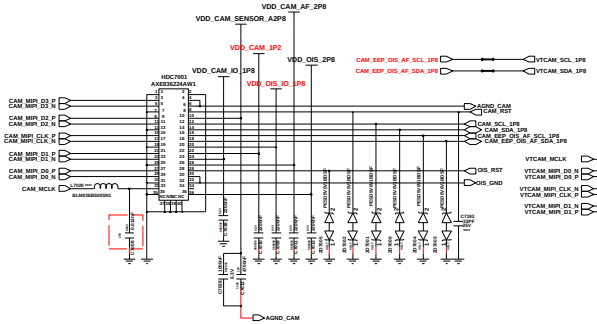

13M_Camera Connector (MIPI)

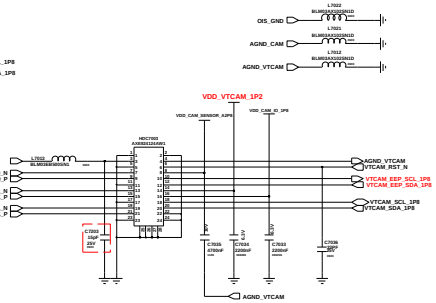

VT_CAMERA (5M)

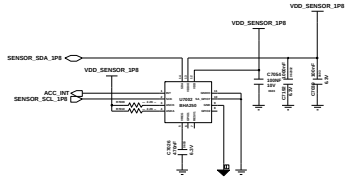

Sensor Hub integrated Accel Sensor

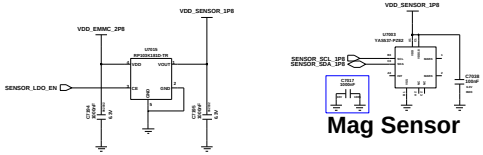

Mag Sensor

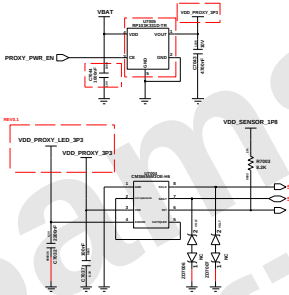

Proxy +RGB Sensor

DISPLAY

OCTA CONNECTOR

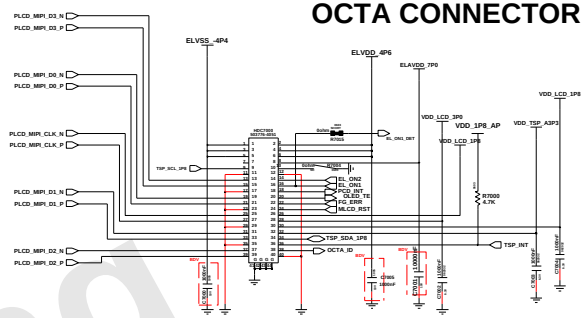

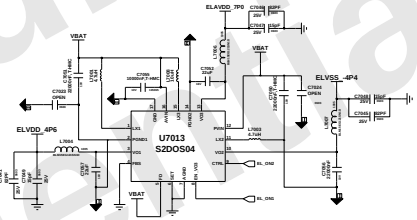

HD OCTA DC-DC

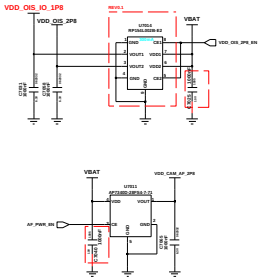

OIS AF LDO

IF SUB PBA Connector

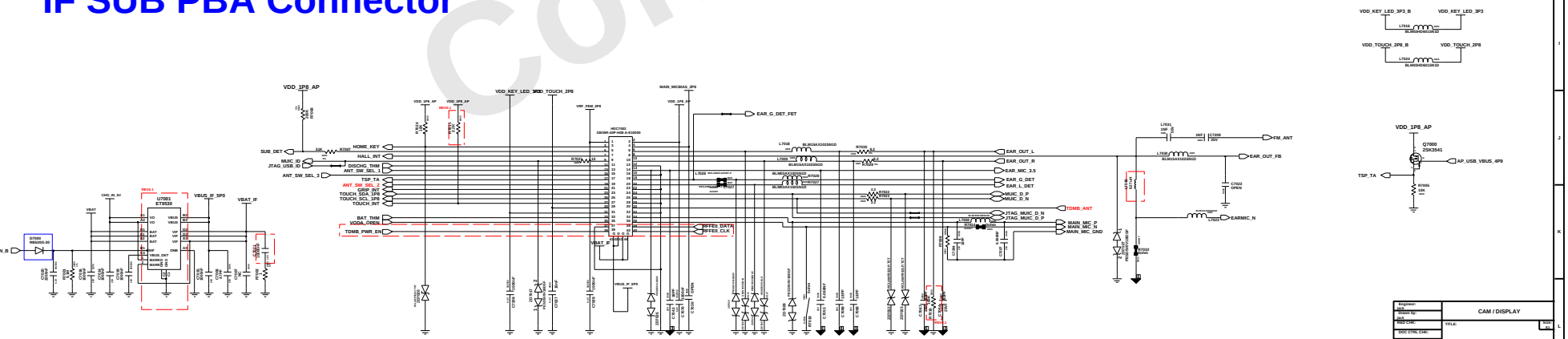

Samsung Confidential

Setup(2015-05-20)_HHP

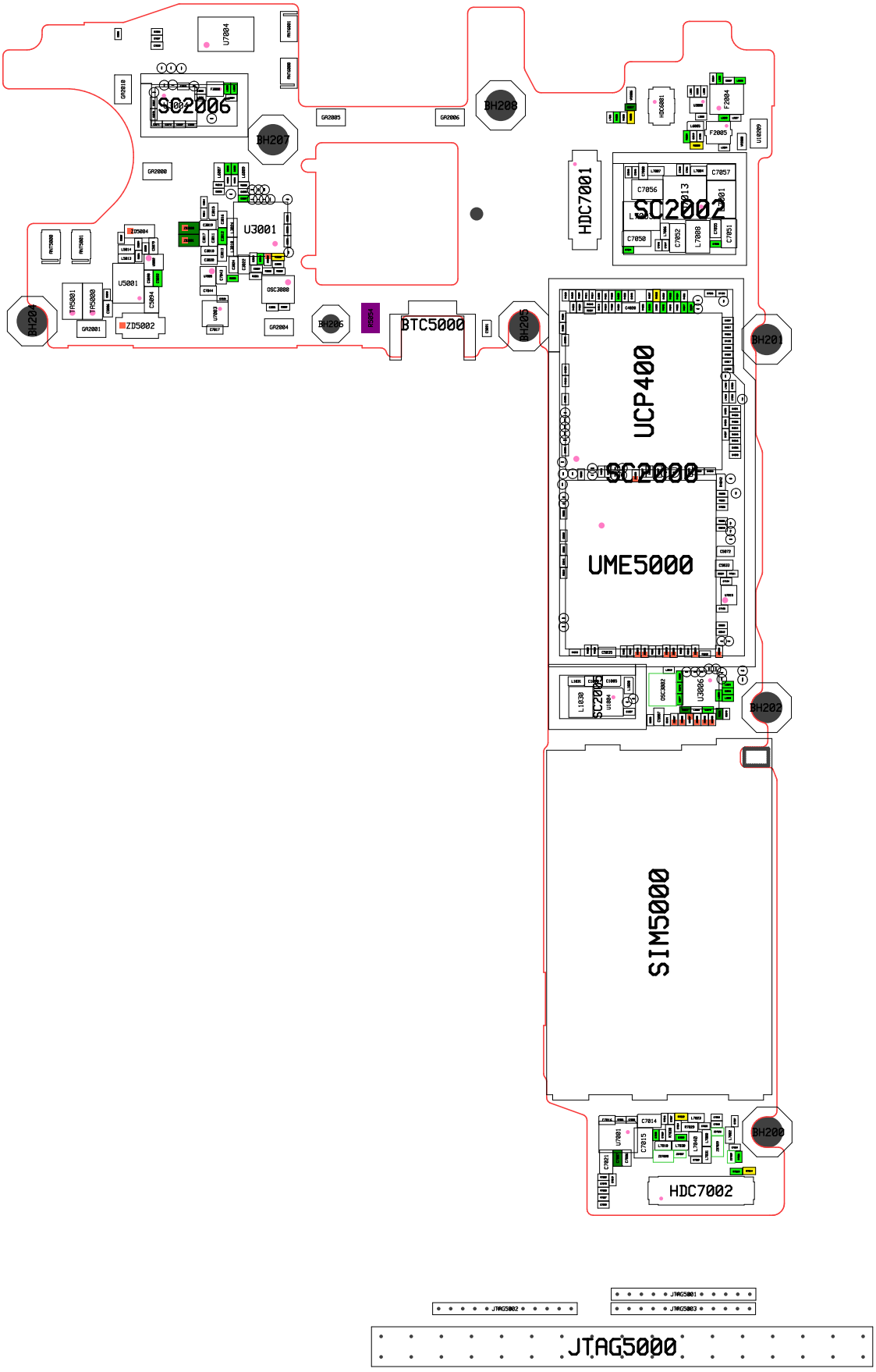

2007-010856(R5054) : Check! Bott
om Surface of Component
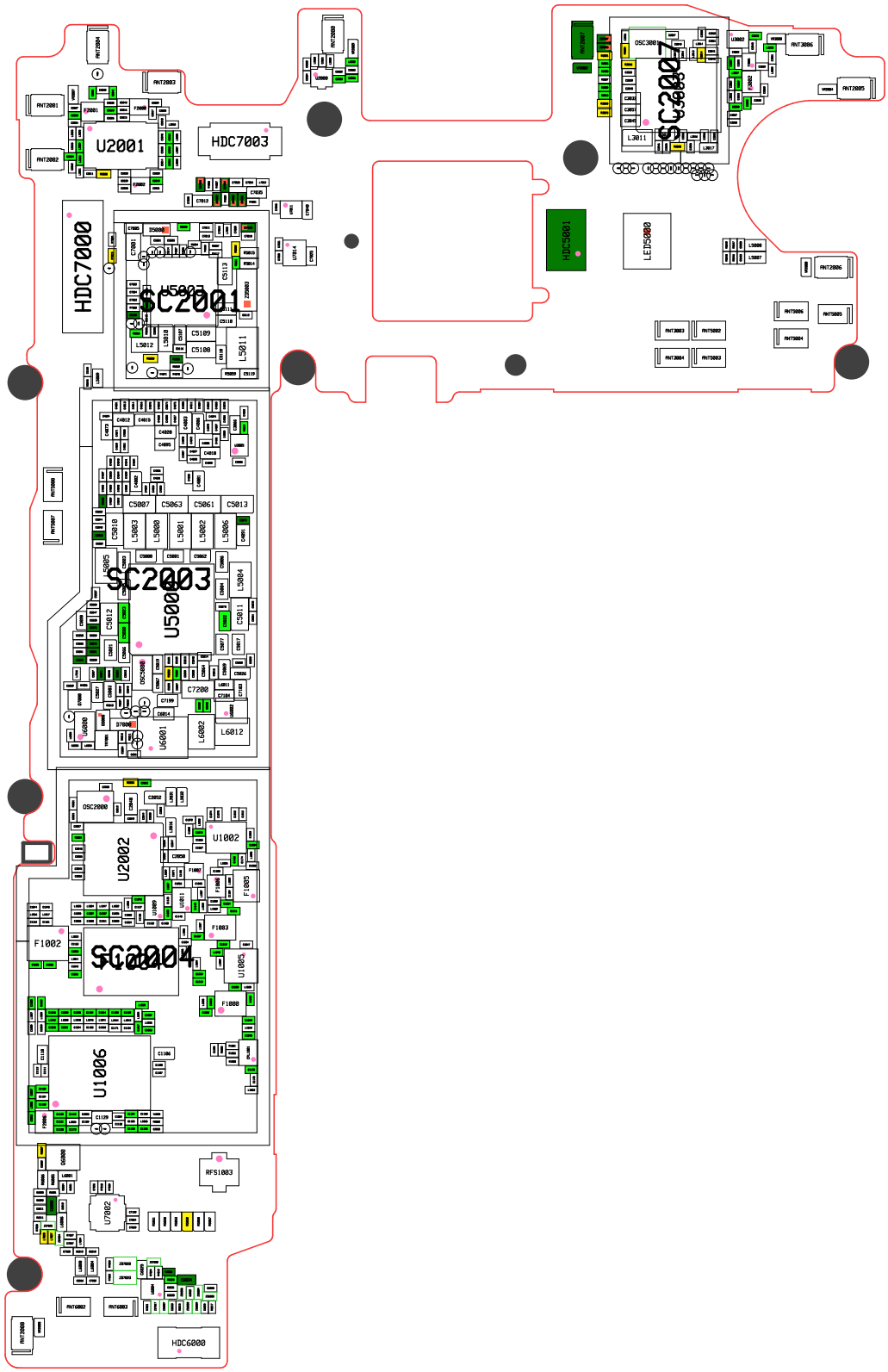
Setup(2015-05-20)_HHP