# [A5] SM-A500G/DS REV1.1_SIM BOM

2014.11.04.

Samsung Confidential

sheet01 : RF PAM
sheet02 : WTR1605L or WTR1605(TRANCEIVER), BT/WIFI, GPS, NFC
sheet03 : MSM8916 or MSM8216(AP)
sheet04 : PM8916(PMIC),eMCP
sheet05 : AUDIO, SUB PBA CONNECTOR
sheet06 : 5" HD OCTA, CAM PART, SD CARD, MOT
sheet07 : SENSOR, Charger, MUIC

| | | | | | | | |
|---|---|---|---|---|---|---|---|
| Engineer | | | | | | | |
| Drawn by | | | | | | | |
| R&D CHK | | | | | TITLE | | Size A2 |
| DOC CTRL CHK | | | | | SM-A500F(A5 EUR LTE) | | |
| MFG ENGR CHK | | | | | | | |
| QA CHK | Changed by | Date Changed | | REV | Drawing Number | Sheet | 0/8 |

user120|swcad120|10.252.41.253|20141104-185952

SAMSUNG CONFIDENTIAL
THIS DOCUMENT CONTAINS CONFIDENTIAL INFORMATION AND PROPRIETARY TO SAMSUNG ELECTRONICS CO'S PROPERTY. DO NOT DISCLOSE TO OR DUPLICATE FOR OTHERS EXCEPT AS AUTHORIZED BY SAMSUNG.

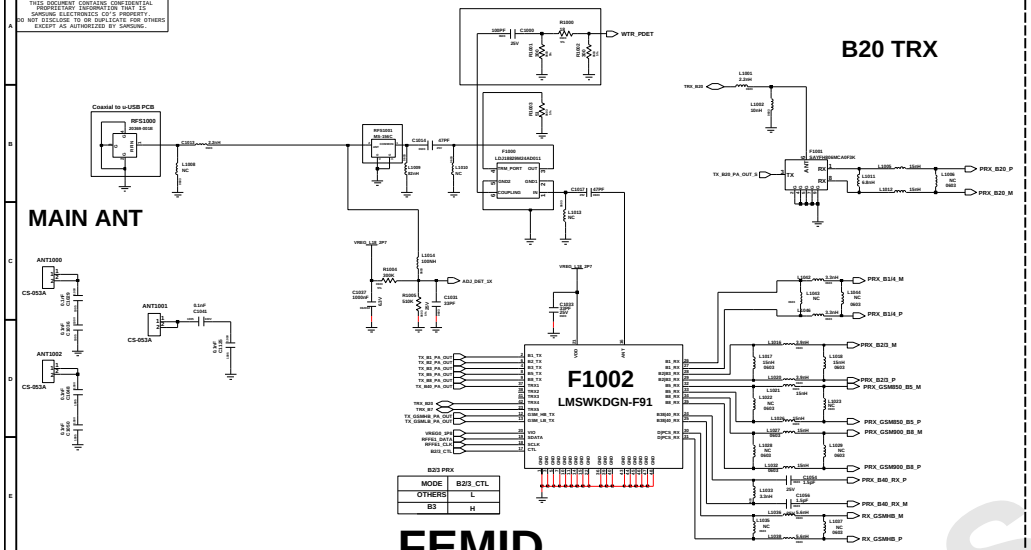


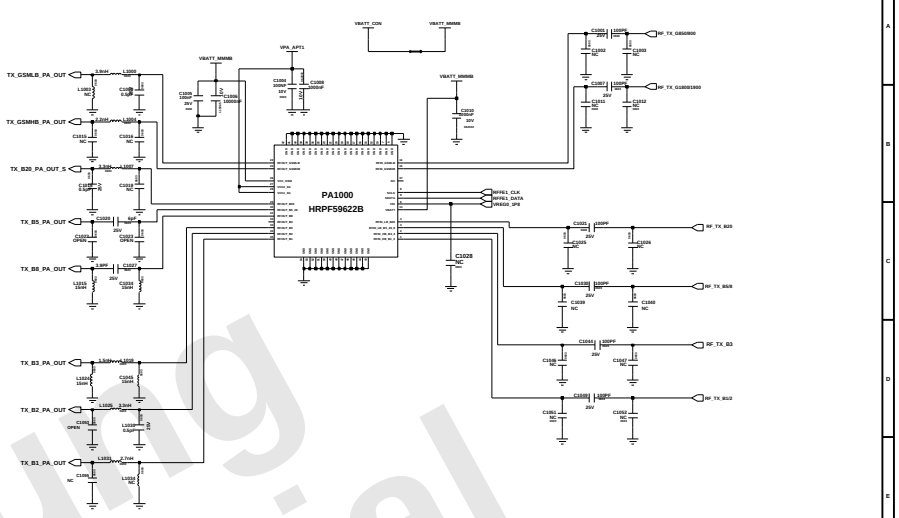


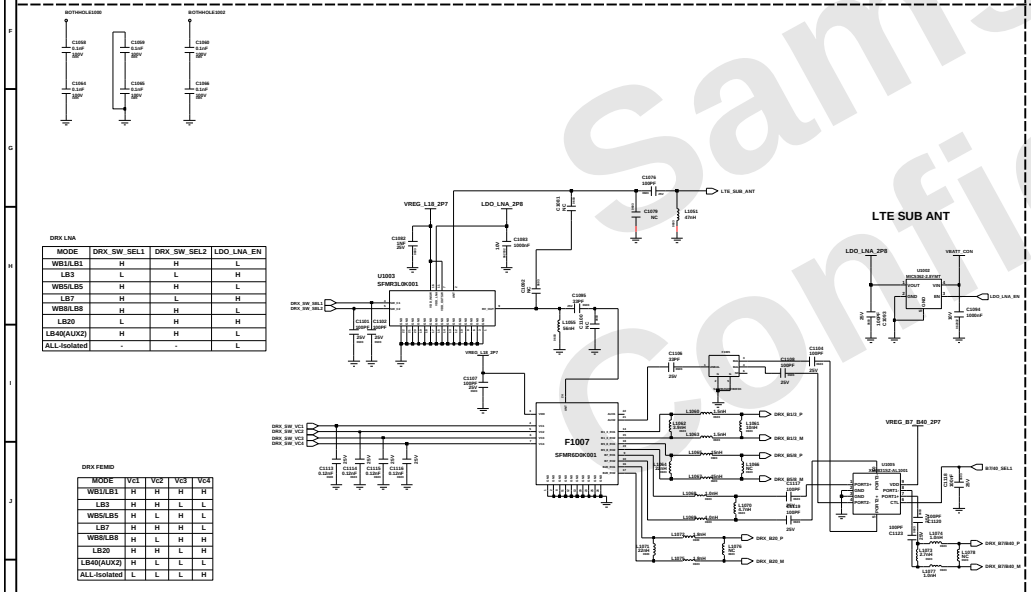


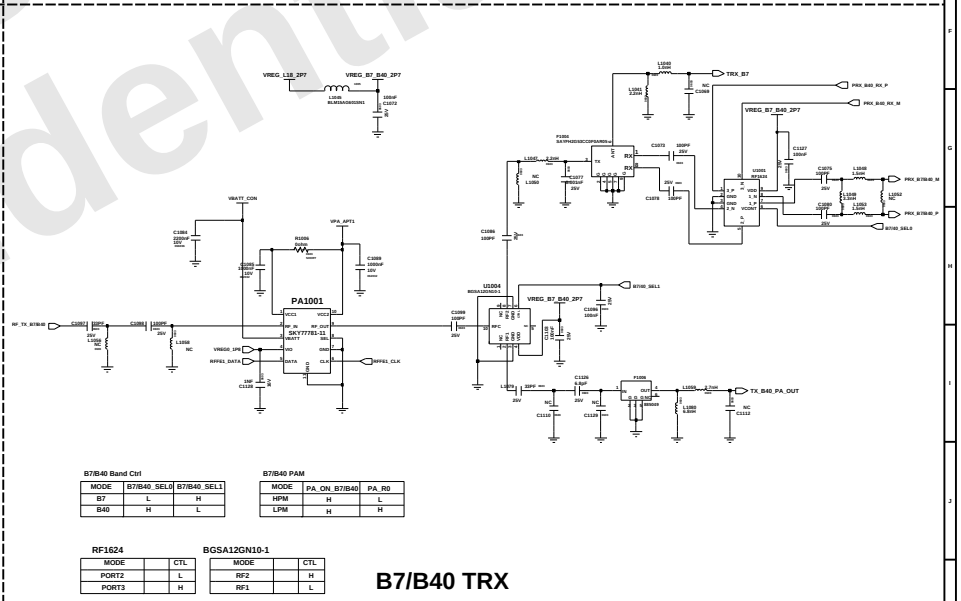


| DRX LNA | | | |
|---|---|---|---|
| MODE | DRX_SW_SEL1 | DRX_SW_SEL2 | LDO_LNA_EN |
| WB1/LB1 | H | H | L |
| LB3 | L | L | H |
| WB5/LB5 | H | H | L |
| LB7 | L | H | H |
| WB8/LB8 | H | H | L |
| LB20 | L | H | H |
| LB40(AUX2) | H | H | L |
| ALL-isolated | - | - | L |

| DRX FEMID | | | | |
|---|---|---|---|---|
| MODE | Vc1 | Vc2 | Vc3 | Vc4 |
| WB1/LB1 | H | H | H | H |
| LB3 | H | H | L | L |
| WB5/LB5 | H | L | H | L |
| LB7 | H | H | H | L |
| WB8/LB8 | H | L | H | H |
| LB20 | H | H | L | H |
| LB40(AUX2) | H | L | L | L |
| ALL-isolated | L | L | L | H |

| B23 PRX | |
|---|---|
| MODE | B2/3_CTL |
| OTHERS | L |
| B3 | H |

| B7/B40 Band Ctrl | | |
|---|---|---|
| MODE | B7/B40_SEL0 | B7/B40_SEL1 |
| B7 | L | H |
| B40 | H | L |

| B7/B40 PAM | | |
|---|---|---|
| MODE | PA_ON_B7/B40 | PA_R0 |
| HPM | H | L |
| LPM | H | H |

| RF1624 | |
|---|---|
| MODE | CTL |
| PORT2 | L |
| PORT3 | H |

| BGSA12GN10-1 | |
|---|---|
| MODE | CTL |
| RF2 | H |
| RF1 | L |

| | |
|---|---|
| Engineer | |
| Model No. | AUDIO / MOTOR / KEY |
| R&D CHK: | TITLE: |
| DOC CTRL CHK: | SM-A500F(A5 EUR LTE) |
| MFG ENGR CHK: | |
| QA CHK: | Drawing Number |

| Changed By: | Date Changed: | Time Changed: |
|---|---|---|

Samsung Confidential

SAMSUNG CONFIDENTIAL
THIS DOCUMENT CONTAINS CONFIDENTIAL INFORMATION AND PROPRIETARY TO SAMSUNG ELECTRONICS CO'S PROPERTY. DO NOT DISCLOSE TO OR DUPLICATE FOR OTHERS EXCEPT AS AUTHORIZED BY SAMSUNG.

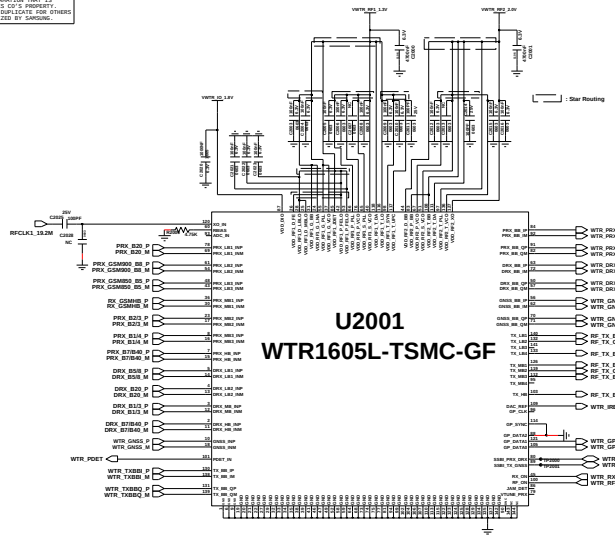


# RF Transceiver

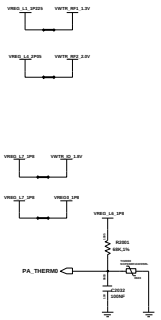


THERMISTER

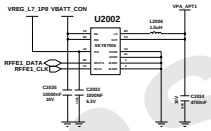


APT MODULATOR

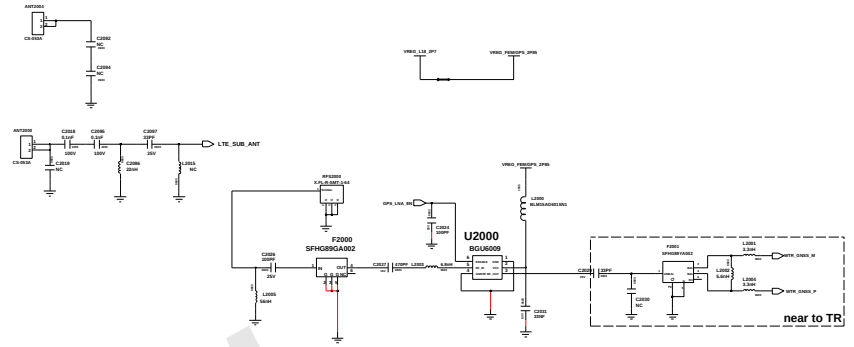


# GPS / GNSS

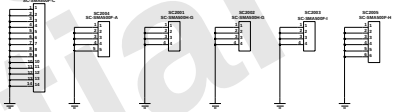

# SHIELDCAN

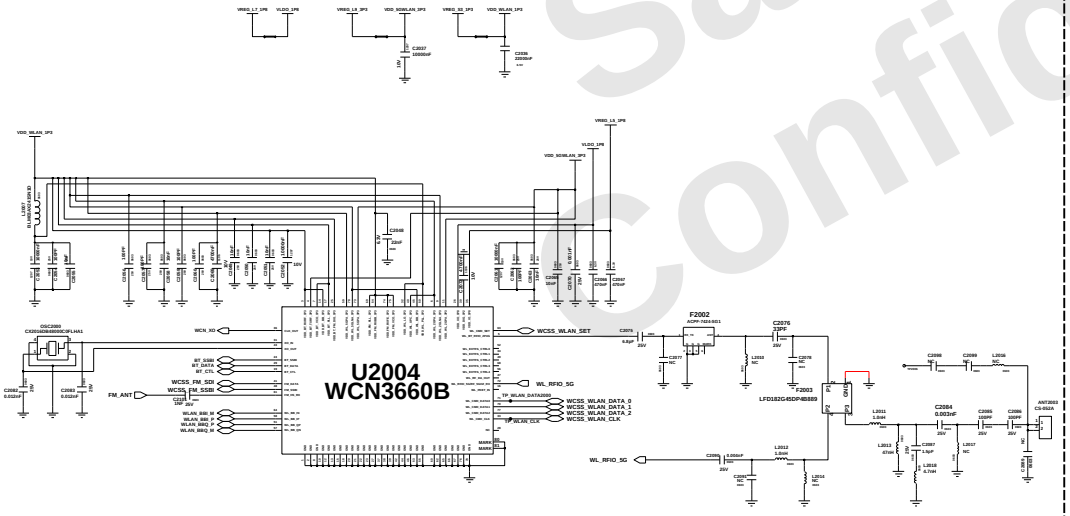


# BT/WIFI ANT

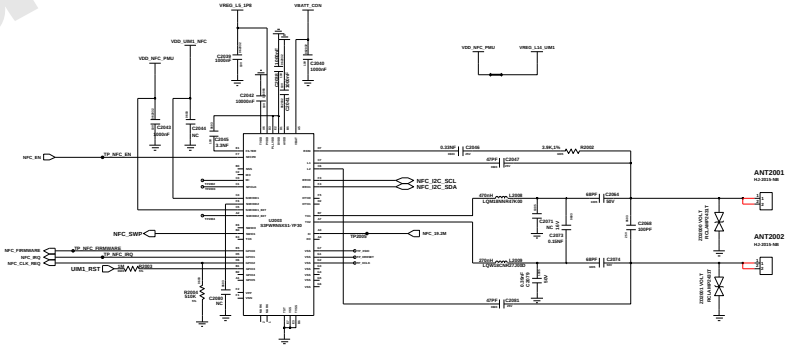

# NFC

| | |
|---|---|
| Engineer | CONNEOCTIVITY |
| Model No. | |
| R&D CHK. | TITLE: SM-A500F(A5 EUR LTE) |
| DOC CTRL CHK. | |
| MFG ENGR CHK. | |
| QA CHK. | Drawing Number |

Samsung Confidential

SAMSUNG CONFIDENTIAL
THIS DOCUMENT CONTAINS CONFIDENTIAL
PROPRIETARY INFORMATION THAT IS
SAMSUNG ELECTRONICS CO'S PROPERTY.
DO NOT DISCLOSE TO OR DUPLICATE FOR OTHERS
EXCEPT AS AUTHORIZED BY SAMSUNG.

# AP PART (MSM8916)

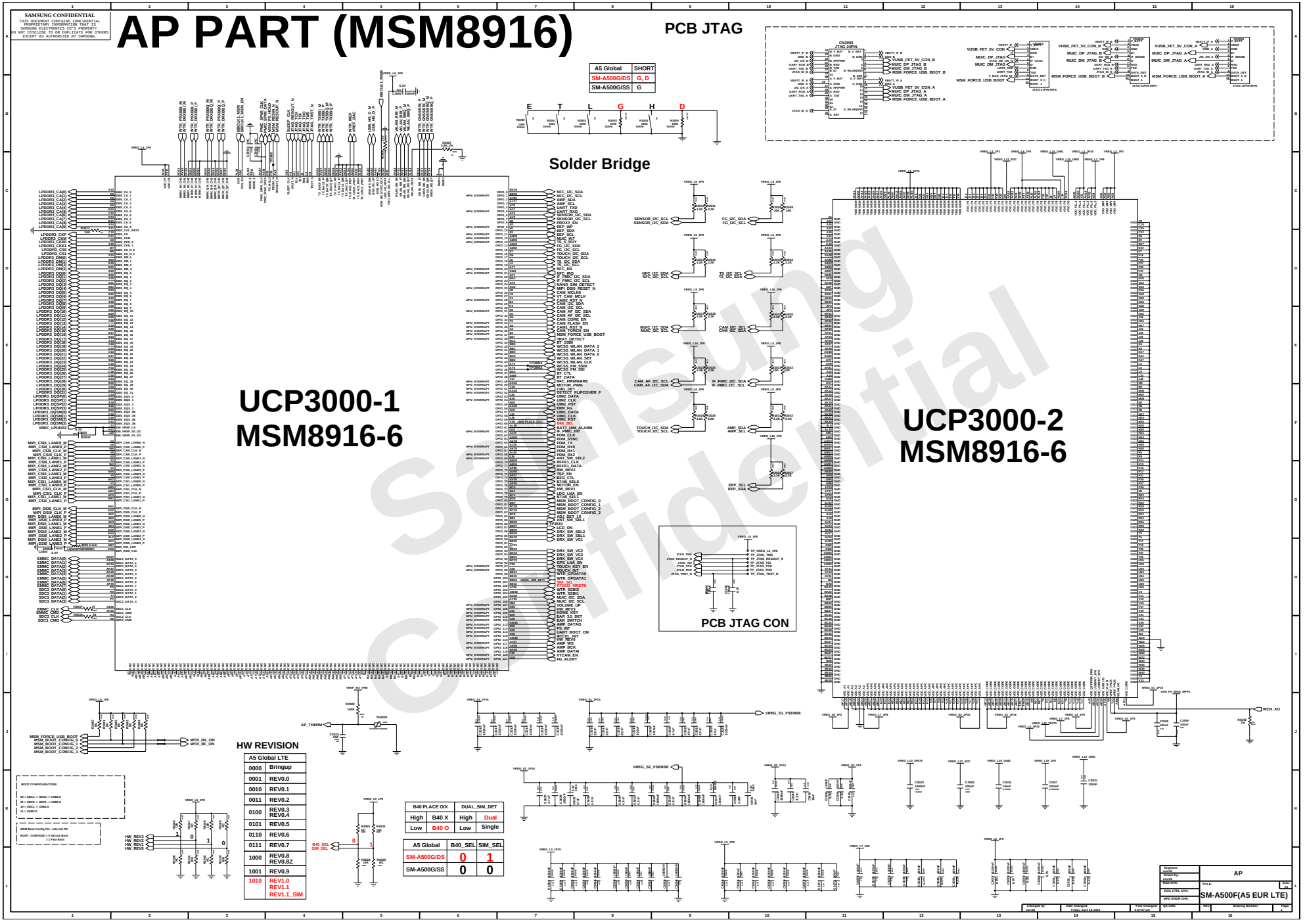


Samsung Confidential

SAMSUNG CONFIDENTIAL
THIS DOCUMENT CONTAINS CONFIDENTIAL INFORMATION AND PROPRIETARY TO SAMSUNG ELECTRONICS CO'S PROPERTY. DO NOT DISCLOSE TO OR DUPLICATE FOR OTHERS EXCEPT AS AUTHORIZED BY SAMSUNG.

# PMIC PART

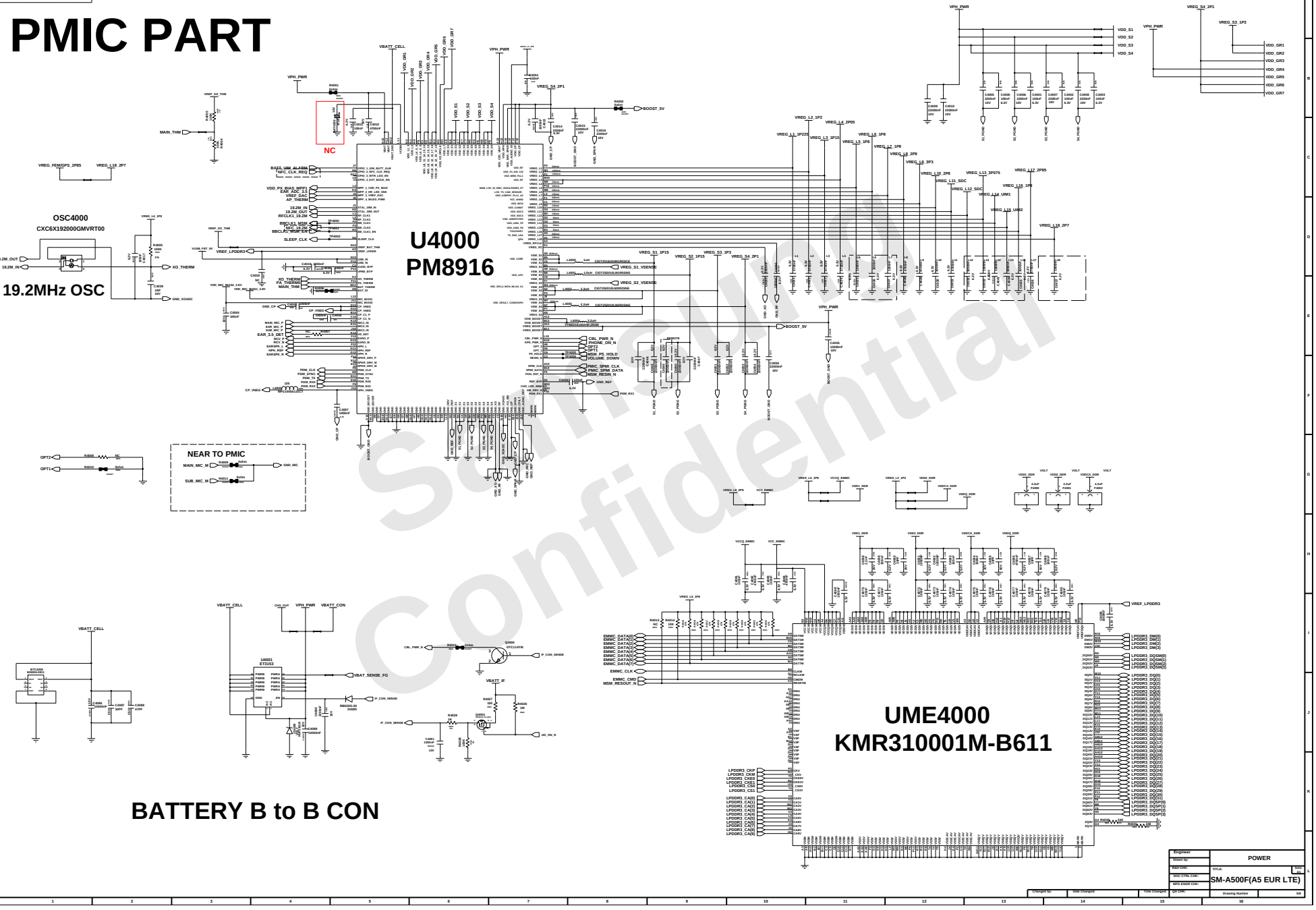


Samsung Confidential

| | |
|---|---|
| Engineer | POWER |
| Model No. | |
| R&D CHK. | TITLE: |
| DOC CTRL CHK. | SM-A500F(A5 EUR LTE) |
| MFG ENGR CHK. | |
| QA CHK. | Drawing Number |

SAMSUNG CONFIDENTIAL
THIS DOCUMENT CONTAINS CONFIDENTIAL INFORMATION AND PROPRIETARY TO SAMSUNG ELECTRONICS CO'S PROPERTY. DO NOT DISCLOSE TO OR DUPLICATE FOR OTHERS EXCEPT AS AUTHORIZED BY SAMSUNG.

# AUDIO PART

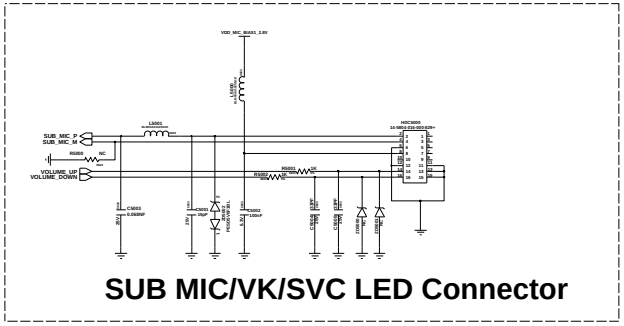

SUB MIC/VK/SVC LED Connector

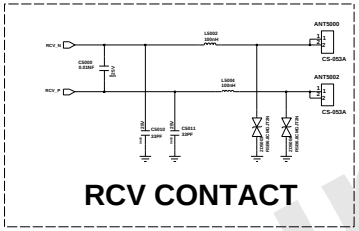

RCV CONTACT

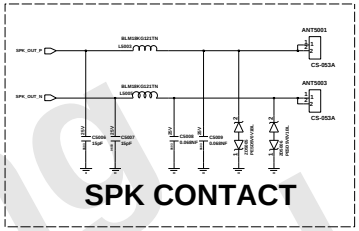

SPK CONTACT

## IF SUB PBA CONNECTOR

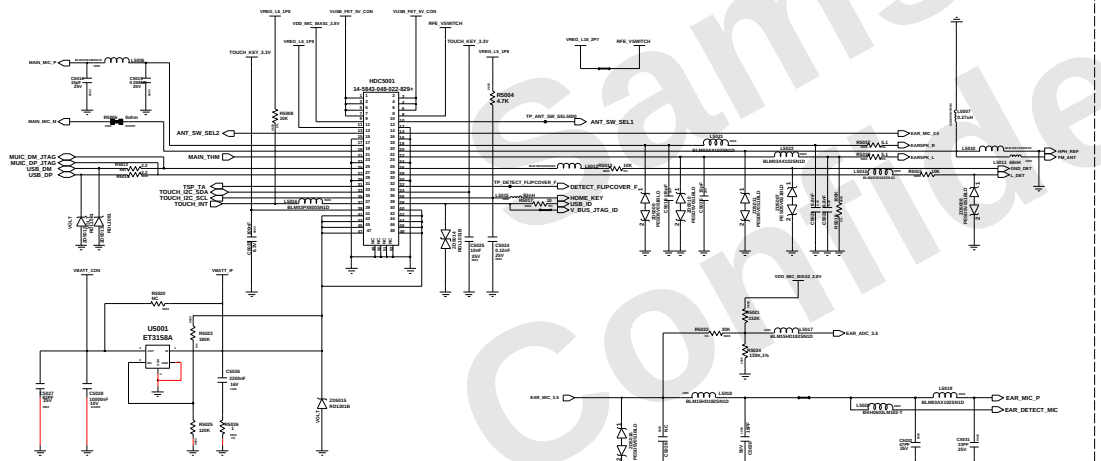

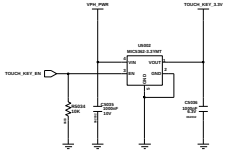

TOUCH KEY LDO

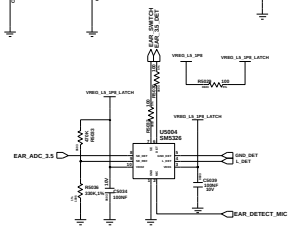

E/J DET IC

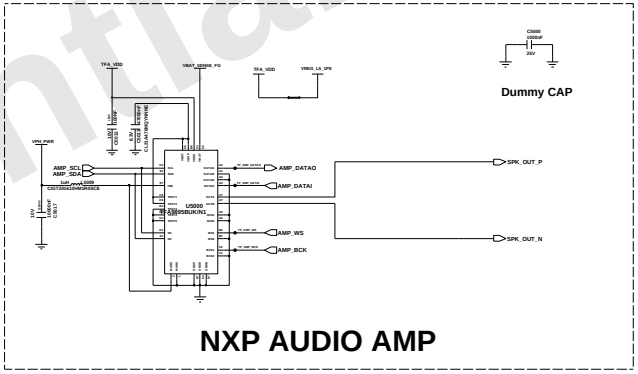

NXP AUDIO AMP

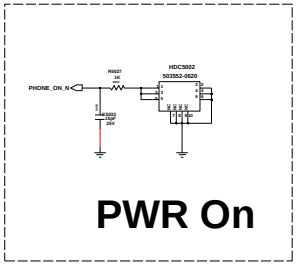

PWR On

Samsung Confidential

| | | | |
|---|---|---|---|
| Engineer | | AUDIO / MOTOR / KEY | |
| Model No. | | | |
| R&D CHK: | | TITLE: | SIZE: A3 |
| DOC CTRL CHK: | | SM-A500F(A5 EUR LTE) | |
| MFG ENGR CHK: | | | |
| QA CHK: | | Drawing Number | 6/8 |

| Changed By: | Date Changed: | Time Changed: |
|---|---|---|

SAMSUNG CONFIDENTIAL
THIS DOCUMENT CONTAINS CONFIDENTIAL PROPRIETARY INFORMATION THAT IS SAMSUNG ELECTRONICS CO'S PROPERTY. DO NOT DISCLOSE TO OR DUPLICATE FOR OTHERS EXCEPT AS AUTHORIZED BY SAMSUNG.

# CAMERA PART

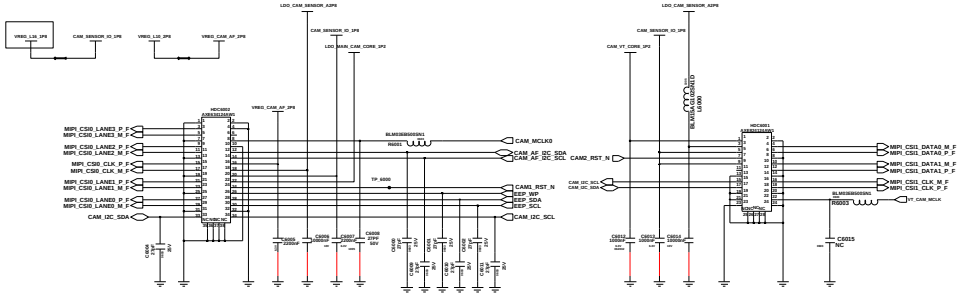
13M_CAM Connector (MIPI)
5M_VT_CAM

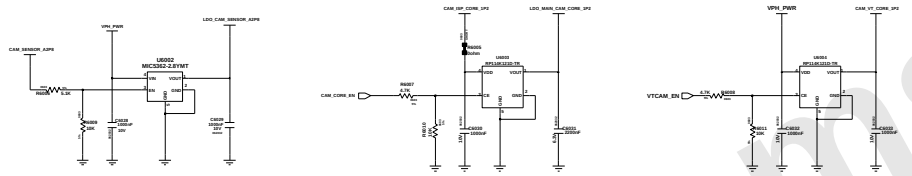
MAIN_CAM_A_LDO
MAIN_CAM_CORE_LDO
VT CAM LDO

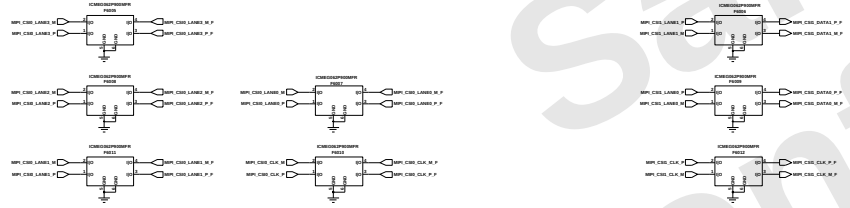
MAIN_CAM_EMI_FILTER
VT_CAM_EMI_FILTER

# DISPLAY PART

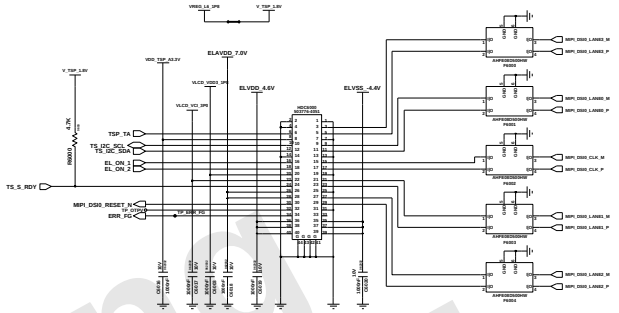
OCTA CONN

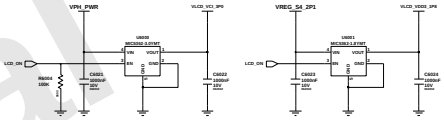
OCTA LDO

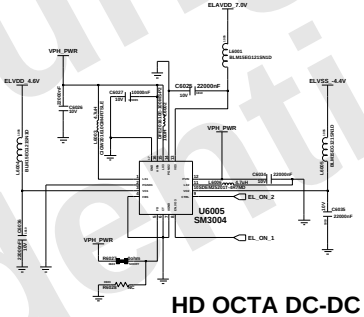
HD OCTA DC-DC

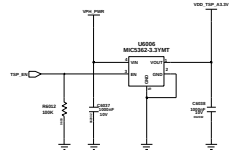
TSP LDO

# SIM / SD CARD PART

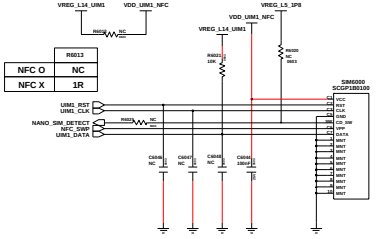
TRAY NANO SIM1 SOCKET

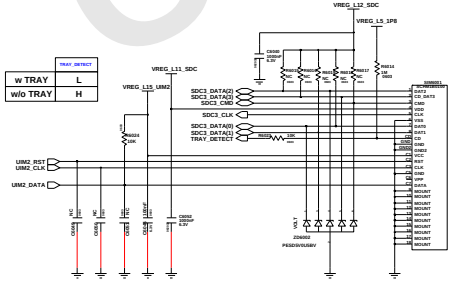
TRAY HYBRID(SIM2/SD) SOCKET

# MOTOR PART

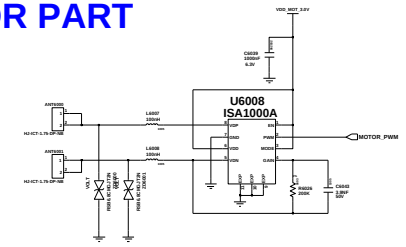
Haptic Driver

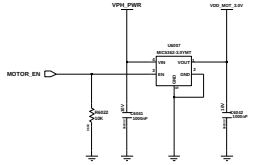
MOTOR LDO(150mA)

Samsung Confidential

| | |
|---|---|
| Engineer: | CAMERA / LCD / SIM,SD CON |
| Drawn by: | |
| RED CHK: | TITLE: SM-A500F(A5 EUR LTE) |
| DOC CTRL CHK: | |
| MFG ENGR CHK: | |
| Changed by: | Date Changed: |
| Time Changed: | QA CHK: |
| REV: | Drawing Number: |

user120|swcad120|10.252.41.253|20141104-185958

SAMSUNG CONFIDENTIAL
THIS DOCUMENT CONTAINS CONFIDENTIAL PROPRIETARY INFORMATION THAT IS SAMSUNG ELECTRONICS CO'S PROPERTY. DO NOT DISCLOSE TO OR DUPLICATE FOR OTHERS EXCEPT AS AUTHORIZED BY SAMSUNG.

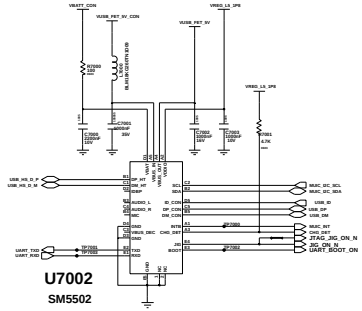


MUIC

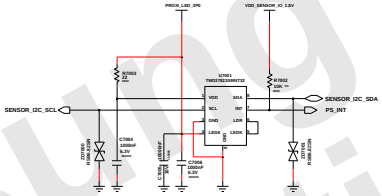

Proximity Detector

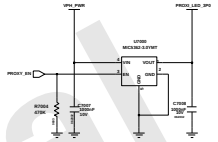

Proximity LDO

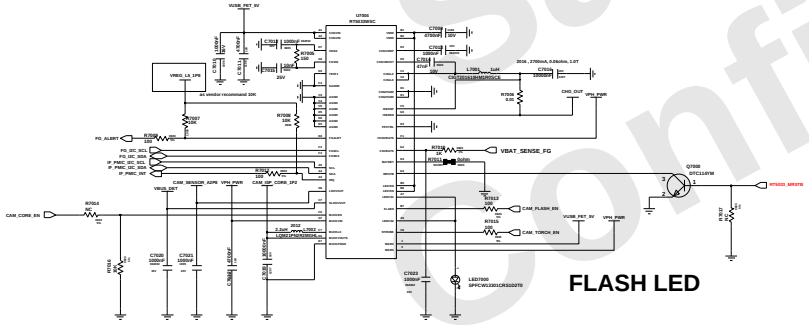

FLASH LED

IF PMIC (RT5033 @ Richtek)

(Charger / Fuel Gauge / Flash LED / CAM DCDC)

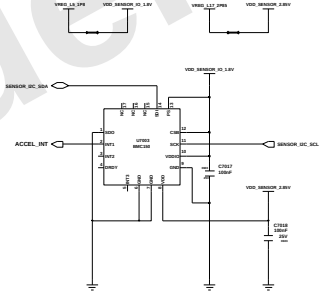

ACC+MAG SENSOR

Samsung Confidential

| | |
|---|---|
| Engineer | AUDIO / MOTOR / KEY |
| Drawn by: | |
| R&D Chk: | TITLE: SM-A500F(A5 EUR LTE) |
| DOC CTRL Chk: | |
| MFG ENGR Chk: | |
| Drawing Number | 6/8 |

Changed by: | Date Changed: | Time Changed: | QA Chk:

Model : SM-A500G/DS
<TOP>

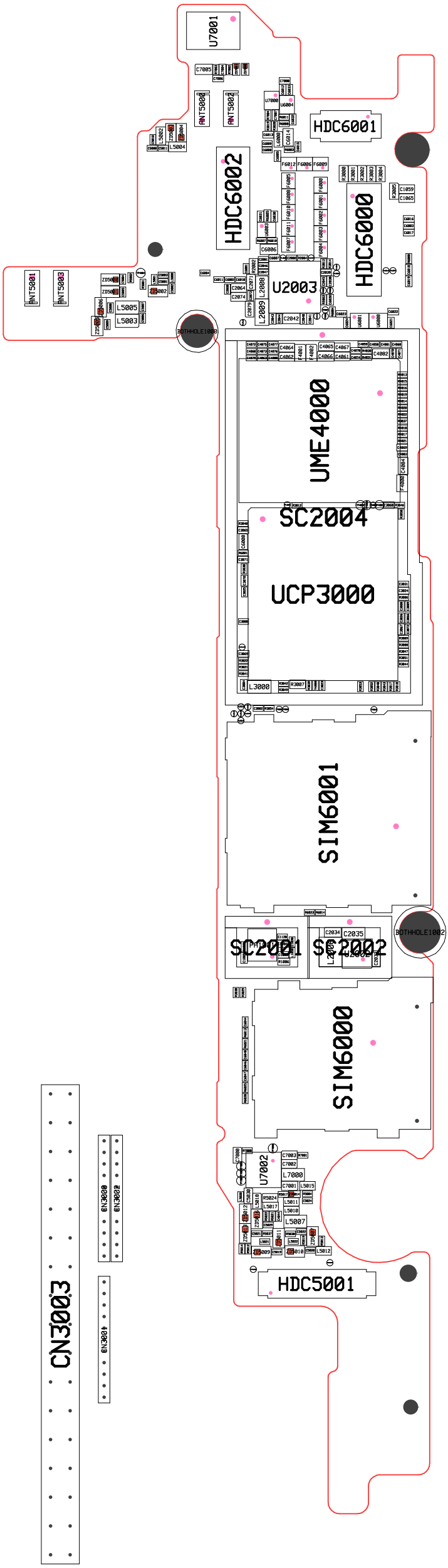


| | | | | |
|---|---|---|---|---|
| | | | | |
| | ○ | | | |

| | | | | |
|---|---|---|---|---|
| | | | | |
| | ○ | | | |

| | | | | |
|---|---|---|---|---|
| | | | | |
| | ○ | | | |

| | | | | |
|---|---|---|---|---|
| | | | | |
| | ○ | | | |

| | | | | |
|---|---|---|---|---|
| | | | | |
| | ○ | | | |

| | | | | |
|---|---|---|---|---|
| | | | | |
| | ⊖ | | | |

| | | | | |
|---|---|---|---|---|
| | | | | |
| | ○ | | | |

| | | | | |
|---|---|---|---|---|
| | | | | |
| | ○ | | | |

| | | | | |
|---|---|---|---|---|
| | | | | |
| | ○ | | | |

| | | | | |
|---|---|---|---|---|
| | | | | |
| | ○ | | | |

| | | | | |
|---|---|---|---|---|
| | | | | |
| | ◐ | | | |
| | ⊕ | | | |
| | ◎ | | | |
| | □ | | | |
| | ⊠ | | | |
| | ⊞ | | | |
| | + | | | |

Model : SM-A500G/DS
<BOTTOM>

| | | | | |
|---|---|---|---|---|
| | | | | |
| | | | ○ | |

| | | | | |
|---|---|---|---|---|
| | | | | |
| | | | ○ | |

| | | | | |
|---|---|---|---|---|
| | | | | |
| | | | ○ | |

| | | | | |
|---|---|---|---|---|
| | | | | |
| | | | ○ | |

| | | | | |
|---|---|---|---|---|
| | | | | |
| | | | ○ | |

| | | | | |
|---|---|---|---|---|
| | | | | |
| | | | ⊖ | |

| | | | | |
|---|---|---|---|---|
| | | | | |
| | | | ○ | |

| | | | | |
|---|---|---|---|---|
| | | | | |
| | | | ○ | |

| | | | | |
|---|---|---|---|---|
| | | | | |
| | | | ○ | |

| | | | | |
|---|---|---|---|---|
| | | | | |
| | | | ○ | |
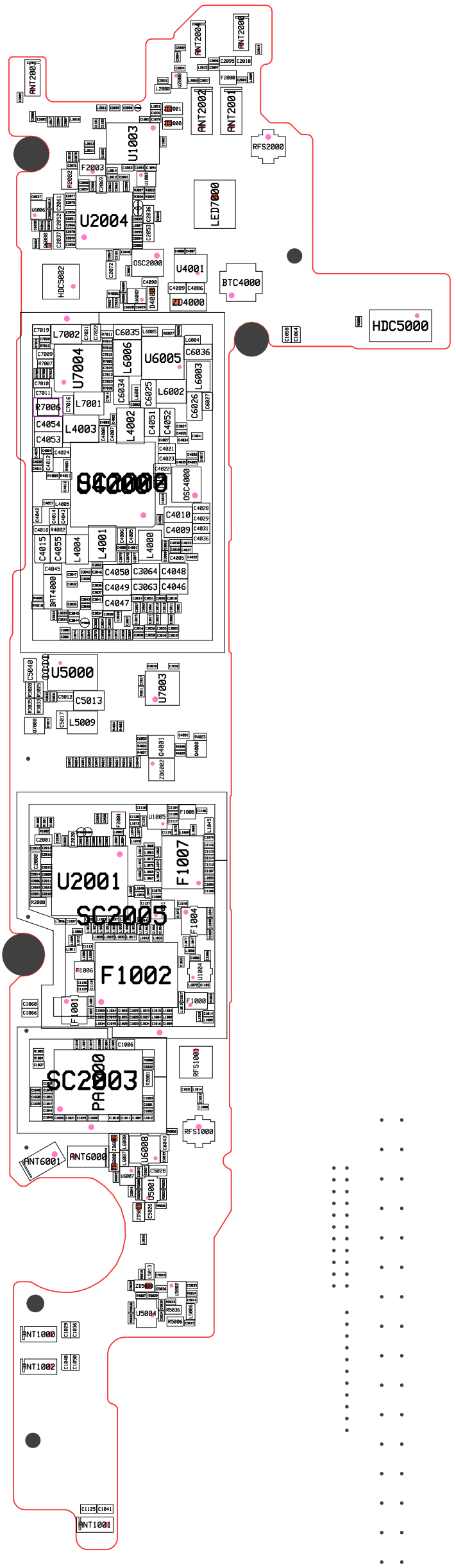
| | | | | |
|---|---|---|---|---|
| | | | | |
| | | | ◐ | |
| | | | ⊕ | |
| | | | ◎ | |
| | | | □ | |
| | | | ⊠ | |
| | | | ⊞ | |
| | | | + | |