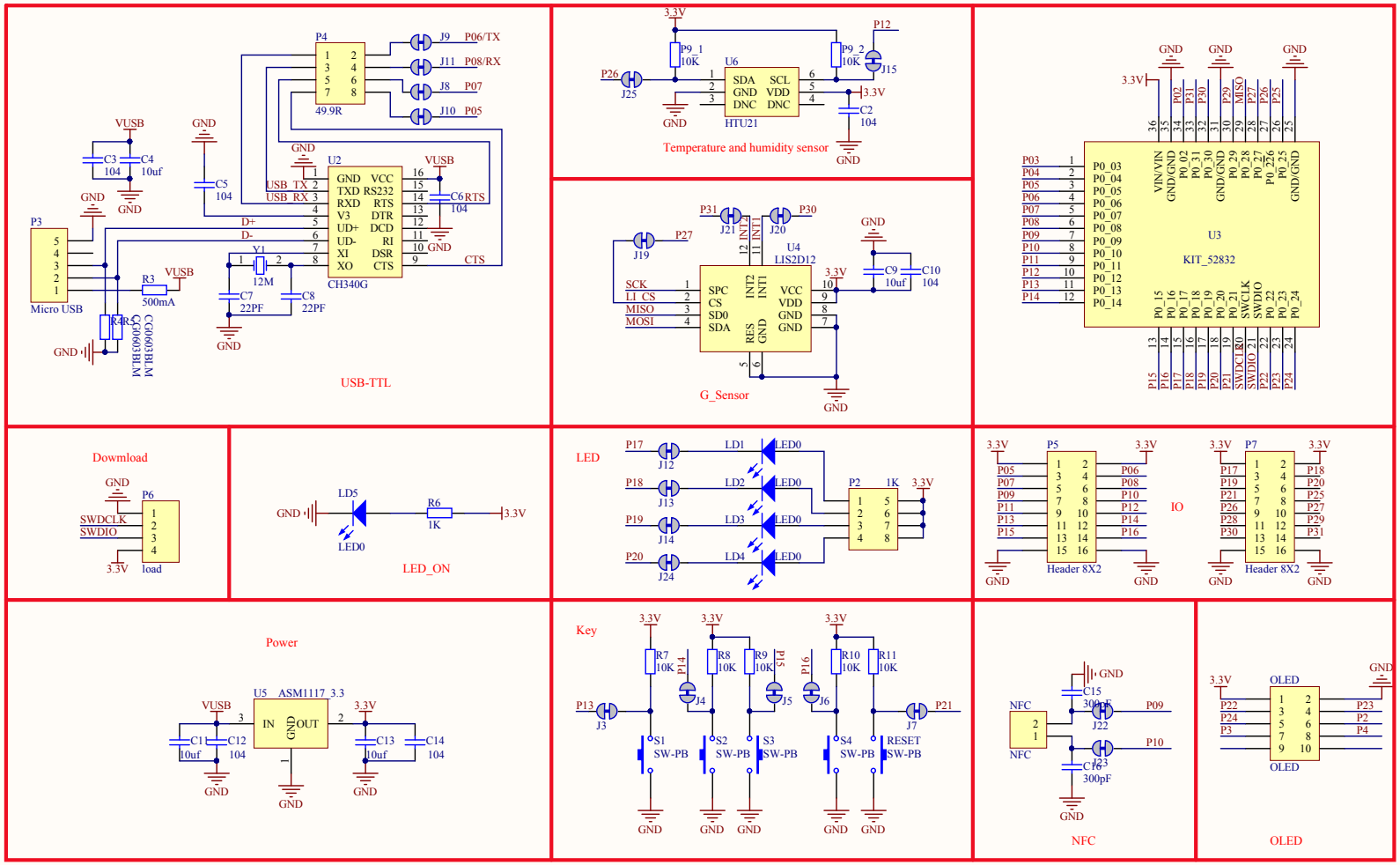

Title	TN001_Kit	
Size A3	Number The tree	Revision v1.10
Date: 2016/10/8		Sheet of
File: G:\nRF_2.4G\..\kit_V5_borad.SchDoc		Drawn By: Watch