# Lab Report

Awais Ansari & Dominic Nieder

## Table of contents

**1 Research topic** **1**
1.1 On finding a topic . . . . . 1
1.1.1 Dominic: Literature collection . . . . . 2
1.1.2 Awais: Literature collection . . . . . 6

## 1 Research topic

Our experiment contains topics on

- laser physics: external-cavity diode-laser (ECDL)
- atomic physics: $^{87}\mathrm{Rn}(I = 3/2)$
- optics: alignment and optical components
  - linear polarizer
  - quarter wave plate
  - half wave plate
  - lense
  - Fabry-Pérot interferometer
- spectroscopy techniques: Absorption, Flourescence, and Saturation
  - ...
- spectroscopy: Fabry-Pérot interferometer

## 1.1 On finding a topic

We find it difficult to pin my interest onto one specific topic. We would like to set up an experiment capable to observe the atomic structure, i.e. to see the fine structure– or hyperfine structure splitting. To set up an experiment that is capable of measuring these incredibly detailed measurements physical structures we need to focus on the tools that we use to analyse the atomic structure of Rubidium.

In our opinion, to make the extremely detailed measurement of a atomic structure, a detailed understanding of the external-cavity diode-laser (ECDL) and its emission spectrum. Detailed knowledge on the diode laser should provide us with the means to setup a ideal frequency to observe the fine–, hyperfine structure. But how do we characterize the light of the ECDL?

This brings us to the issue on spectroscopy. The Fabry-Pérot interferometer only measures relative spectra – though very precisely. To correctly characterize the emitted light of the ECDL, it seems advantageous to gain a deep understanding and a characterization of the Fabry-Pérot interferometer, which allows for the full characterization of the diode laser. The characterization of the ECDL go hand-in-hand with the characterization of the Fabry-Pérot interferometer.

The last point to be considered is optics. Not all optical components need to be understood in great detail to characterize the ECDL, though some shall be essential, i.e. a lense as well as the diffraction grating on a mirror are an integral part of the ECDL.

The set goal should be to **fully characterize the ECDL**, which by necessity shall include the characterization of other parts to the setup of the experimental set up to EIT. This means, we want to:

- compare emission spectrum of ECDL with theoretical prediction of semiconductor physics:
  - How does the population inversion take place?
  - What is our semi conductor made of (i.e. GaAs)?
  - Is a characterization of the semi-conductor possible ($I$–$U$)?
  - What instruments do we have to measure the spectrum?
  - What is the Free spectral range of the ECDL (Fabry-Pérot modes)?
  - Temperature dependance of emitted spectrum?
  - Can we determine the diffraction index $n$ of the depletion region (optical fiber)

As concrete next steps, we need to find out about material compositions and the dimensions of the diode to then understand the models that describe the emission spectrum to make numerical predictions.

### 1.1.1 Dominic: Literature collection

The handbook is a user manual of diode laser DL pro(**diode_manual?**).

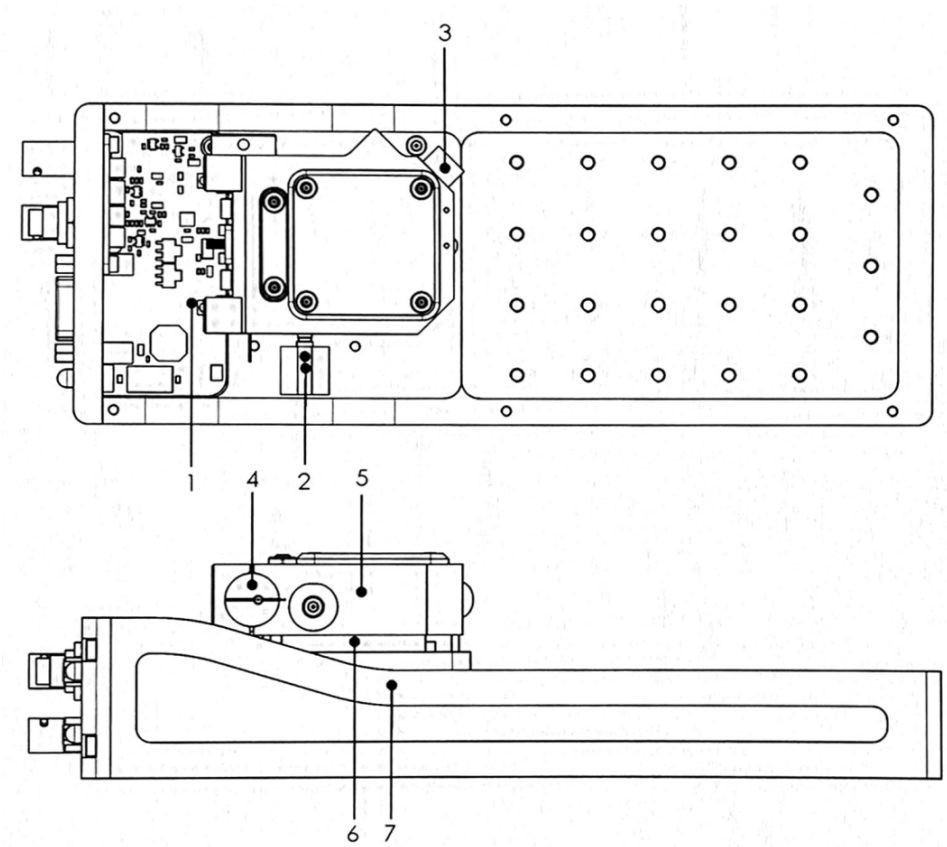


Figure 1: Laser setup by manufacturer (**diode_manual?**)

**Tasks:**

- getting an understanding of the input– and output parameters **Blackbox of the ECDL**

**Input:**

- high speed frequency modulation port (-> frequency looking)
- current $I$
- temperature $T$
- Littrow grating angle $\alpha_g$
- grating constant $d$

**Output:**

- coherence length $> 100$m
- line width $< 1$MHz
- tuning to "several 10's of nm without realignment"
- tuning of 10's of GHz
- elliptical beam crosssecton (3:1)
  - "amorphic prism pair" can reshape the cross-section
- collimated beam
- power $< 500$mW

Preliminary notes

**1 Grating Stabilized Diode Laser Head DL pro**

- Littrow-Hänsch-type grating stabilized ECDL
  - explaining that the first diffraction order $m = 1$ is reflected back at the laser diode (1.1)

**2 Safety instructions and Warnings**

- laser source up to class 3b
- "Any plug in module should only be opened by trained personnel. Before exchanging and opening any module, the Diode LaserSystem DL pro must be switched off and disconnected from the mains supply."
- if doing anything out of the ordinary with the internal Laser setup switch off Scan control and disconnect piezo supply
- adjustments should be made by trained personal
- "When making adjustments be sure to wear a high-impedance grounding strip around the wrist at all times."
- avoid high and uncontrolled optical feedback, this may damage/destroy the laser diode
- turn off laser diode before connecting cables and verify the according parameters, to prevent damaging laser diode
- the cover should not be removed under operation, due to stray light
- the laser diode is extremely sensitive to electrostatic discharge

**2.2 Laser beam**

- emits up to $< 500$mW power

**4.3 Power Up and Check of the Production and Quality Control Data Sheet:**

- instructions for turning the laser diode on

**4.5 ContinuoUs Operation of the Diode Laser Head DL pro:**

- how to obtain a continuos and stable signal

Tuning of the Diode Laser

**4.6 Tuning the Diode Laser Head DL pro:**

- describes how to find frequencies
- question on single or multi mode operation
- mode hop free tuning of laser diode

**4.6.1 Manual Coarse Tuning of the Wavelength**

- by tuning the grating angle by a fine threaded screw (2 in Figure 2) the wavelength may be varied up to 100nm (no realignement of optical set up required)

$$\sin(\alpha_g) = \frac{m\lambda}{2d}$$

- half a turn on fine threaded screw -> $\sim$ 6nm
- maximum laser current $I_{max}(\lambda)$ is dependant on the parameter of the wavelength $\lambda$

**4.6.2 Single Mode and Coherence Control** factors that affect the ECDL mode frequency/wavelength

1) medium gain profile (of diode gain medium)
2) internal cavity i.e. diode length $l$
3) external resonator mode defined by $L$ (optical distance of rear internal cavity mirror to the grating)
4) grating profile

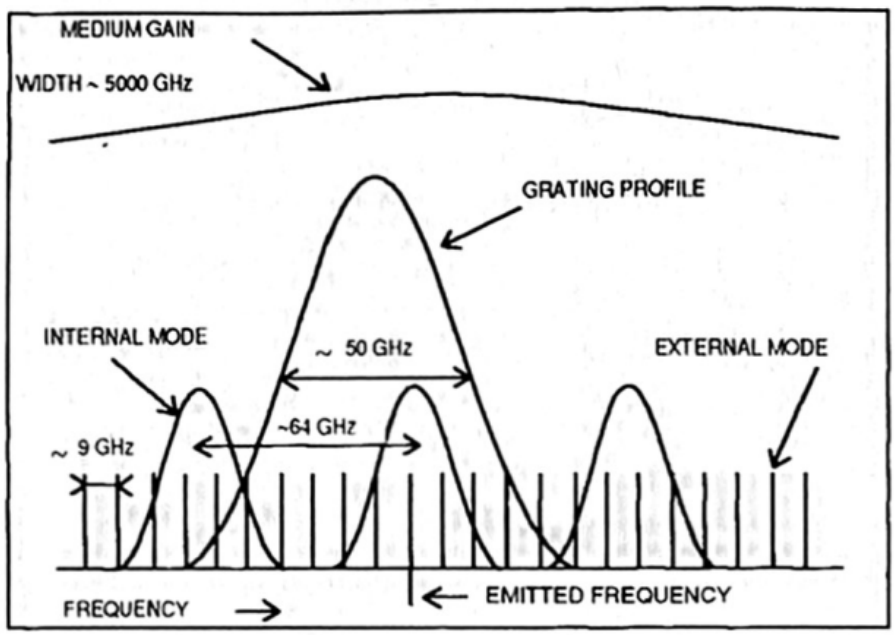


Figure 2: Here the effects of the various components and physical parameters have on the line width (**diode_manual?**). The

- with varying laser diode current $I_D$ the profiles 2) & 3) move with different speeds!
- refraction index $n$

### 1.1.2 Awais: Literature collection

**Test and Characterization of Laser Diodes: Determination of Principal Parameters By Kamran S. Mobarhan, Ph.D.** This hand book is around determining the principle parameters to characterize and optimize laser to its efficient point. Notes:https://web.goodnotes.com/s/RIr0x17NwiZTeFIQFdGrsT