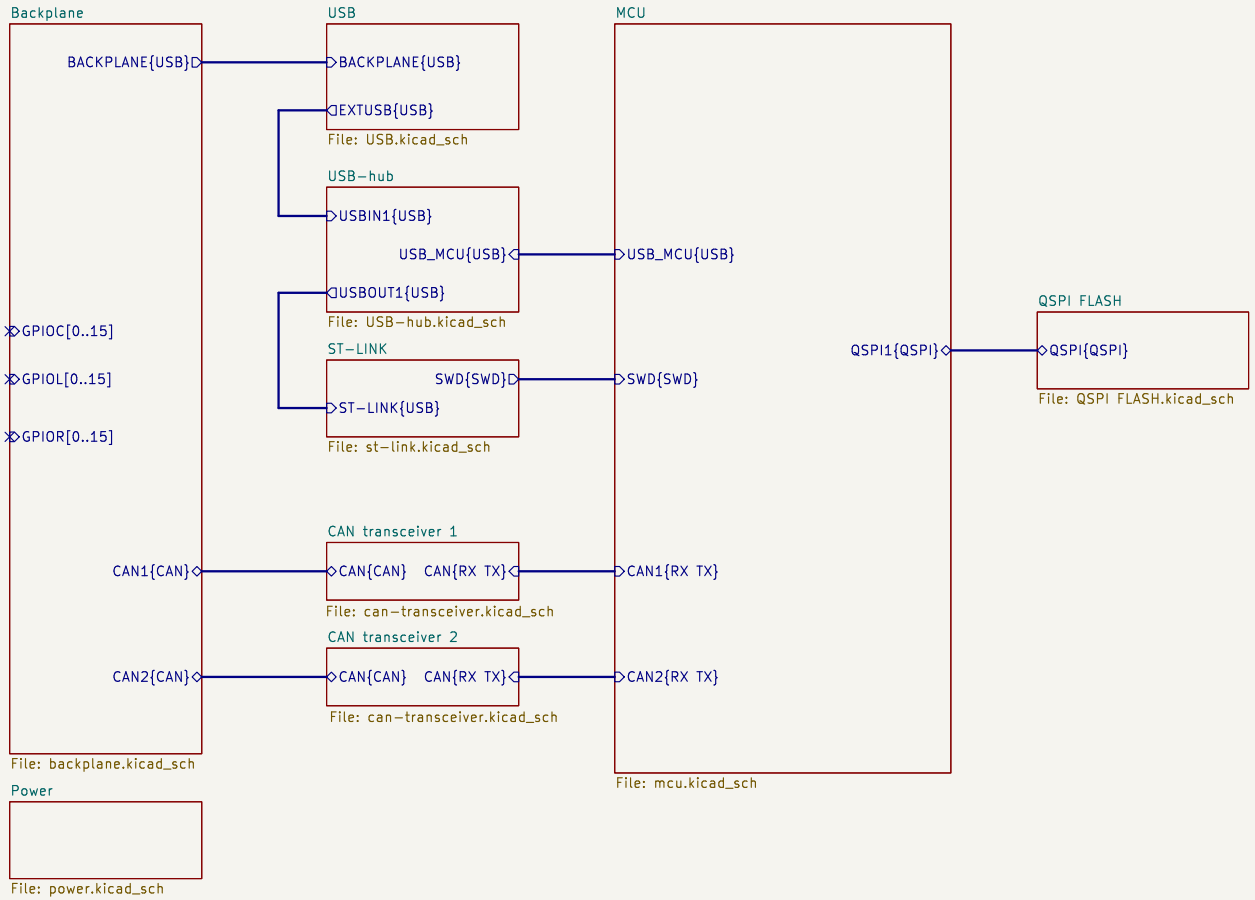

Project author: <author>
Base project authors: Dominik Pluta, Artem Horiunov
KoNaR

Sheet: /
File: base-module.kicad_sch

Title: ModuCard base module

Size: A4	Date: 2024-12-23	**Rev: 1.0.0**
KiCad E.D.A. 8.0.8		Id: 1/10

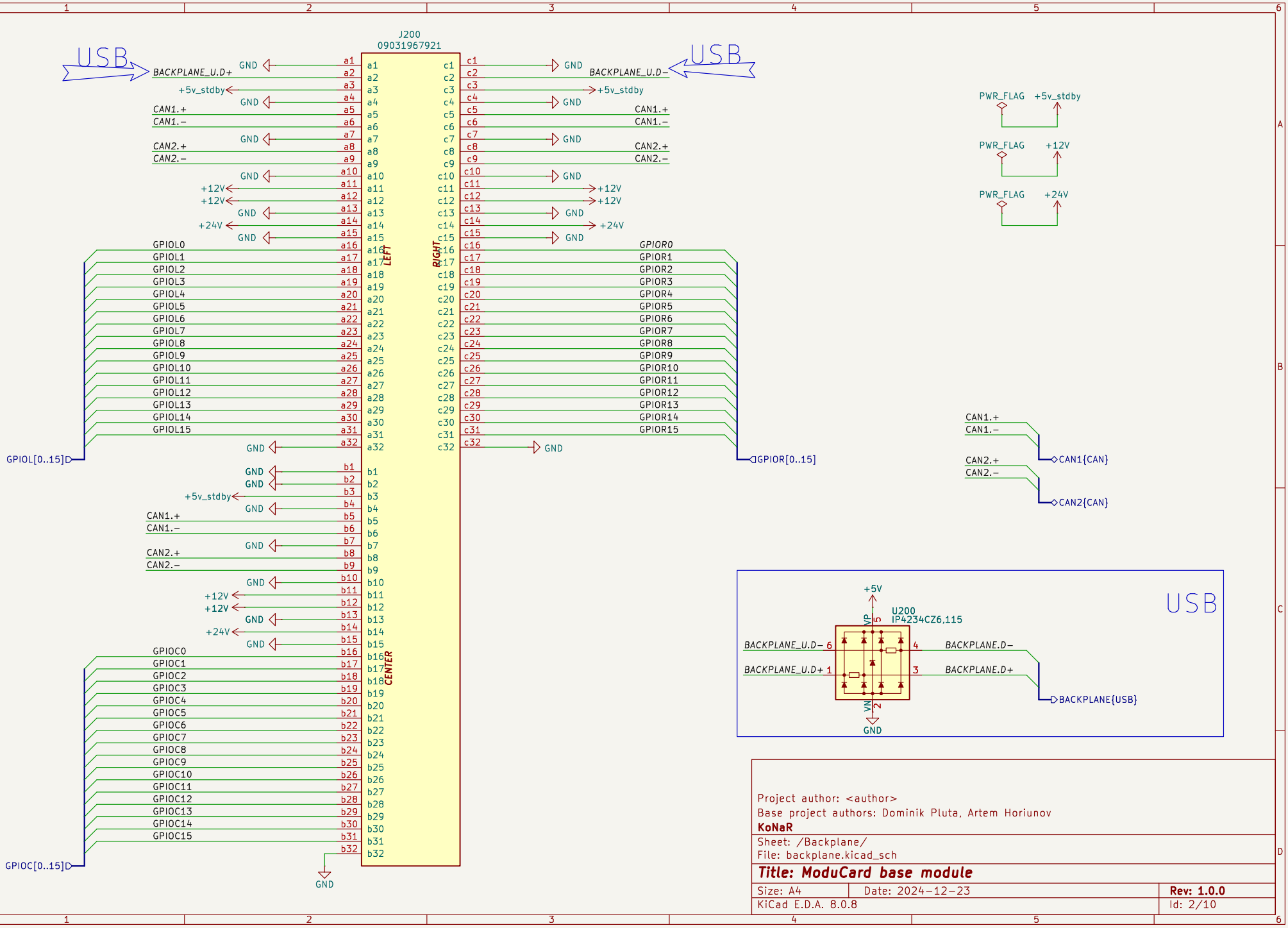

Project author: <author>
Base project authors: Dominik Pluta, Artem Horiunov
KoNaR

Sheet: /Backplane/
File: backplane.kicad_sch

Title: ModuCard base module

Size: A4	Date: 2024-12-23	**Rev: 1.0.0**
KiCad E.D.A. 8.0.8		Id: 2/10

5V DC/DC CONVERTER

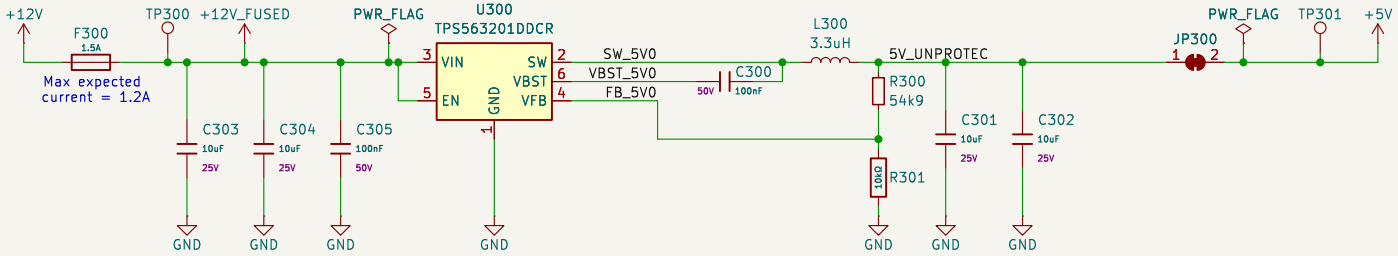

3V3 DC/DC CONVERTER

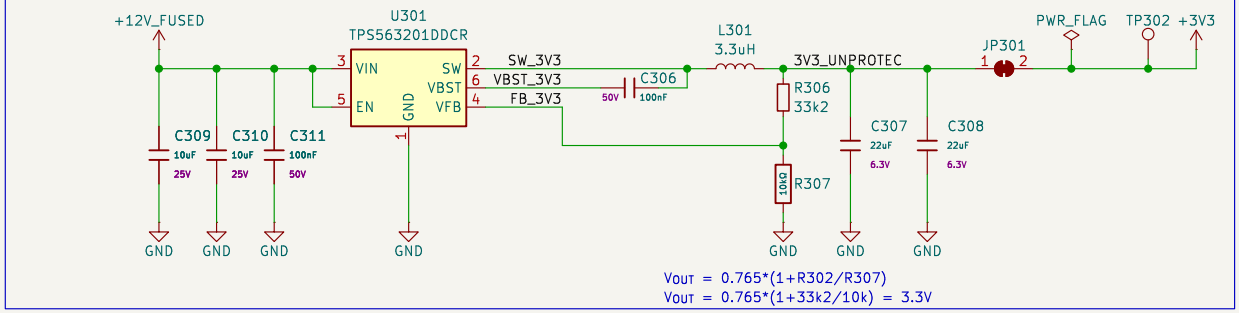

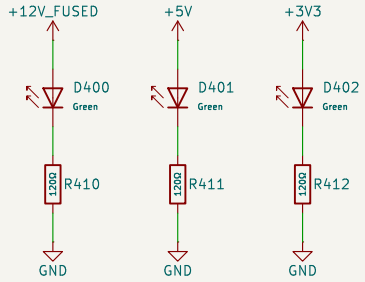

Project author: <author>
Base project authors: Dominik Pluta, Artem Horiunov
KoNaR

Sheet: /Power/
File: power.kicad_sch

Title: ModuCard base module

Size: A4	Date: 2024-12-23	**Rev: 1.0.0**
KiCad E.D.A. 8.0.8		Id: 3/10

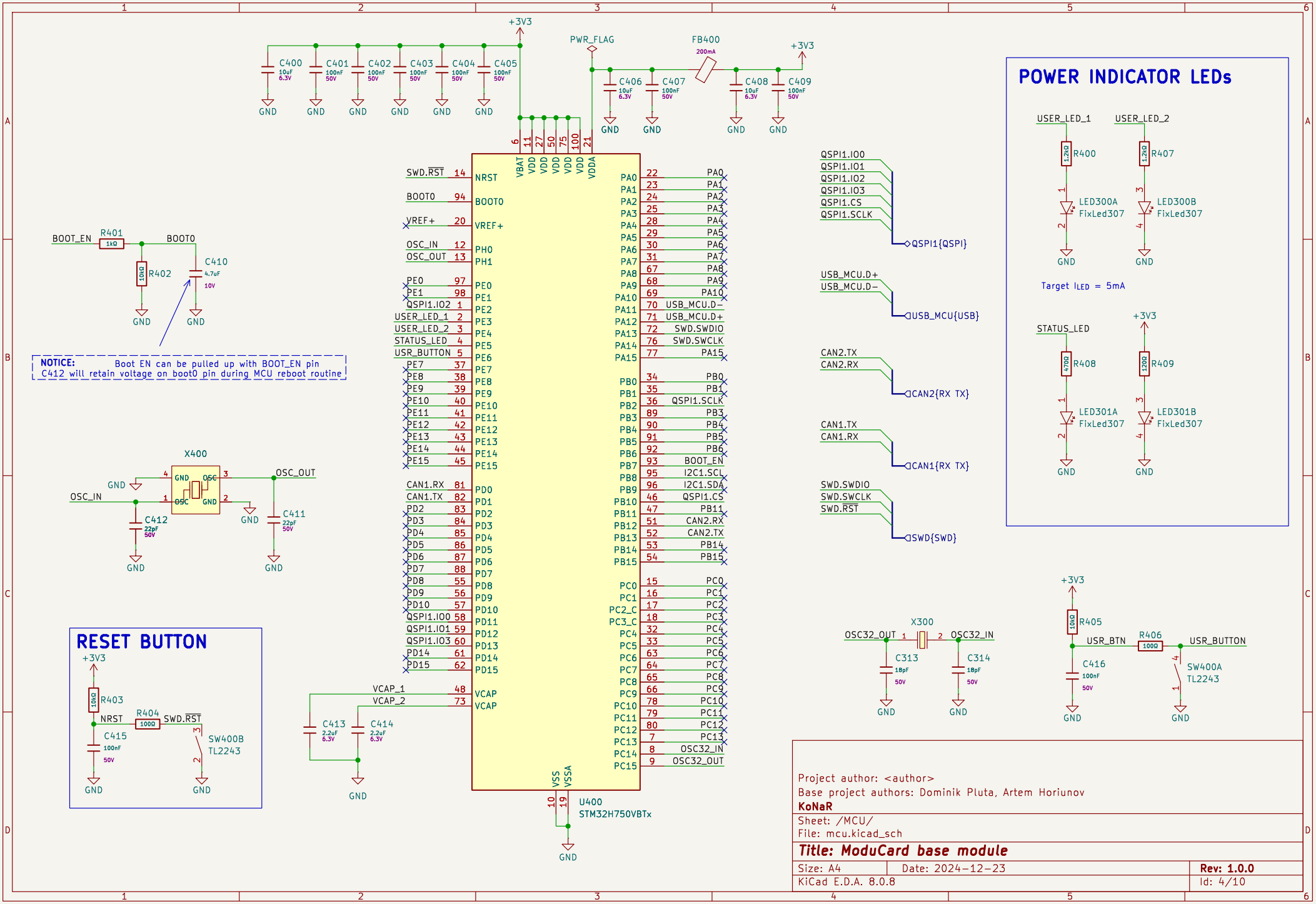

POWER INDICATOR LEDs
USER_LED_1
USER_LED_2
R400
R407
LED300A
FixLed307
LED300B
FixLed307
Target ILED = 5mA
STATUS_LED
R408
R409
LED301A
FixLed307
LED301B
FixLed307
+3V3
GND
PWR_FLAG
FB400
200mA
C400
C401
C402
C403
C404
C405
C406
C407
C408
C409
VBAT
VDD
VDDA
NRST
BOOT0
VREF+
PH0
PH1
PE0
PE1
PE2
PE3
PE4
PE5
PE6
PE7
PE8
PE9
PE10
PE11
PE12
PE13
PE14
PE15
PD0
PD1
PD2
PD3
PD4
PD5
PD6
PD7
PD8
PD9
PD10
PD11
PD12
PD13
PD14
PD15
VCAP
VCAP_1
VCAP_2
PA0
PA1
PA2
PA3
PA4
PA5
PA6
PA7
PA8
PA9
PA10
PA11
PA12
PA13
PA14
PA15
PB0
PB1
PB2
PB3
PB4
PB5
PB6
PB7
PB8
PB9
PB10
PB11
PB12
PB13
PB14
PB15
PC0
PC1
PC2_C
PC3_C
PC4
PC5
PC6
PC7
PC8
PC9
PC10
PC11
PC12
PC13
PC14
PC15
VSS
VSSA
U400
STM32H750VBTx
SWD.RST
BOOT0
VREF+
OSC_IN
OSC_OUT
PE0
PE1
QSPI1.IO2
USER_LED_1
USER_LED_2
STATUS_LED
USR_BUTTON
PE7
PE8
PE9
PE10
PE11
PE12
PE13
PE14
PE15
CAN1.RX
CAN1.TX
PD2
PD3
PD4
PD5
PD6
PD7
PD8
PD9
PD10
QSPI1.IO0
QSPI1.IO1
QSPI1.IO3
PD14
PD15
VCAP_1
VCAP_2
PA0
PA1
PA2
PA3
PA4
PA5
PA6
PA7
PA8
PA9
PA10
USB_MCU.D-
USB_MCU.D+
SWD.SWDIO
SWD.SWCLK
PA15
PB0
PB1
QSPI1.SCLK
PB3
PB4
PB5
PB6
BOOT_EN
I2C1.SCL
I2C1.SDA
QSPI1.CS
PB11
CAN2.RX
CAN2.TX
PB14
PB15
PC0
PC1
PC2
PC3
PC4
PC5
PC6
PC7
PC8
PC9
PC10
PC11
PC12
PC13
OSC32_IN
OSC32_OUT
QSPI1.IO0
QSPI1.IO1
QSPI1.IO2
QSPI1.IO3
QSPI1.CS
QSPI1.SCLK
QSPI1{QSPI}
USB_MCU.D+
USB_MCU.D-
USB_MCU{USB}
CAN2.TX
CAN2.RX
CAN2{RX TX}
CAN1.TX
CAN1.RX
CAN1{RX TX}
SWD.SWDIO
SWD.SWCLK
SWD.RST
SWD{SWD}
BOOT_EN
R401
1kΩ
R402
10kΩ
C410
4.7uF
10V
NOTICE: Boot EN can be pulled up with BOOT_EN pin
C412 will retain voltage on boot0 pin during MCU reboot routine
X400
OSC_IN
OSC_OUT
C412
22pF
50V
C411
22pF
50V
RESET BUTTON
R403
10kΩ
NRST
R404
100Ω
SWD.RST
C415
100nF
50V
SW400B
TL2243
C413
2.2uF
6.3V
C414
2.2uF
6.3V
X300
OSC32_OUT
OSC32_IN
C313
18pF
50V
C314
18pF
50V
R405
10kΩ
USR_BTN
R406
100Ω
USR_BUTTON
C416
100nF
50V
SW400A
TL2243
Project author: <author>
Base project authors: Dominik Pluta, Artem Horiunov
KoNaR
Sheet: /MCU/
File: mcu.kicad_sch
Title: ModuCard base module
Size: A4
Date: 2024-12-23
Rev: 1.0.0
KiCad E.D.A. 8.0.8
Id: 4/10

CAN TRANSCEIVER

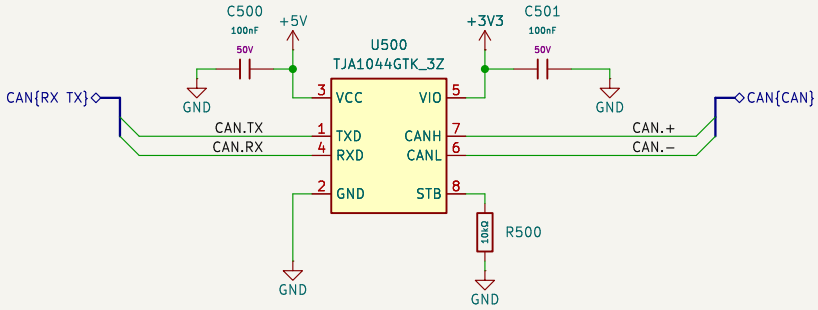

It's pretty empty here ...
here's meme to fill some space:

Project author: <author>
Base project authors: Dominik Pluta, Artem Horiunov
KoNaR

Sheet: /CAN transceiver 1/
File: can-transceiver.kicad_sch

Title: ModuCard base module

Size: A4	Date: 2024-12-23	**Rev: 1.0.0**
KiCad E.D.A. 8.0.8		Id: 5/10

CAN TRANSCEIVER

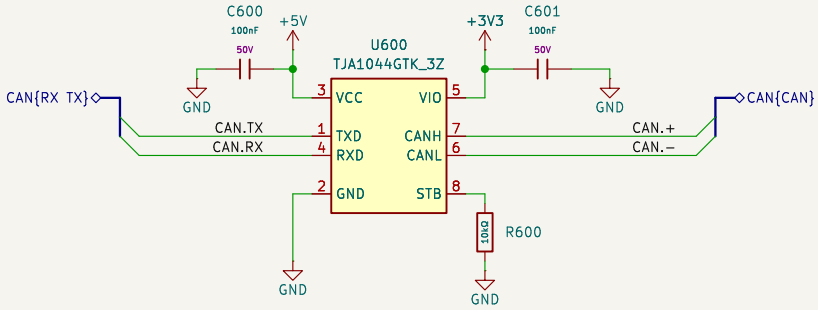

It's pretty empty here ...
here's meme to fill some space:

Project author: <author>
Base project authors: Dominik Pluta, Artem Horiunov
KoNaR

Sheet: /CAN transceiver 2/
File: can-transceiver.kicad_sch

Title: ModuCard base module

Size: A4	Date: 2024-12-23	**Rev: 1.0.0**
KiCad E.D.A. 8.0.8		Id: 6/10

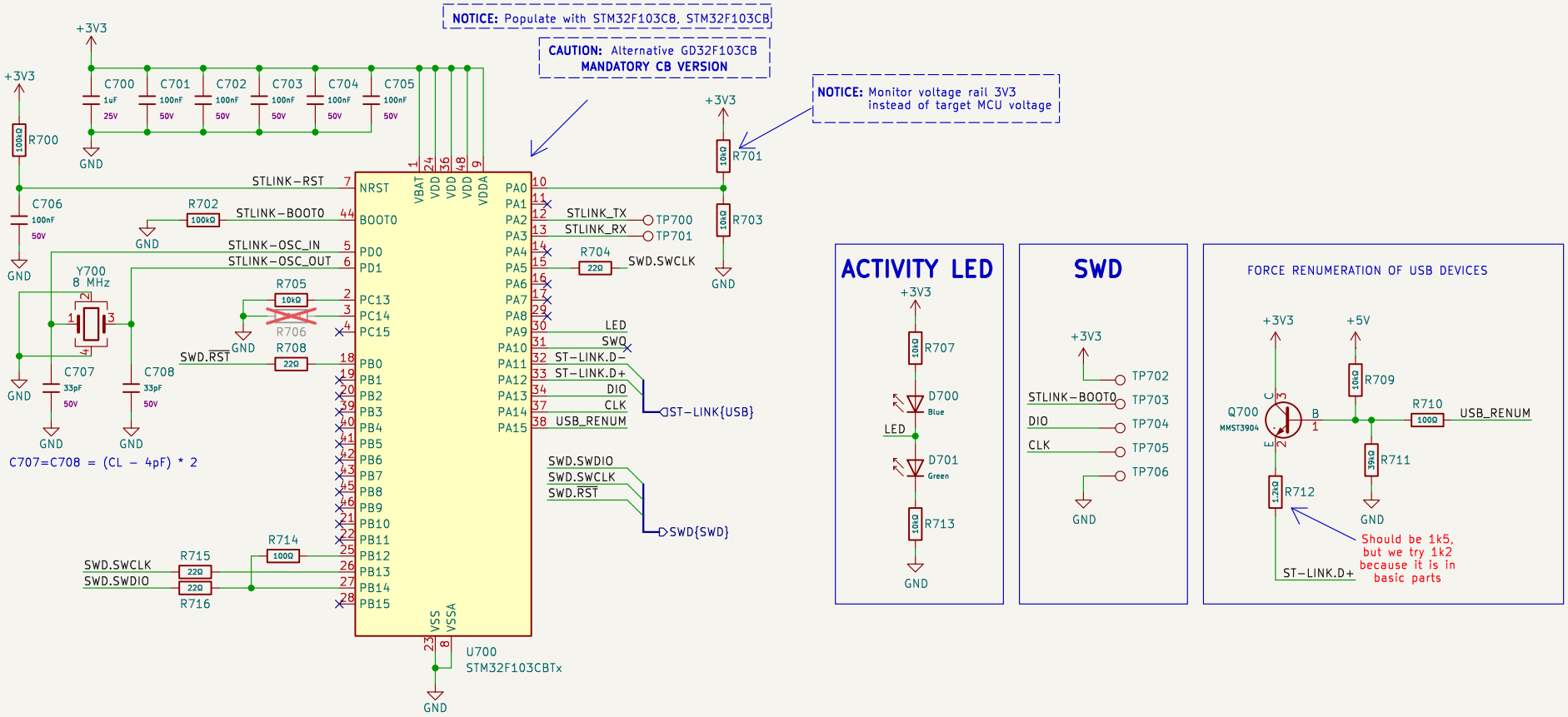

Credit to:
https://github.com/lbthomsen/st-link/tree/master
https://stm32world.com/wiki/DIY_STM32_Programmer_(ST-Link/V2-1)
for providing amazing reverse engeenering of ST-link

Project author: <author>
Base project authors: Dominik Pluta, Artem Horiunov
KoNaR

Sheet: /ST-LINK/
File: st-link.kicad_sch

Title: ModuCard base module

Size: A4	Date: 2024-12-23	**Rev: 1.0.0**
KiCad E.D.A. 8.0.8		Id: 7/10

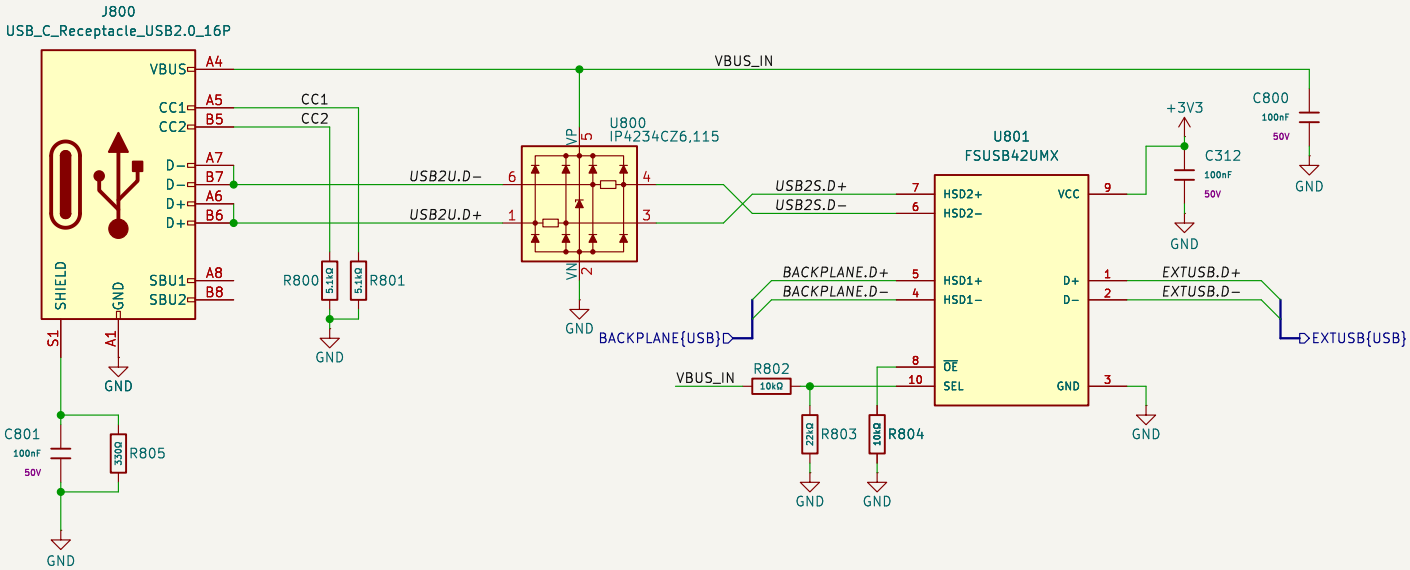

Project author: <author>
Base project authors: Dominik Pluta, Artem Horiunov
KoNaR

Sheet: /USB/
File: USB.kicad_sch

Title: ModuCard base module

Size: A4	Date: 2024-12-23	**Rev: 1.0.0**
KiCad E.D.A. 8.0.8		Id: 8/10

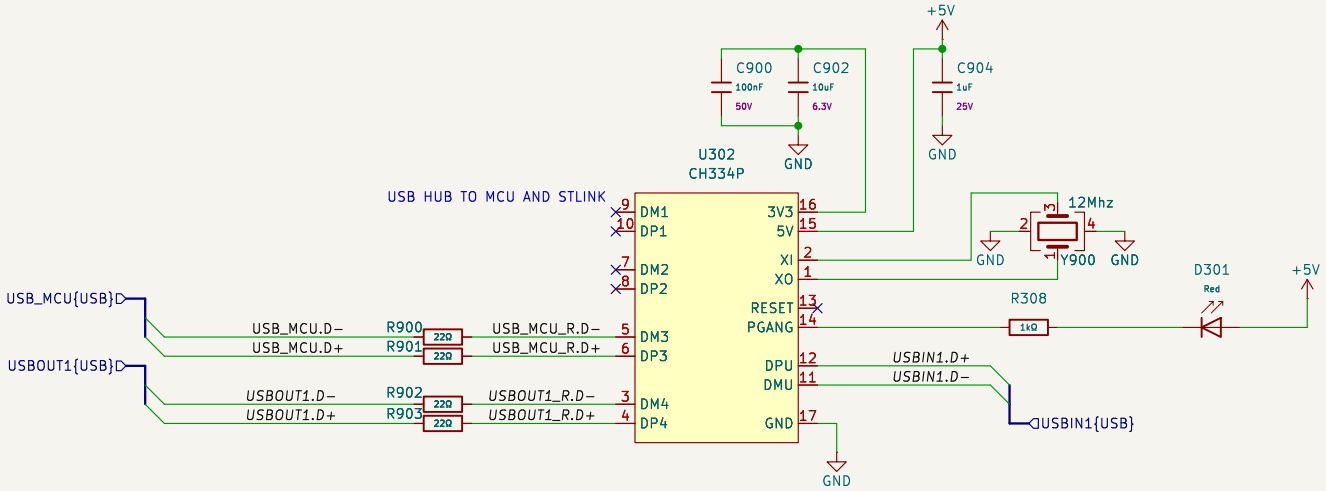

Base project authors: Dominik Pluta, Artem Horiunov

KoNaR

Sheet: /USB−hub/

File: USB−hub.kicad_sch

Title:

Size: A4	Date: 2024−12−23	**Rev: 1.0.0**
KiCad E.D.A. 8.0.8		Id: 9/10

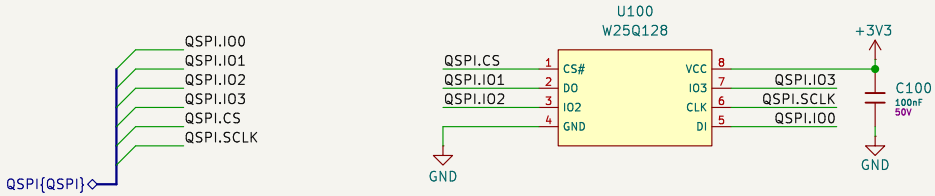

Base project authors: Dominik Pluta, Artem Horiunov

KoNaR

Sheet: /QSPI FLASH/
File: QSPI FLASH.kicad_sch

Title:

Size: A4	Date: 2024-12-23	**Rev: 1.0.0**
KiCad E.D.A. 8.0.8		Id: 10/10