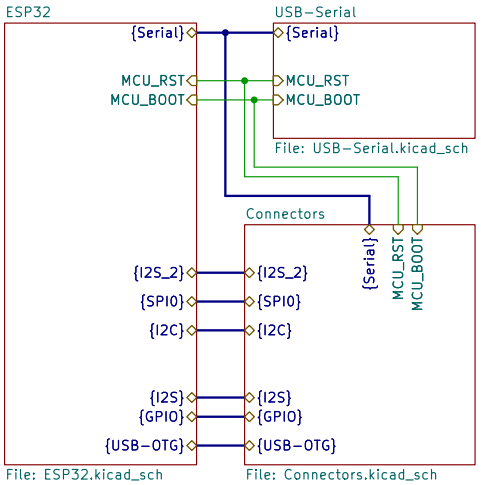

Future Proof Homes

Sheet: /
File: Core.kicad_sch

Title: Satellite 1 Core

Size: A4	Date: 2024-07-23	**Rev: rev2**
KiCad E.D.A. 9.0.0		Id: 1/4

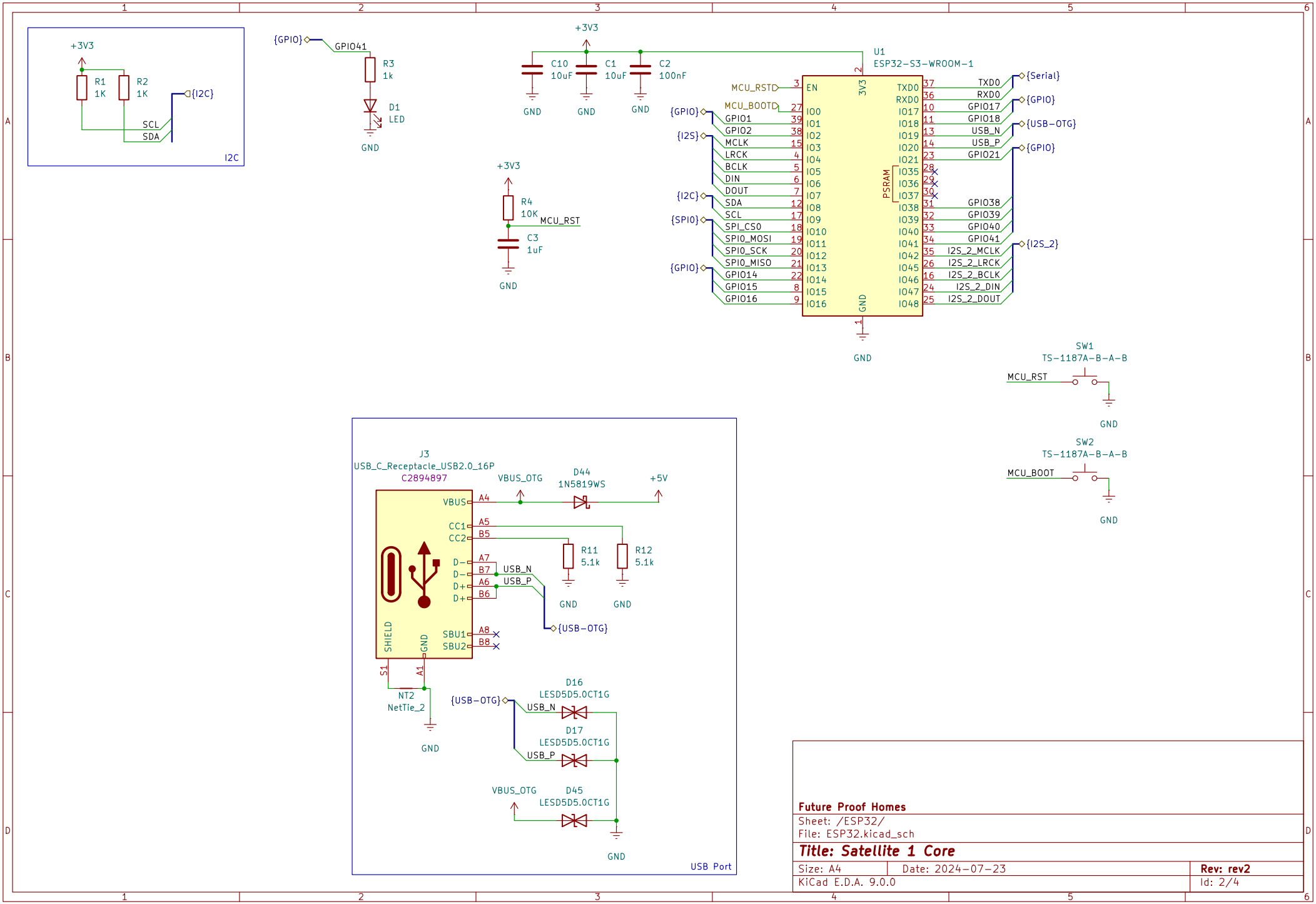

Future Proof Homes

Sheet: /ESP32/
File: ESP32.kicad_sch

Title: Satellite 1 Core

Size: A4	Date: 2024-07-23	Rev: rev2
KiCad E.D.A. 9.0.0		Id: 2/4

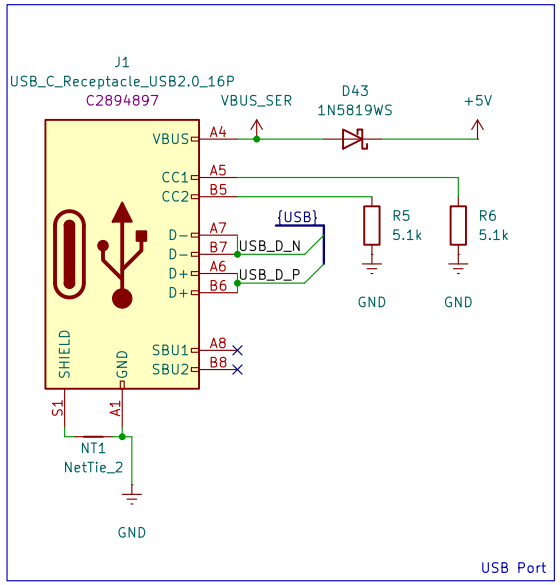

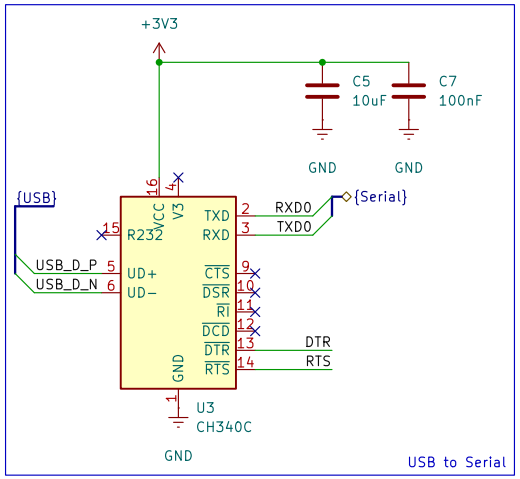

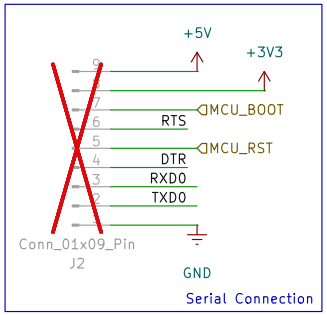

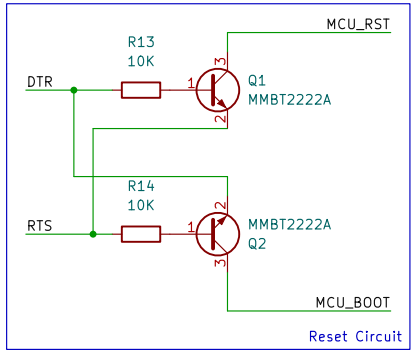

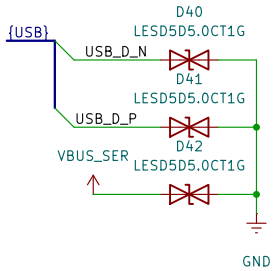

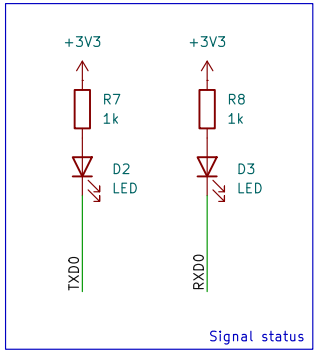

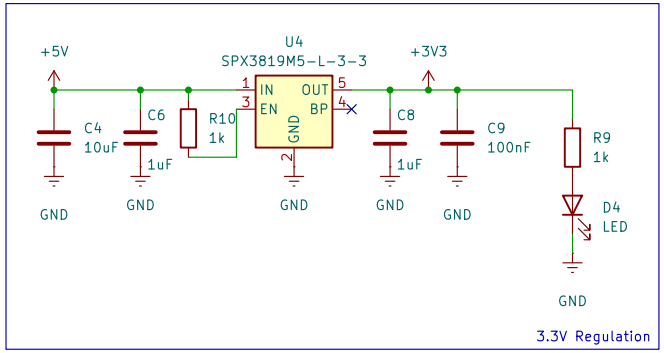

Future Proof Homes

Sheet: /USB−Serial/

File: USB−Serial.kicad_sch

Title: Satellite 1 Core

Size: A4	Date: 2024−07−23	**Rev: rev2**
KiCad E.D.A. 9.0.0		Id: 3/4

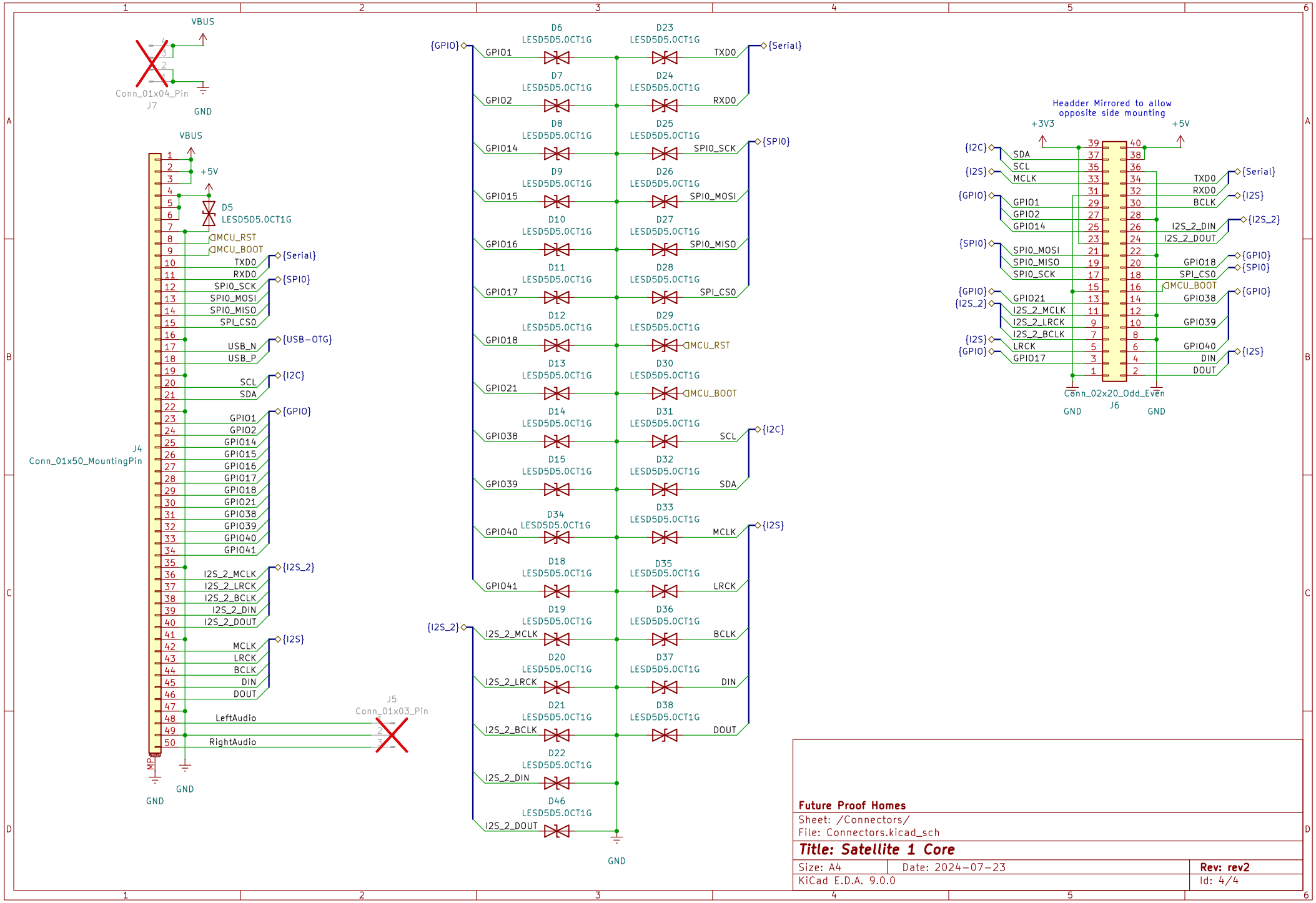

Future Proof Homes

Sheet: /Connectors/
File: Connectors.kicad_sch

Title: Satellite 1 Core

Size: A4	Date: 2024-07-23	Rev: rev2
KiCad E.D.A. 9.0.0		Id: 4/4