# FutureProofHomes – Satellite1 HAT rev4.1

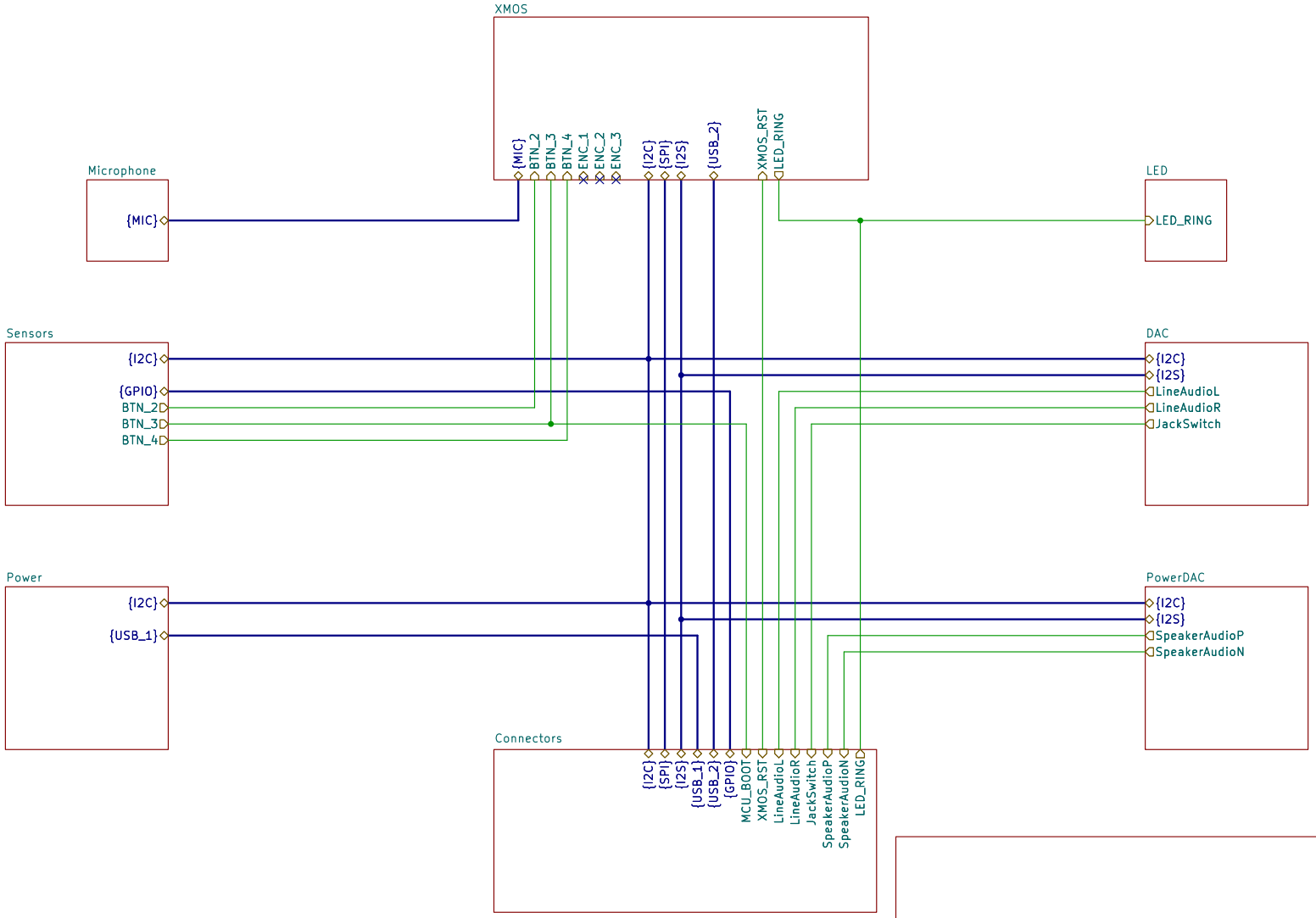


**FutureProofHomes**

Sheet: /

File: sat1-hat.kicad_sch

***Title: Satellite1 HAT***

| | | |
|---|---|---|
| Size: A4 | Date: 2024-12-06 | **Rev: rev4.1** |
| KiCad E.D.A. 9.0.0 | | Id: 1/9 |

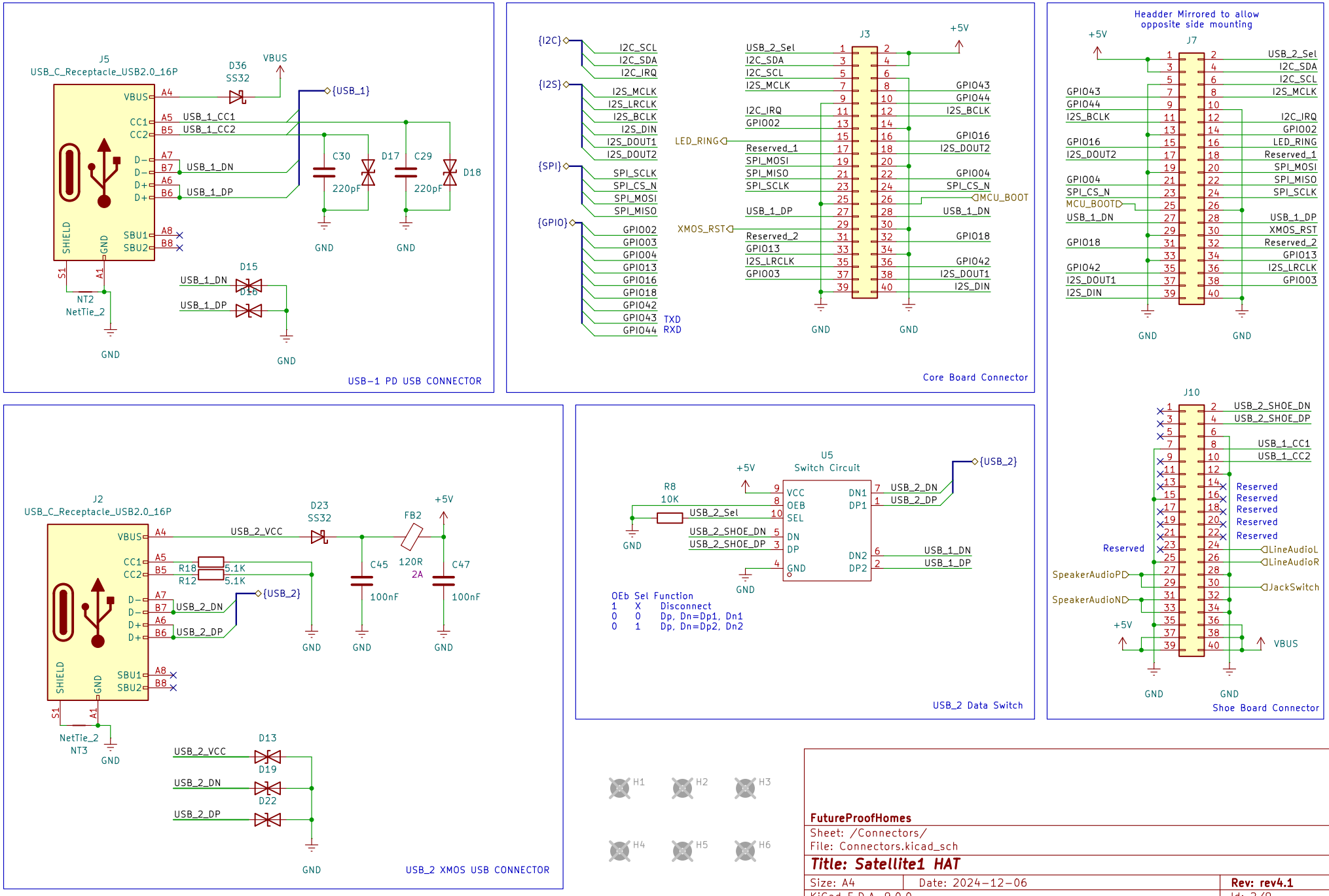
J5
USB_C_Receptacle_USB2.0_16P
D36
SS32
VBUS
{USB_1}
USB_1_CC1
USB_1_CC2
USB_1_DN
USB_1_DP
C30
220pF
D17
C29
220pF
D18
GND
D15
D16
NT2
NetTie_2
USB-1 PD USB CONNECTOR
{I2C}
I2C_SCL
I2C_SDA
I2C_IRQ
{I2S}
I2S_MCLK
I2S_LRCLK
I2S_BCLK
I2S_DIN
I2S_DOUT1
I2S_DOUT2
{SPI}
SPI_SCLK
SPI_CS_N
SPI_MOSI
SPI_MISO
{GPIO}
GPIO002
GPIO003
GPIO004
GPIO013
GPIO016
GPIO018
GPIO042
GPIO043
GPIO044
TXD
RXD
J3
+5V
LED_RING
XMOS_RST
MCU_BOOT
Core Board Connector
Headder Mirrored to allow
opposite side mounting
J7
J2
USB_C_Receptacle_USB2.0_16P
USB_2_VCC
D23
SS32
FB2
120R
2A
R18
5.1K
R12
5.1K
C45
100nF
C47
100nF
{USB_2}
USB_2_DN
USB_2_DP
NetTie_2
NT3
D13
D19
D22
USB_2 XMOS USB CONNECTOR
U5
Switch Circuit
R8
10K
USB_2_Sel
USB_2_SHOE_DN
USB_2_SHOE_DP
VCC
OEB
SEL
DN
DP
GND
DN1
DP1
DN2
DP2
OEb Sel Function
1 X Disconnect
0 0 Dp, Dn=Dp1, Dn1
0 1 Dp, Dn=Dp2, Dn2
USB_2 Data Switch
J10
Reserved
LineAudioL
LineAudioR
JackSwitch
SpeakerAudioP
SpeakerAudioN
Shoe Board Connector
H1
H2
H3
H4
H5
H6
FutureProofHomes
Sheet: /Connectors/
File: Connectors.kicad_sch
Title: Satellite1 HAT
Size: A4
Date: 2024-12-06
Rev: rev4.1
KiCad E.D.A. 9.0.0
Id: 2/9

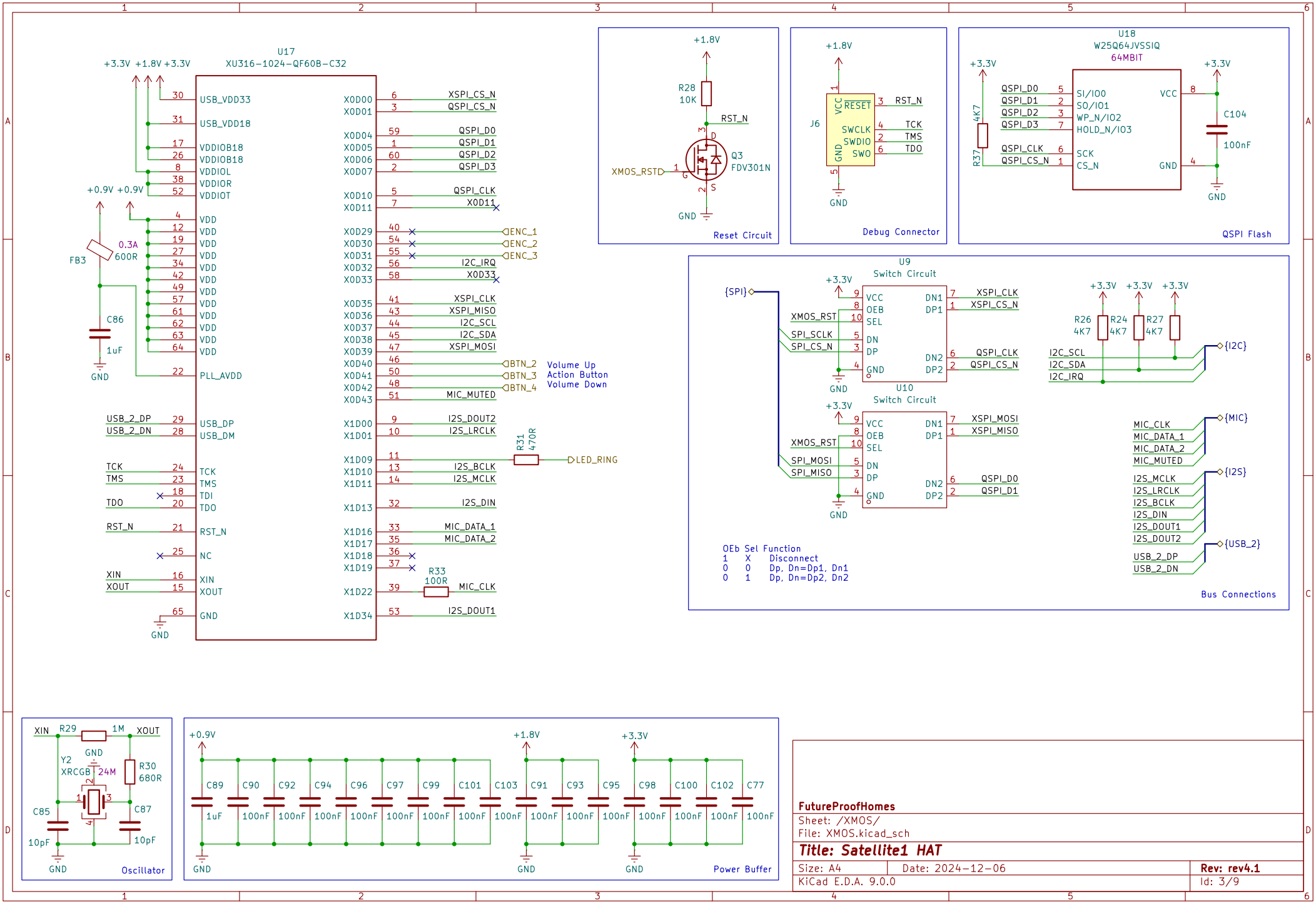


**FutureProofHomes**

Sheet: /XMOS/
File: XMOS.kicad_sch

**Title: Satellite1 HAT**

| | | |
|---|---|---|
| Size: A4 | Date: 2024-12-06 | Rev: rev4.1 |
| KiCad E.D.A. 9.0.0 | | Id: 3/9 |

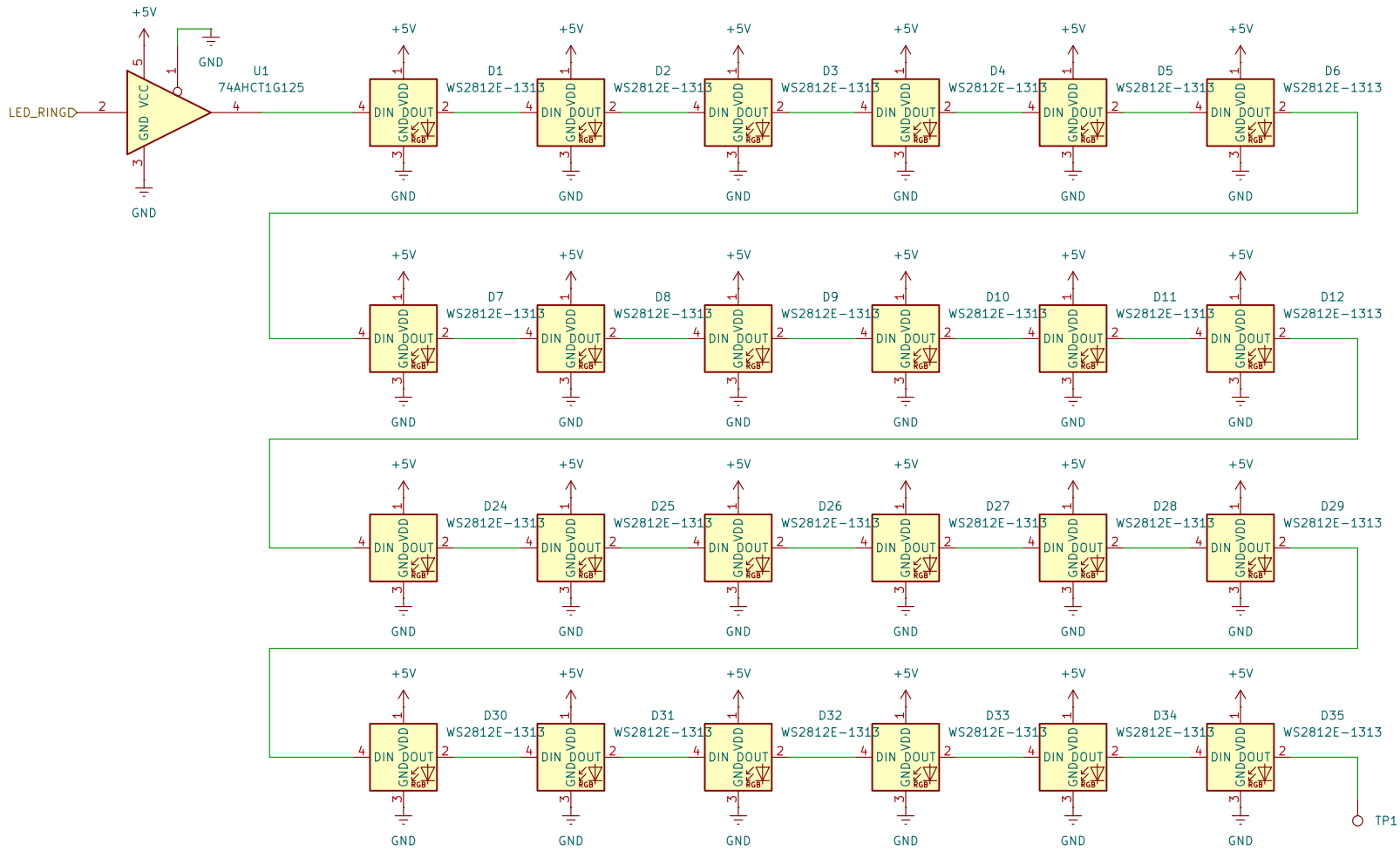


**FutureProofHomes**

Sheet: /LED/

File: LED.kicad_sch

***Title: Satellite1 HAT***

| | | |
|---|---|---|
| Size: A4 | Date: 2024-12-06 | **Rev: rev4.1** |
| KiCad E.D.A. 9.0.0 | | Id: 4/9 |

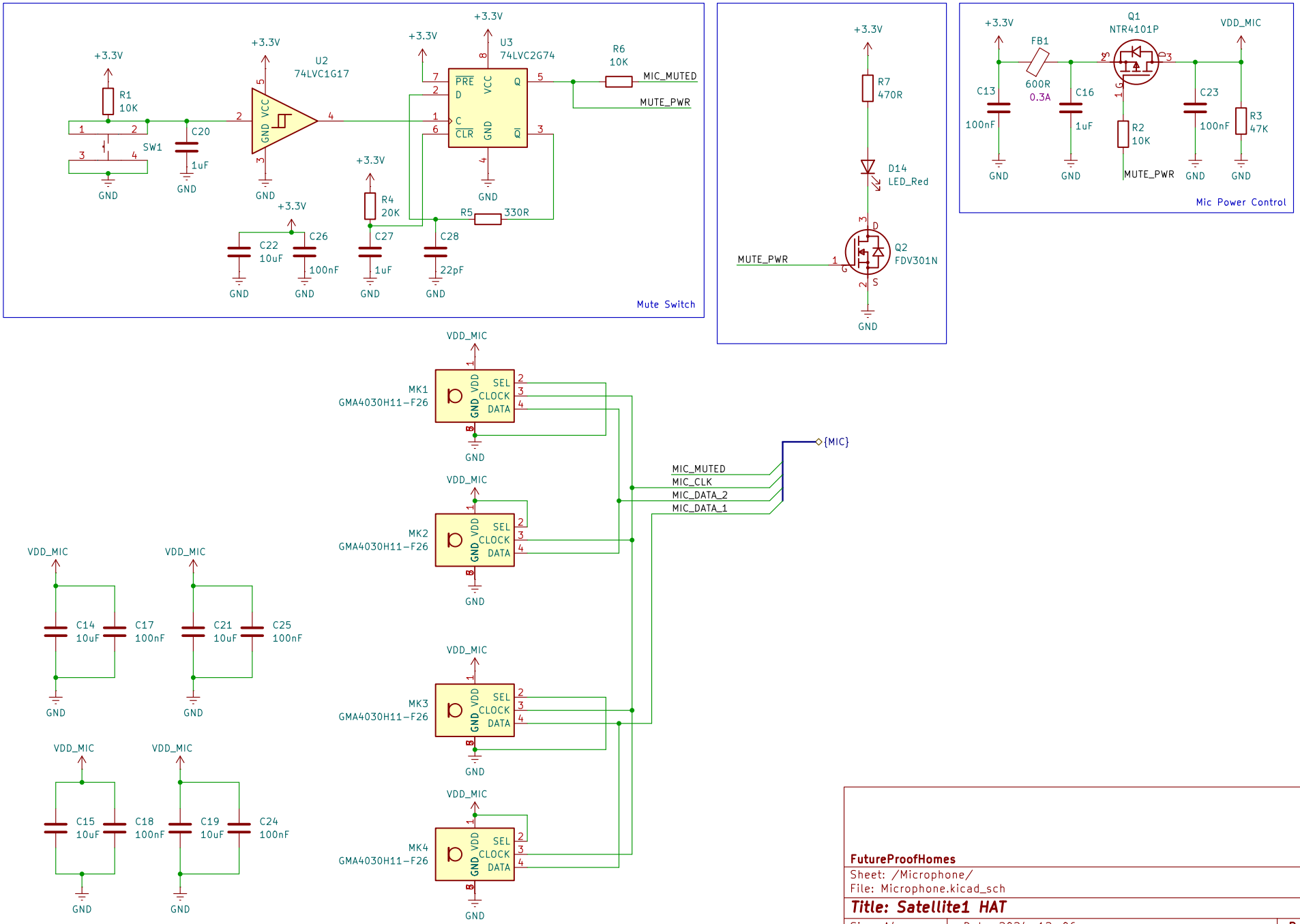


**FutureProofHomes**

Sheet: /Microphone/

File: Microphone.kicad_sch

***Title: Satellite1 HAT***

| | | |
|---|---|---|
| Size: A4 | Date: 2024-12-06 | **Rev: rev4.1** |
| KiCad E.D.A. 9.0.0 | | Id: 5/9 |

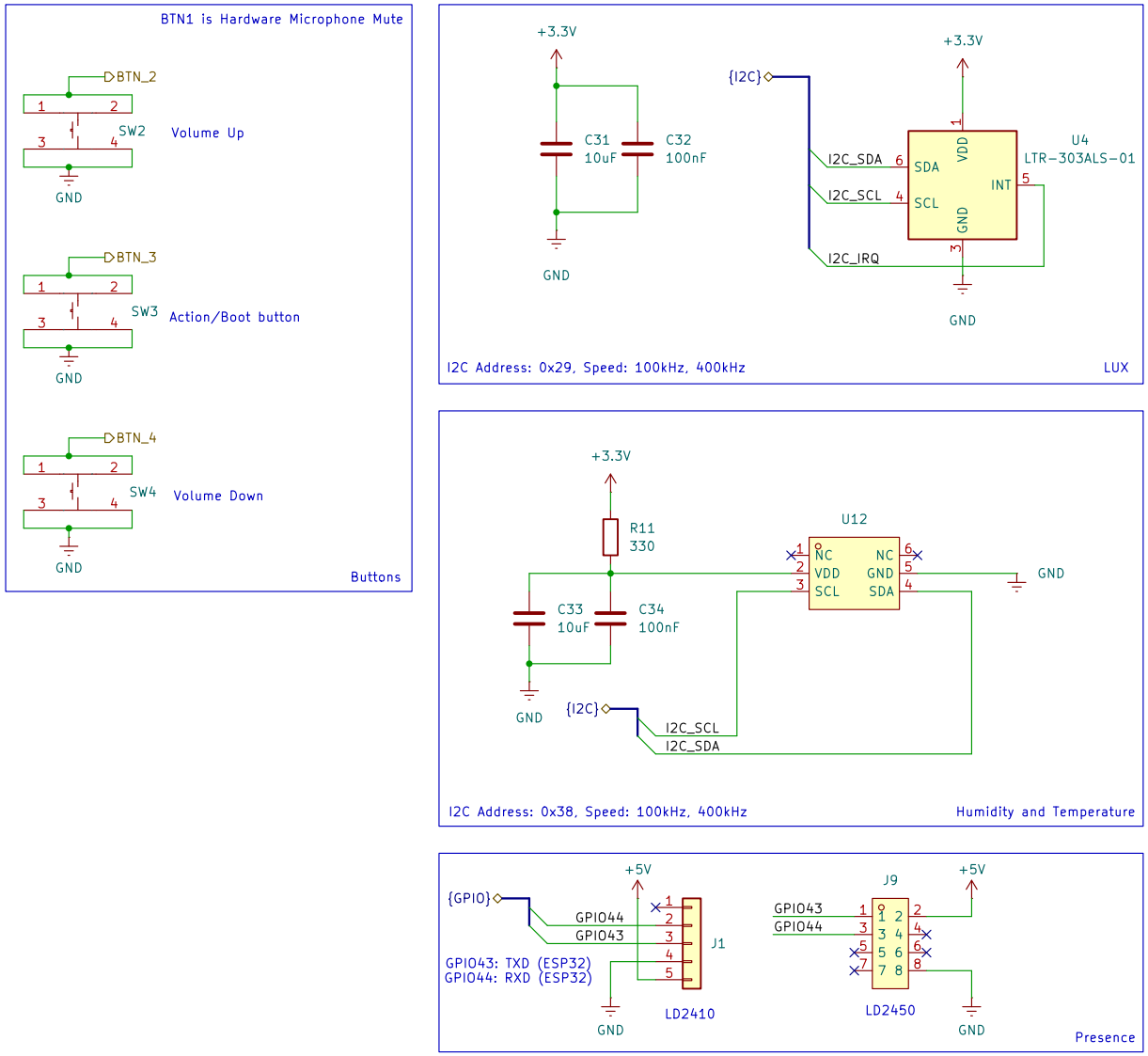


**FutureProofHomes**

Sheet: /Sensors/

File: Sensors.kicad_sch

***Title: Satellite1 HAT***

| | | |
|---|---|---|
| Size: A4 | Date: 2024-12-06 | **Rev: rev4.1** |
| KiCad E.D.A. 9.0.0 | | Id: 6/9 |

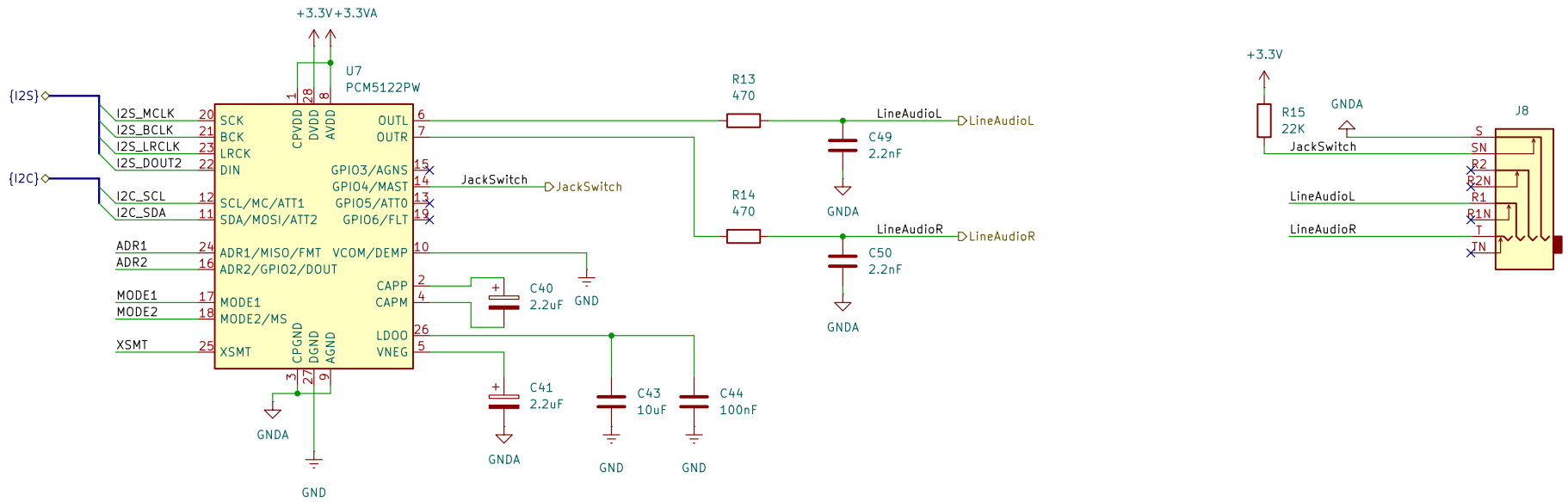


I2C Address: 0x4D, Speed: 100kHz, 400kHz

| Address: | Mode control selection pin: | | Soft mute control: |
|---|---|---|---|
| ADR1 = Low, ADR2 = Low: 0x4C<br>ADR1 = High, ADR2 = Low: 0x4D<br>ADR1 = Low, ADR2 = High: 0x4E<br>ADR1 = High, ADR2 = High: 0x4F | MODE1 = Low, MODE2 = Low:<br>MODE1 = Low, MODE2 = High:<br>MODE1 = High: | Hardwired mode<br>I2C mode<br>SPI mode | Soft mute (Low)<br>soft un-mute (High) |

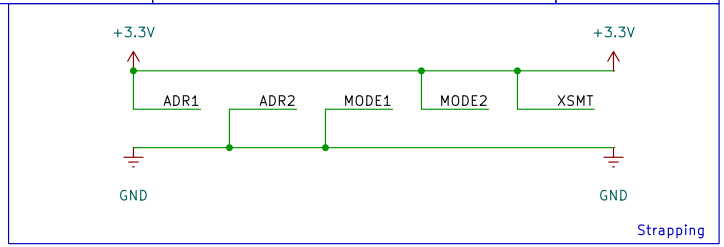


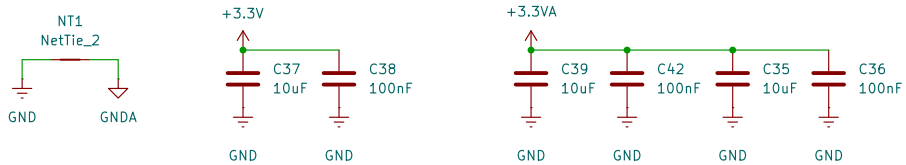


**FutureProofHomes**

Sheet: /DAC/
File: DAC.kicad_sch

**Title: Satellite1 HAT**

| Size: A4 | Date: 2024-12-06 | **Rev: rev4.1** |
|---|---|---|
| KiCad E.D.A. 9.0.0 | | Id: 8/9 |

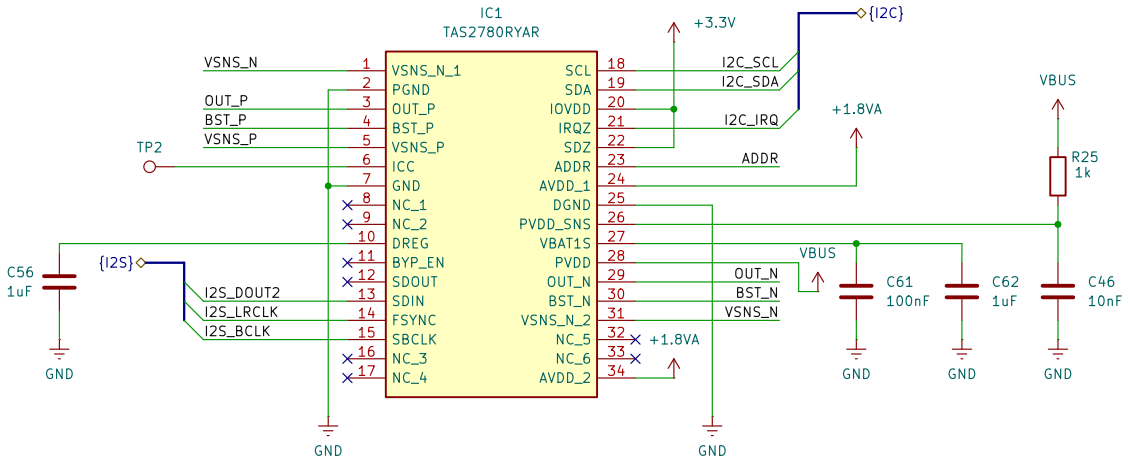


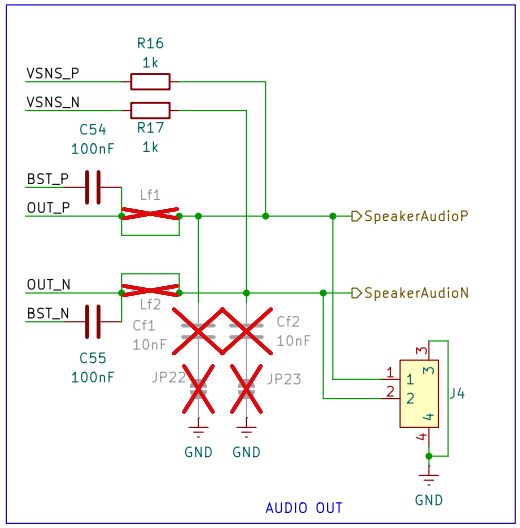


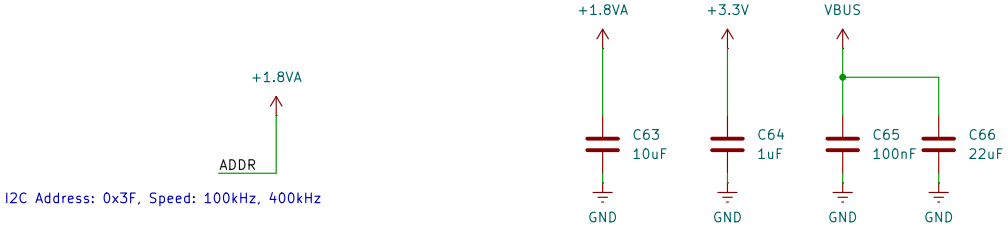


**FutureProofHomes**

Sheet: /PowerDAC/
File: PowerDAC.kicad_sch

**Title: Satellite1 HAT**

| | | |
|---|---|---|
| Size: A4 | Date: 2024-12-06 | **Rev: rev4.1** |
| KiCad E.D.A. 9.0.0 | | Id: 9/9 |

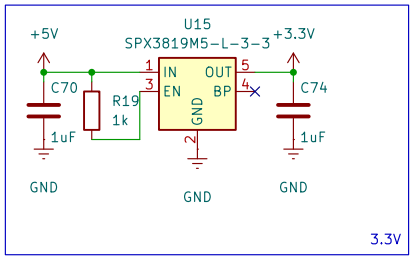


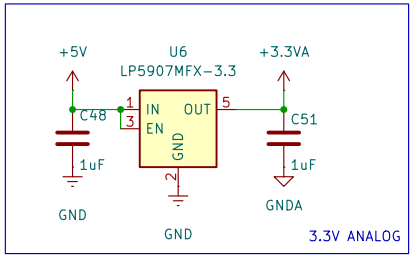


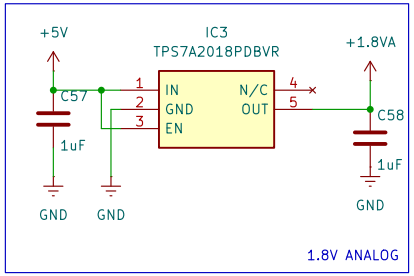


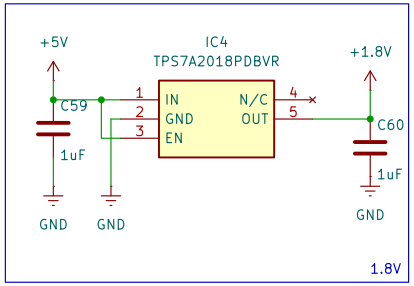


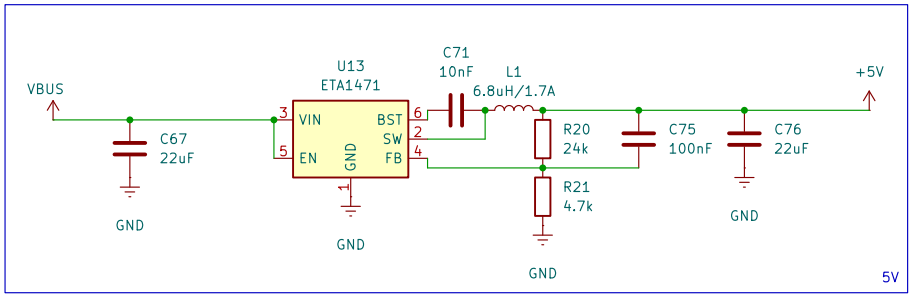


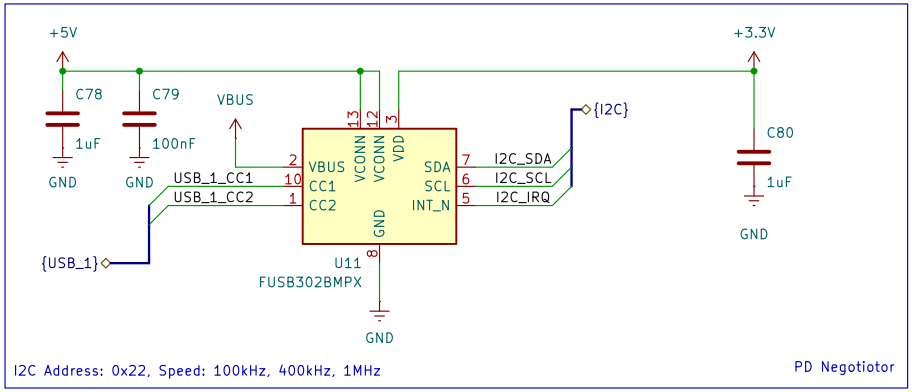


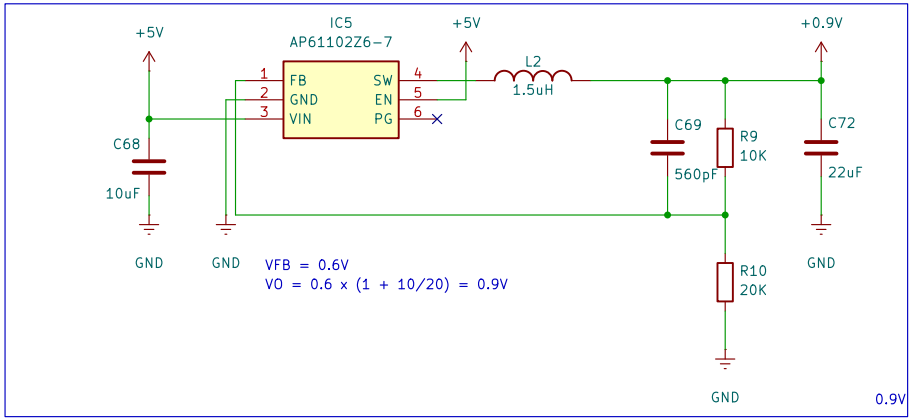


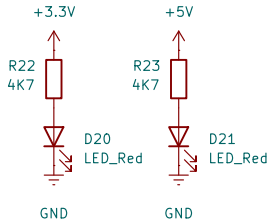


**FutureProofHomes**

Sheet: /Power/
File: Power.kicad_sch

**Title: Satellite1 HAT**

| | | |
|---|---|---|
| Size: A4 | Date: 2024-12-06 | **Rev: rev4.1** |
| KiCad E.D.A. 9.0.0 | | Id: 10/9 |