FutureProofHomes – Satellite1 HAT rev5

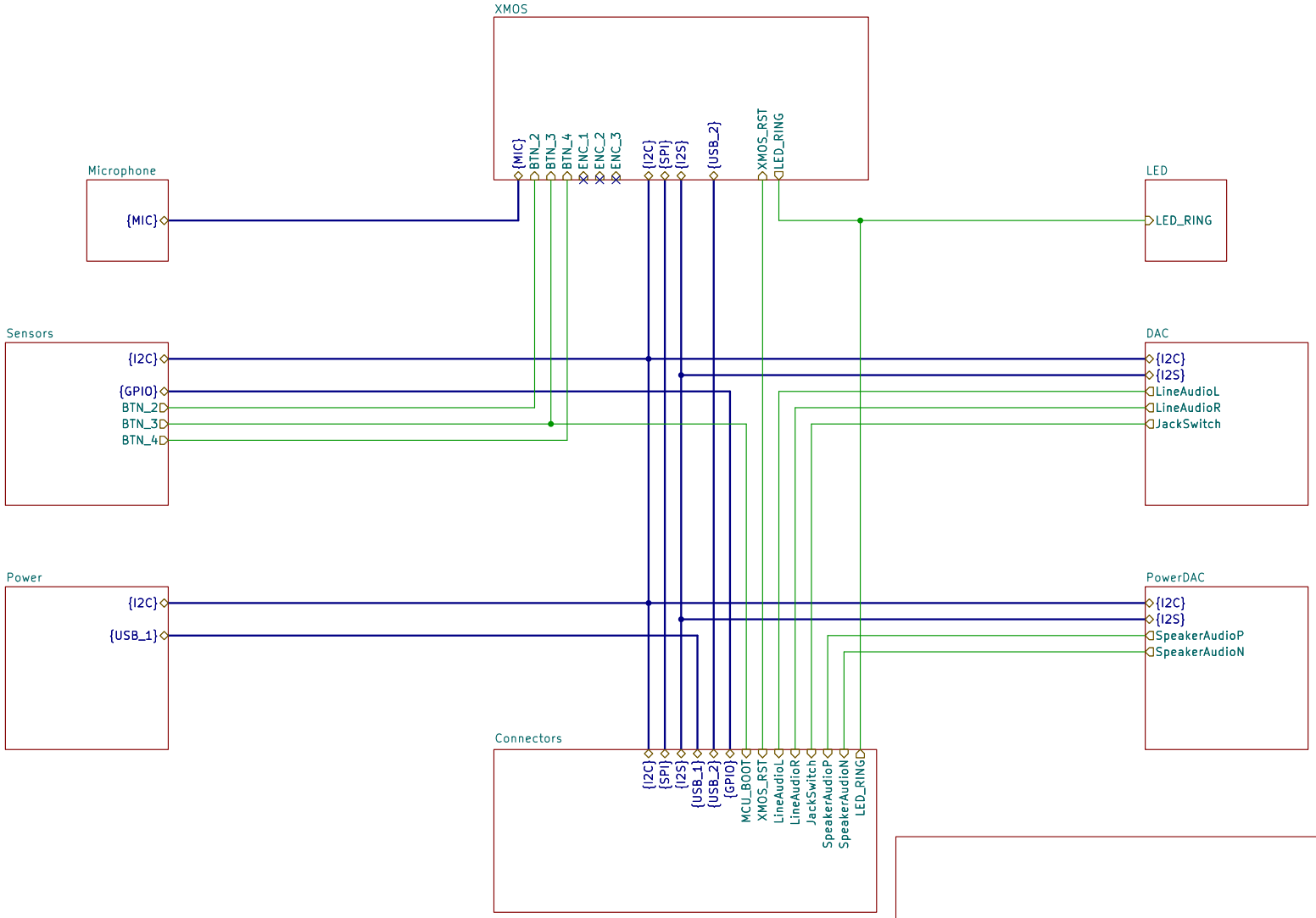

FutureProofHomes

Sheet: /

File: sat1-hat.kicad_sch

Title: Satellite1 HAT

Size: A4	Date: 2024-12.25	**Rev: rev5**
KiCad E.D.A. 9.0.0		Id: 1/9

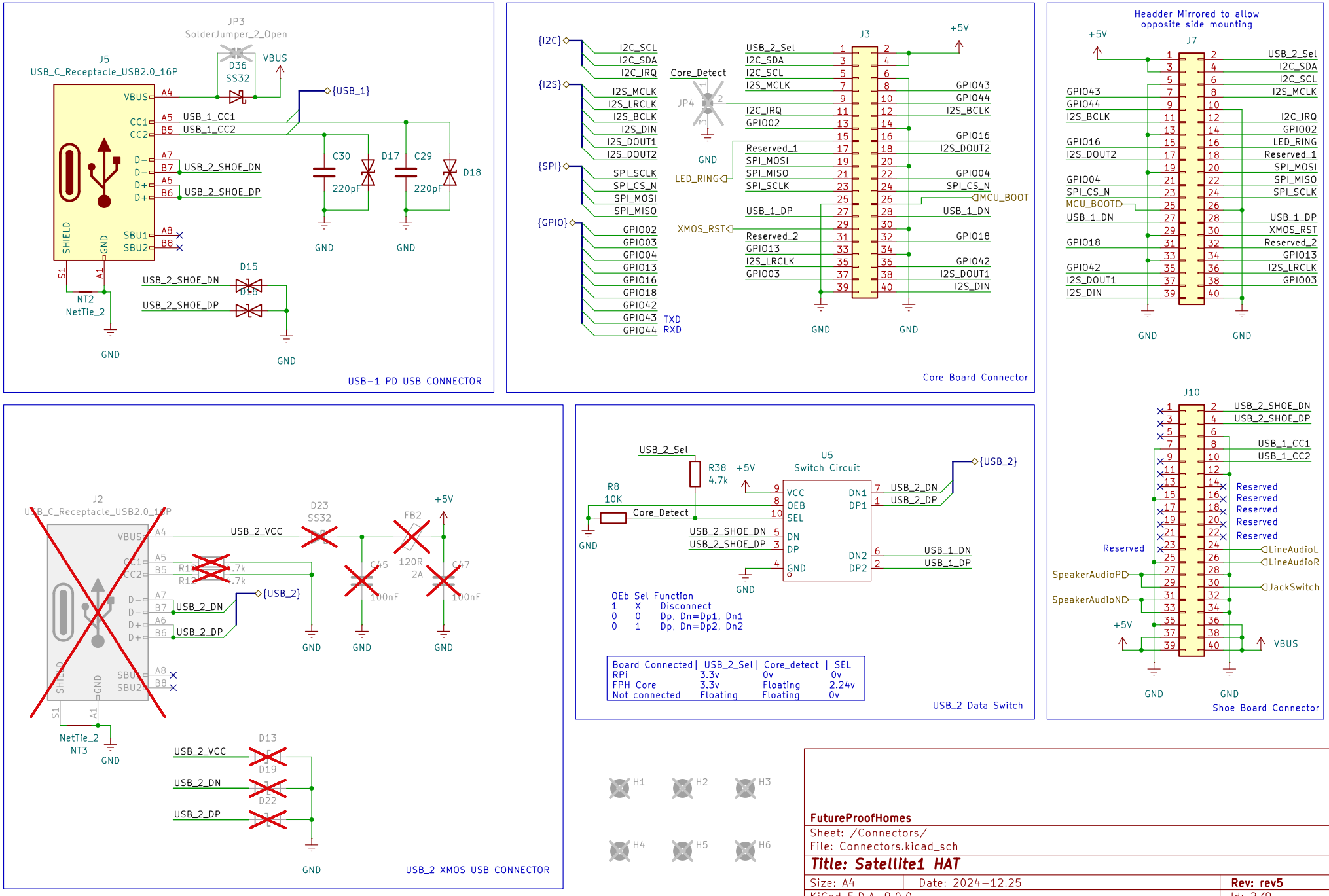
USB-1 PD USB CONNECTOR
J5
USB_C_Receptacle_USB2.0_16P
JP3
SolderJumper_2_Open
D36
SS32
VBUS
{USB_1}
USB_1_CC1
USB_1_CC2
USB_2_SHOE_DN
USB_2_SHOE_DP
C30
220pF
D17
C29
220pF
D18
D15
D16
NT2
NetTie_2
GND
Core Board Connector
J3
{I2C}
I2C_SCL
I2C_SDA
I2C_IRQ
{I2S}
I2S_MCLK
I2S_LRCLK
I2S_BCLK
I2S_DIN
I2S_DOUT1
I2S_DOUT2
{SPI}
SPI_SCLK
SPI_CS_N
SPI_MOSI
SPI_MISO
{GPIO}
GPIO002
GPIO003
GPIO004
GPIO013
GPIO016
GPIO018
GPIO042
GPIO043
GPIO044
TXD
RXD
Core_Detect
JP4
LED_RING
XMOS_RST
USB_2_Sel
Reserved_1
Reserved_2
USB_1_DP
USB_1_DN
MCU_BOOT
+5V
Header Mirrored to allow opposite side mounting
J7
Reserved_2
LED_RING
Reserved
Shoe Board Connector
J10
LineAudioL
LineAudioR
JackSwitch
SpeakerAudioP
SpeakerAudioN
VBUS
USB_2 Data Switch
U5
Switch Circuit
R38
4.7k
R8
10K
VCC
OEB
SEL
DN
DP
GND
DN1
DP1
DN2
DP2
{USB_2}
OEb Sel Function
1 X Disconnect
0 0 Dp, Dn=Dp1, Dn1
0 1 Dp, Dn=Dp2, Dn2
Board Connected | USB_2_Sel | Core_detect | SEL
RPi | 3.3v | 0v | 0v
FPH Core | 3.3v | Floating | 2.24v
Not connected | Floating | Floating | 0v
USB_2 XMOS USB CONNECTOR
J2
USB_C_Receptacle_USB2.0_16P
USB_2_VCC
D23
SS32
FB2
120R
2A
C45
100nF
C47
100nF
R11
R12
4.7k
NetTie_2
NT3
D13
D19
D22
H1
H2
H3
H4
H5
H6
FutureProofHomes
Sheet: /Connectors/
File: Connectors.kicad_sch
Title: Satellite1 HAT
Size: A4
Date: 2024-12.25
Rev: rev5
KiCad E.D.A. 9.0.0
Id: 2/9

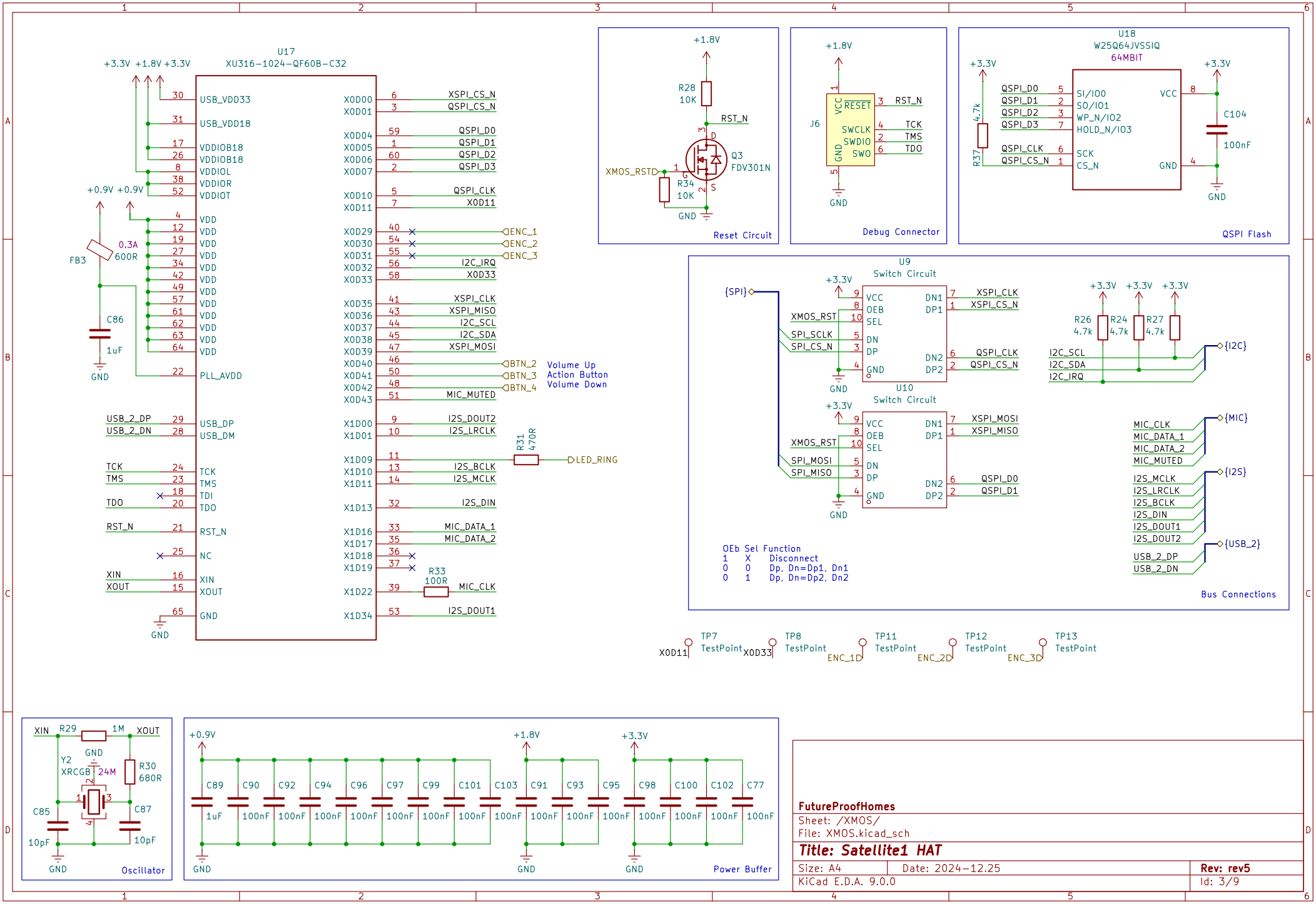
U17
XU316-1024-QF60B-C32
+3.3V +1.8V +3.3V
+0.9V +0.9V
FB3
0.3A
600R
C86
1uF
GND
USB_VDD33
USB_VDD18
VDDIOB18
VDDIOB18
VDDIOL
VDDIOR
VDDIOT
VDD
PLL_AVDD
USB_DP
USB_DM
TCK
TMS
TDI
TDO
RST_N
NC
XIN
XOUT
USB_2_DP
USB_2_DN
X0D00 XSPI_CS_N
X0D01 QSPI_CS_N
X0D04 QSPI_D0
X0D05 QSPI_D1
X0D06 QSPI_D2
X0D07 QSPI_D3
X0D10 QSPI_CLK
X0D11 X0D11
X0D29 ENC_1
X0D30 ENC_2
X0D31 ENC_3
X0D32 I2C_IRQ
X0D33 X0D33
X0D35 XSPI_CLK
X0D36 XSPI_MISO
X0D37 I2C_SCL
X0D38 I2C_SDA
X0D39 XSPI_MOSI
X0D40 BTN_2
X0D41 BTN_3
X0D42 BTN_4
X0D43 MIC_MUTED
X1D00 I2S_DOUT2
X1D01 I2S_LRCLK
X1D09 I2S_BCLK
X1D10 I2S_MCLK
X1D13 I2S_DIN
X1D16 MIC_DATA_1
X1D17 MIC_DATA_2
X1D22 MIC_CLK
X1D34 I2S_DOUT1
Volume Up
Action Button
Volume Down
R31
470R
LED_RING
R33
100R
+1.8V
R28
10K
RST_N
Q3
FDV301N
XMOS_RSTD
R34
10K
GND
Reset Circuit
+1.8V
J6
VCC
RESET
SWCLK
SWDIO
SWO
GND
RST_N
TCK
TMS
TDO
Debug Connector
U18
W25Q64JVSSIQ
64MBIT
+3.3V
4.7k
R37
QSPI_D0
QSPI_D1
QSPI_D2
QSPI_D3
QSPI_CLK
QSPI_CS_N
SI/IO0
SO/IO1
WP_N/IO2
HOLD_N/IO3
SCK
CS_N
VCC
GND
C104
100nF
QSPI Flash
U9
Switch Circuit
{SPI}
XMOS_RST
SPI_SCLK
SPI_CS_N
VCC
OEB
SEL
DN
DP
GND
DN1
DP1
DN2
DP2
XSPI_CLK
XSPI_CS_N
QSPI_CLK
QSPI_CS_N
R26
4.7k
R24
4.7k
R27
4.7k
I2C_SCL
I2C_SDA
I2C_IRQ
{I2C}
U10
Switch Circuit
SPI_MOSI
SPI_MISO
XSPI_MOSI
XSPI_MISO
QSPI_D0
QSPI_D1
MIC_CLK
MIC_DATA_1
MIC_DATA_2
MIC_MUTED
{MIC}
I2S_MCLK
I2S_LRCLK
I2S_BCLK
I2S_DIN
I2S_DOUT1
I2S_DOUT2
{I2S}
USB_2_DP
USB_2_DN
{USB_2}
OEb Sel Function
1 X Disconnect
0 0 Dp, Dn=Dp1, Dn1
0 1 Dp, Dn=Dp2, Dn2
Bus Connections
TP7 TestPoint X0D11
TP8 TestPoint X0D33
TP11 TestPoint ENC_1
TP12 TestPoint ENC_2
TP13 TestPoint ENC_3
XIN R29 1M XOUT
Y2
XRCGB 24M
R30
680R
C85
10pF
C87
10pF
Oscillator
+0.9V
C89 C90 C92 C94 C96 C97 C99 C101 C103
1uF 100nF 100nF 100nF 100nF 100nF 100nF 100nF 100nF
+1.8V
C91 C93 C95
100nF 100nF 100nF
+3.3V
C98 C100 C102 C77
100nF 100nF 100nF 100nF
Power Buffer
FutureProofHomes
Sheet: /XMOS/
File: XMOS.kicad_sch
Title: Satellite1 HAT
Size: A4
Date: 2024-12.25
Rev: rev5
KiCad E.D.A. 9.0.0
Id: 3/9

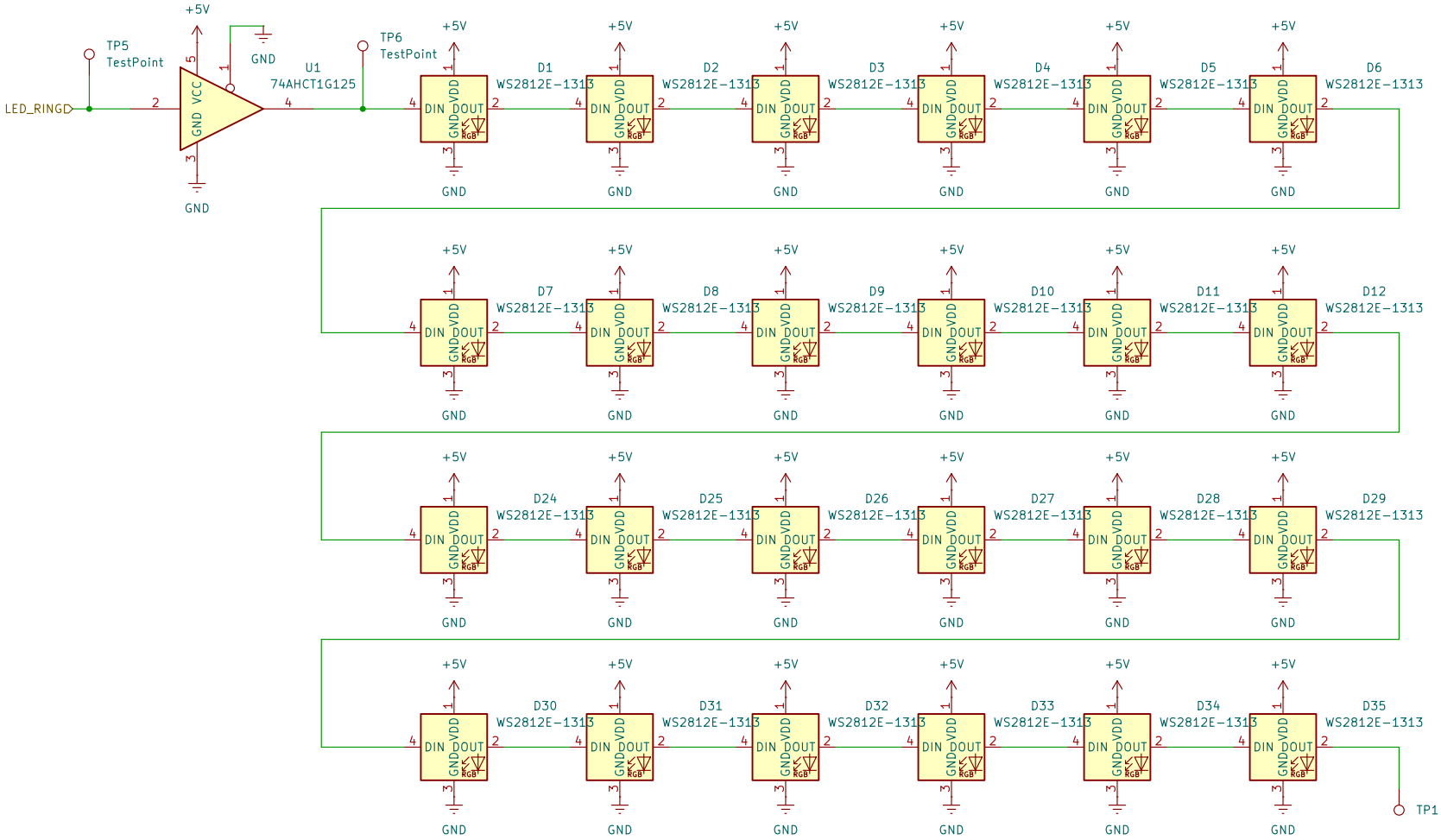

FutureProofHomes

Sheet: /LED/

File: LED.kicad_sch

Title: Satellite1 HAT

Size: A4	Date: 2024-12.25	**Rev: rev5**
KiCad E.D.A. 9.0.0		Id: 4/9

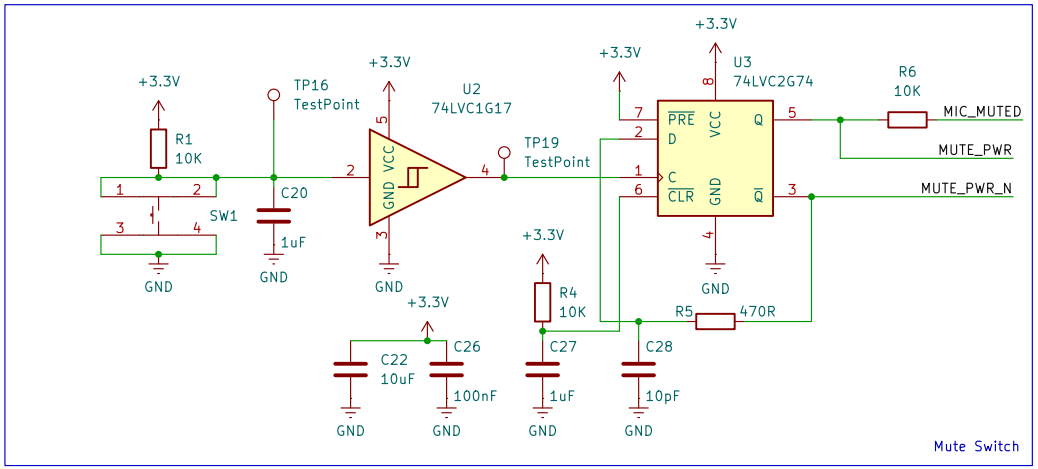

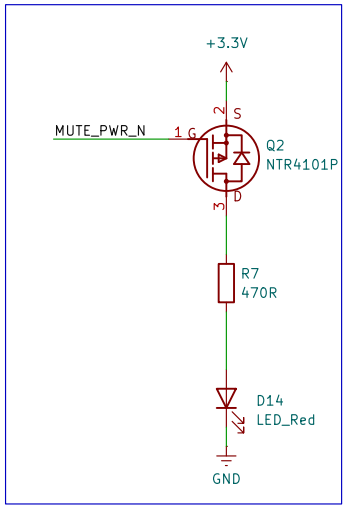

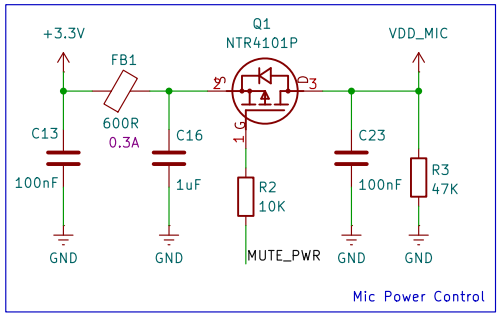

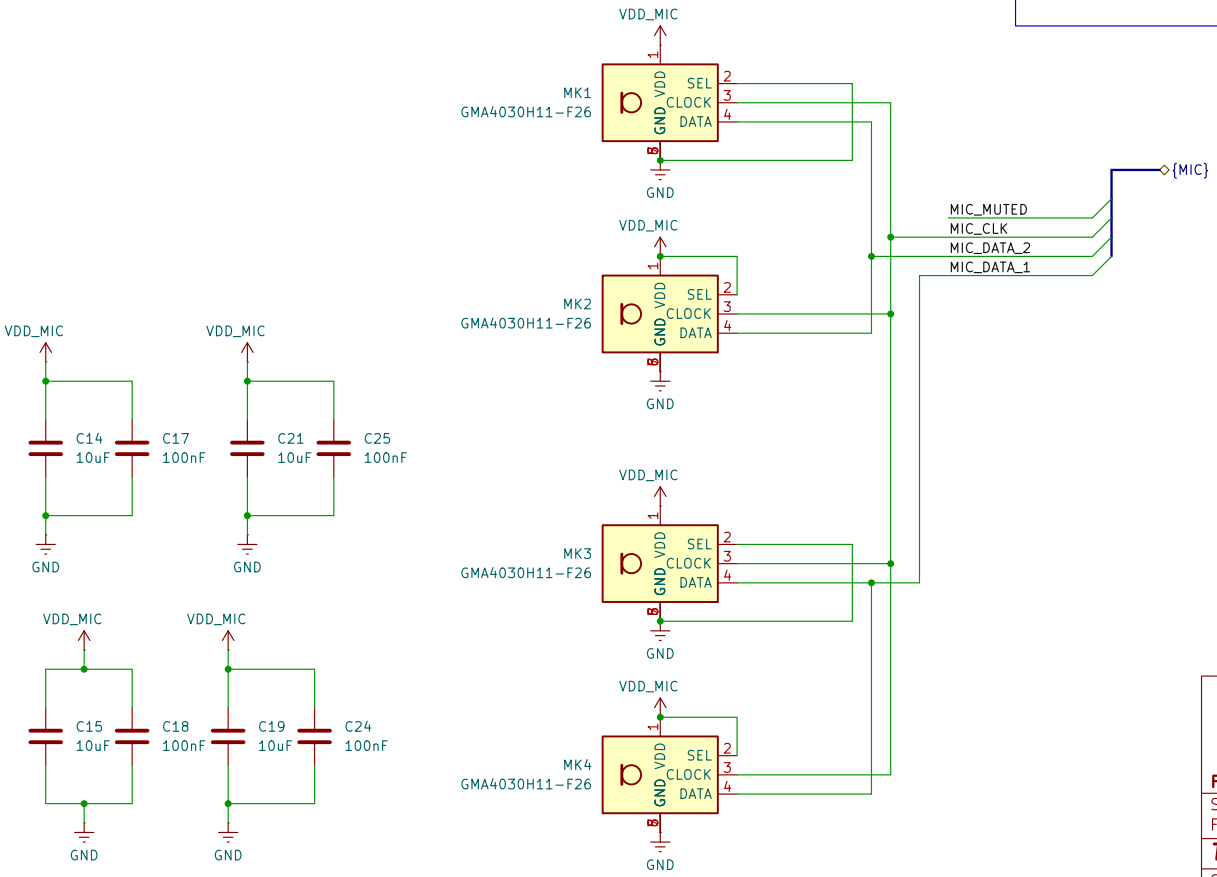

FutureProofHomes

Sheet: /Microphone/

File: Microphone.kicad_sch

Title: Satellite1 HAT

Size: A4	Date: 2024-12.25	Rev: rev5
KiCad E.D.A. 9.0.0		Id: 5/9

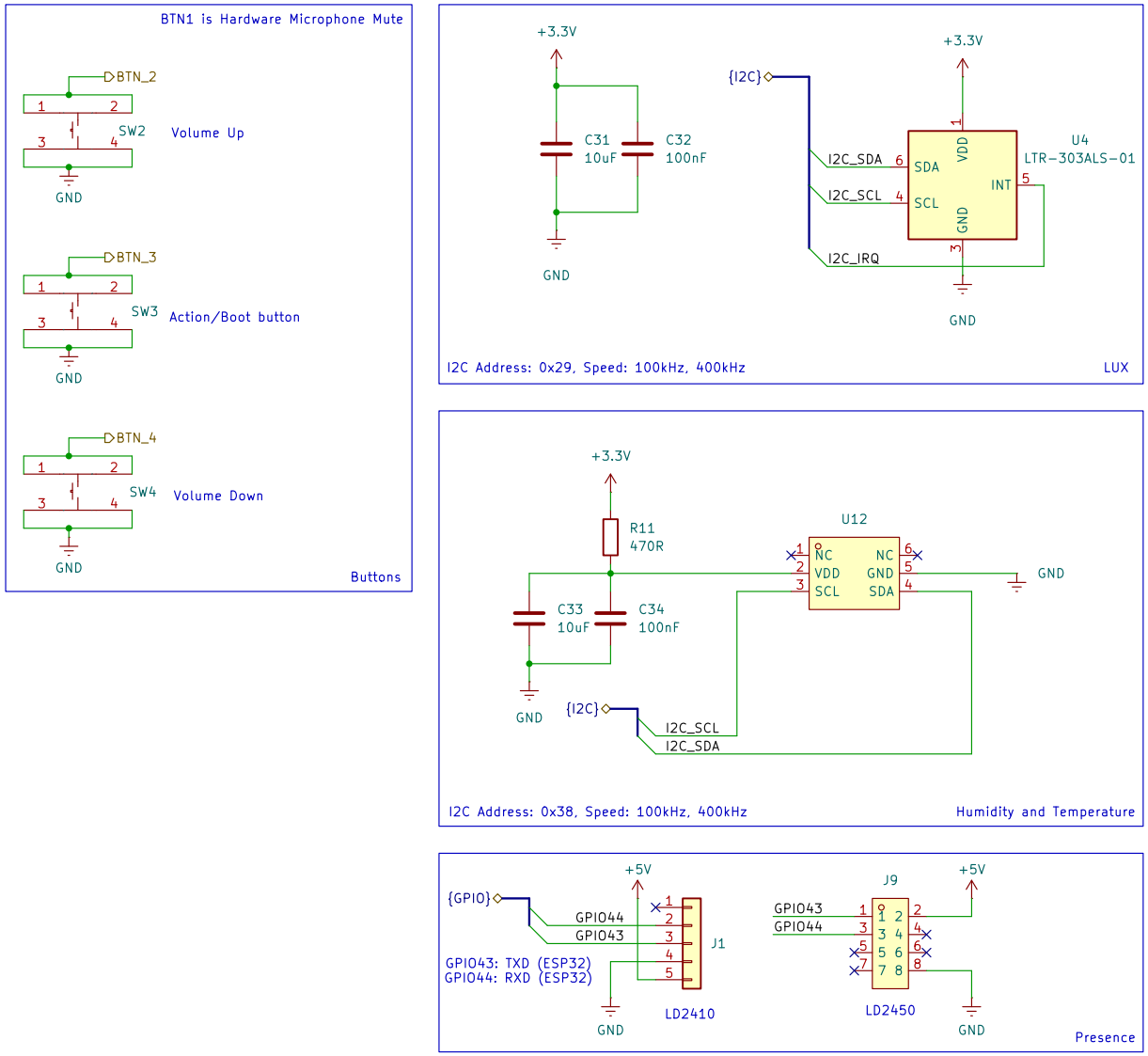

FutureProofHomes

Sheet: /Sensors/

File: Sensors.kicad_sch

Title: Satellite1 HAT

Size: A4	Date: 2024-12.25	**Rev: rev5**
KiCad E.D.A. 9.0.0		Id: 6/9

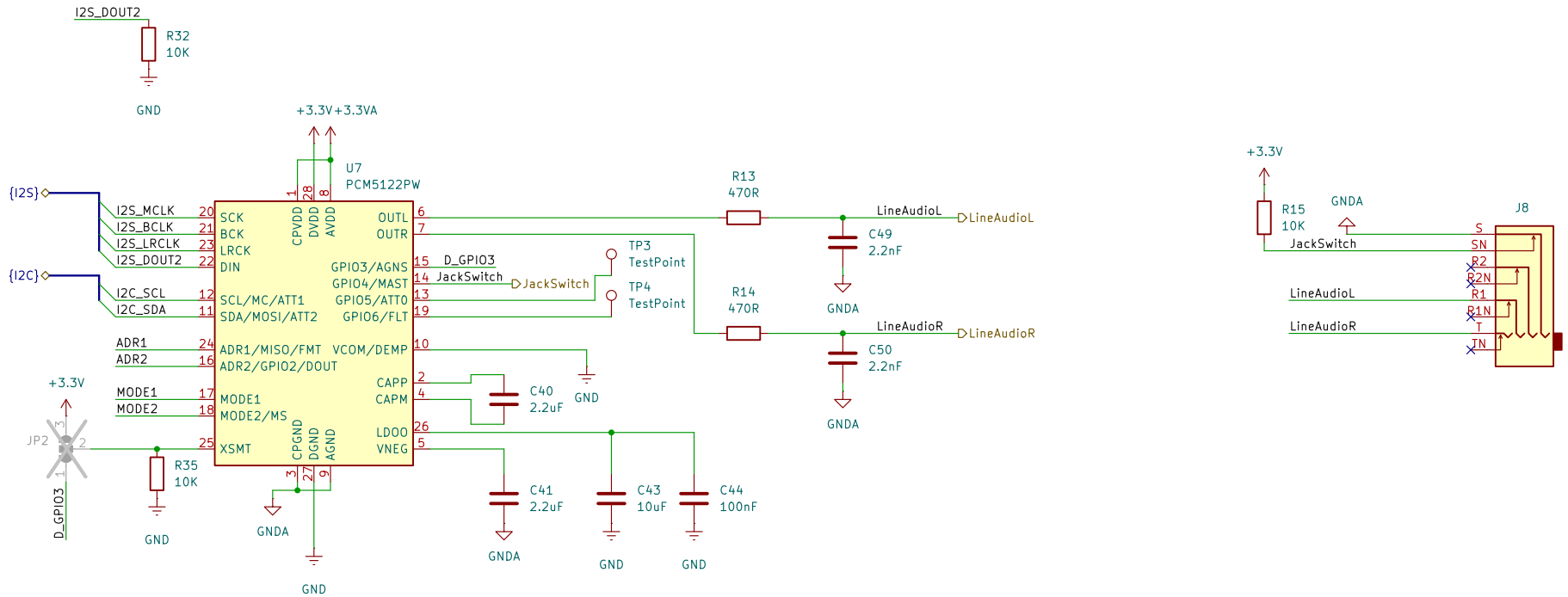

I2C Address: 0x4D, Speed: 100kHz, 400kHz

Address:	Mode control selection pin:		Soft mute control:
ADR1 = Low, ADR2 = Low: 0x4C ADR1 = High, ADR2 = Low: 0x4D ADR1 = Low, ADR2 = High: 0x4E ADR1 = High, ADR2 = High: 0x4F	MODE1 = Low, MODE2 = Low: MODE1 = Low, MODE2 = High: MODE1 = High:	Hardwired mode I2C mode SPI mode	Soft mute (Low) soft un-mute (High)

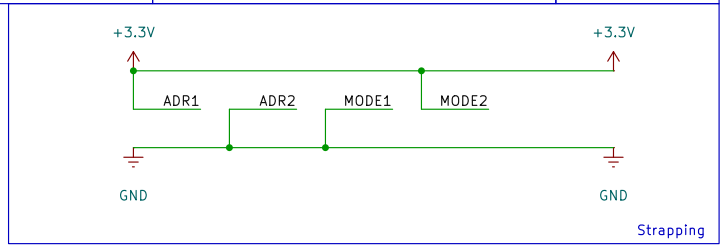

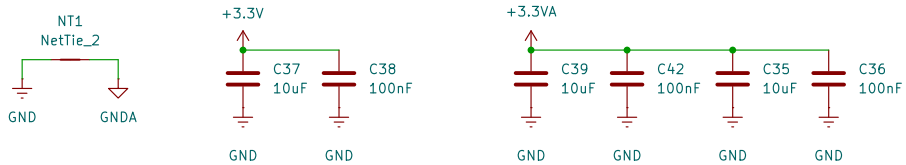

FutureProofHomes

Sheet: /DAC/
File: DAC.kicad_sch

Title: Satellite1 HAT

Size: A4	Date: 2024-12.25	**Rev: rev5**
KiCad E.D.A. 9.0.0		Id: 8/9

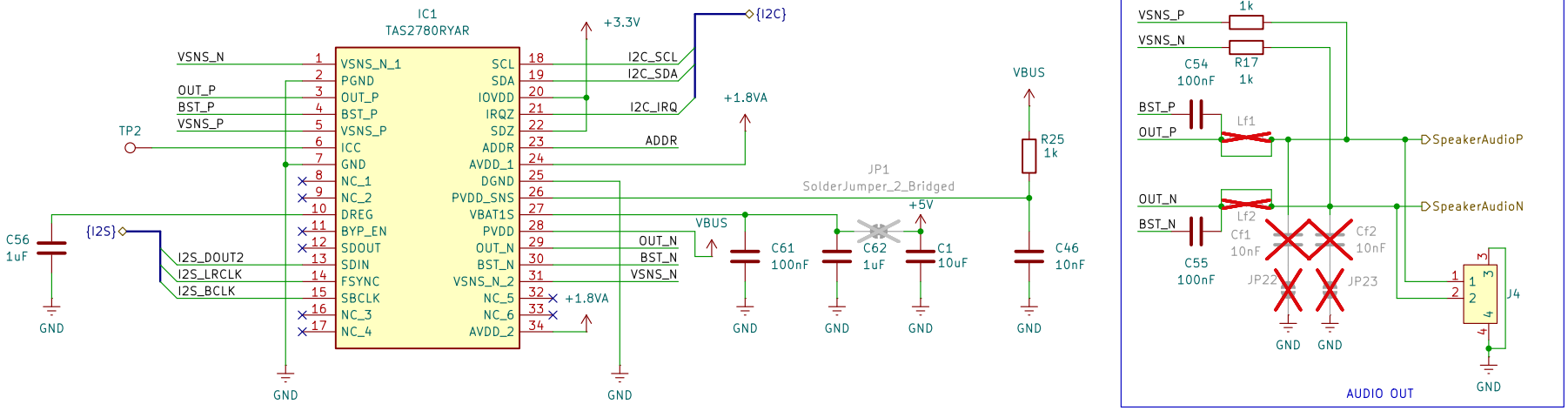

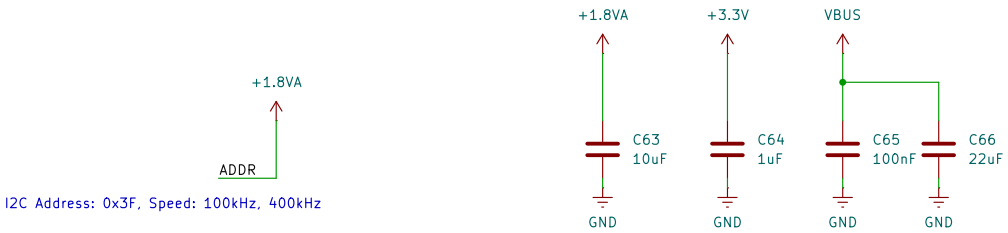

FutureProofHomes

Sheet: /PowerDAC/
File: PowerDAC.kicad_sch

Title: Satellite1 HAT

Size: A4	Date: 2024-12.25	**Rev: rev5**
KiCad E.D.A. 9.0.0		Id: 9/9

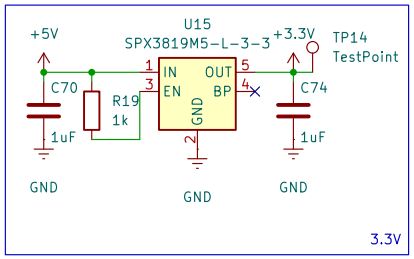

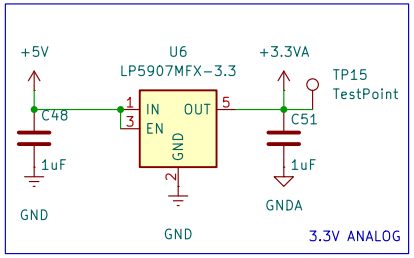

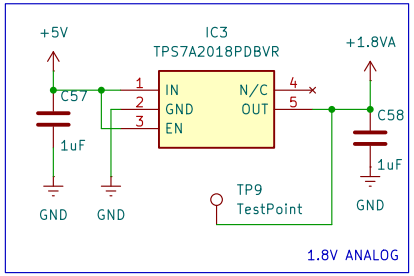

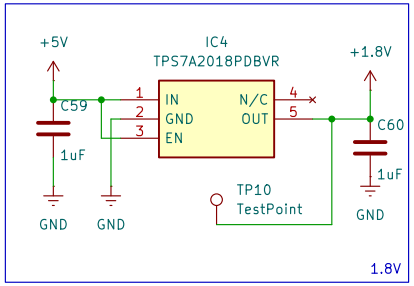

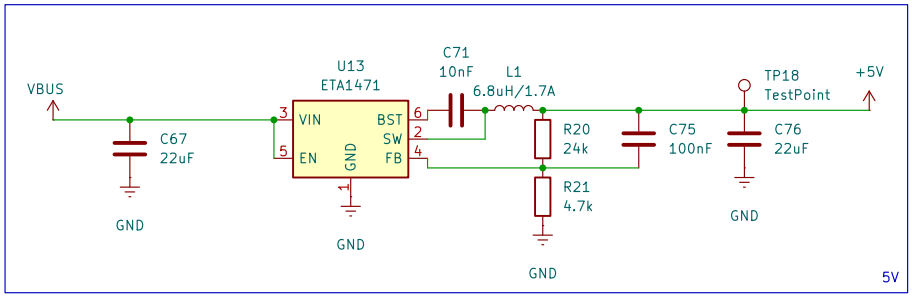

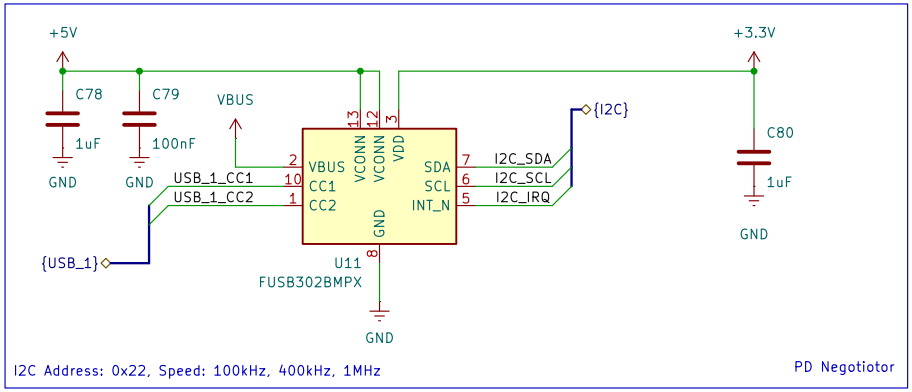

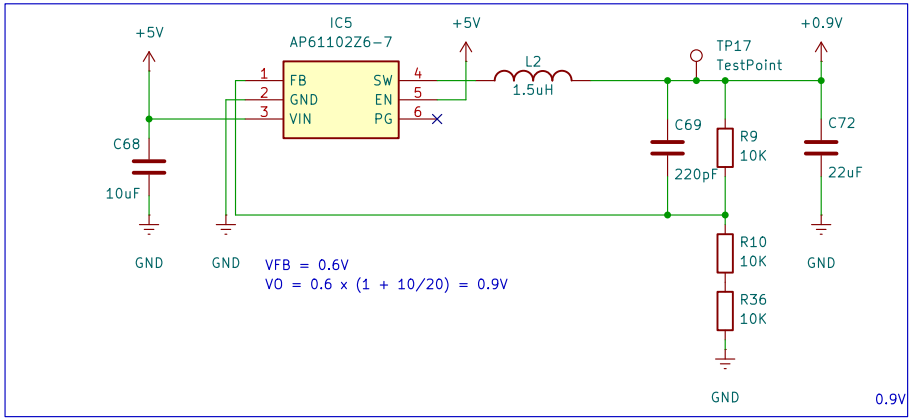

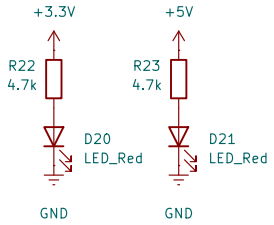

FutureProofHomes

Sheet: /Power/
File: Power.kicad_sch

Title: Satellite1 HAT

Size: A4	Date: 2024-12.25	**Rev: rev5**
KiCad E.D.A. 9.0.0		Id: 10/9