FutureProofHomes — Satellite1 HAT rev6

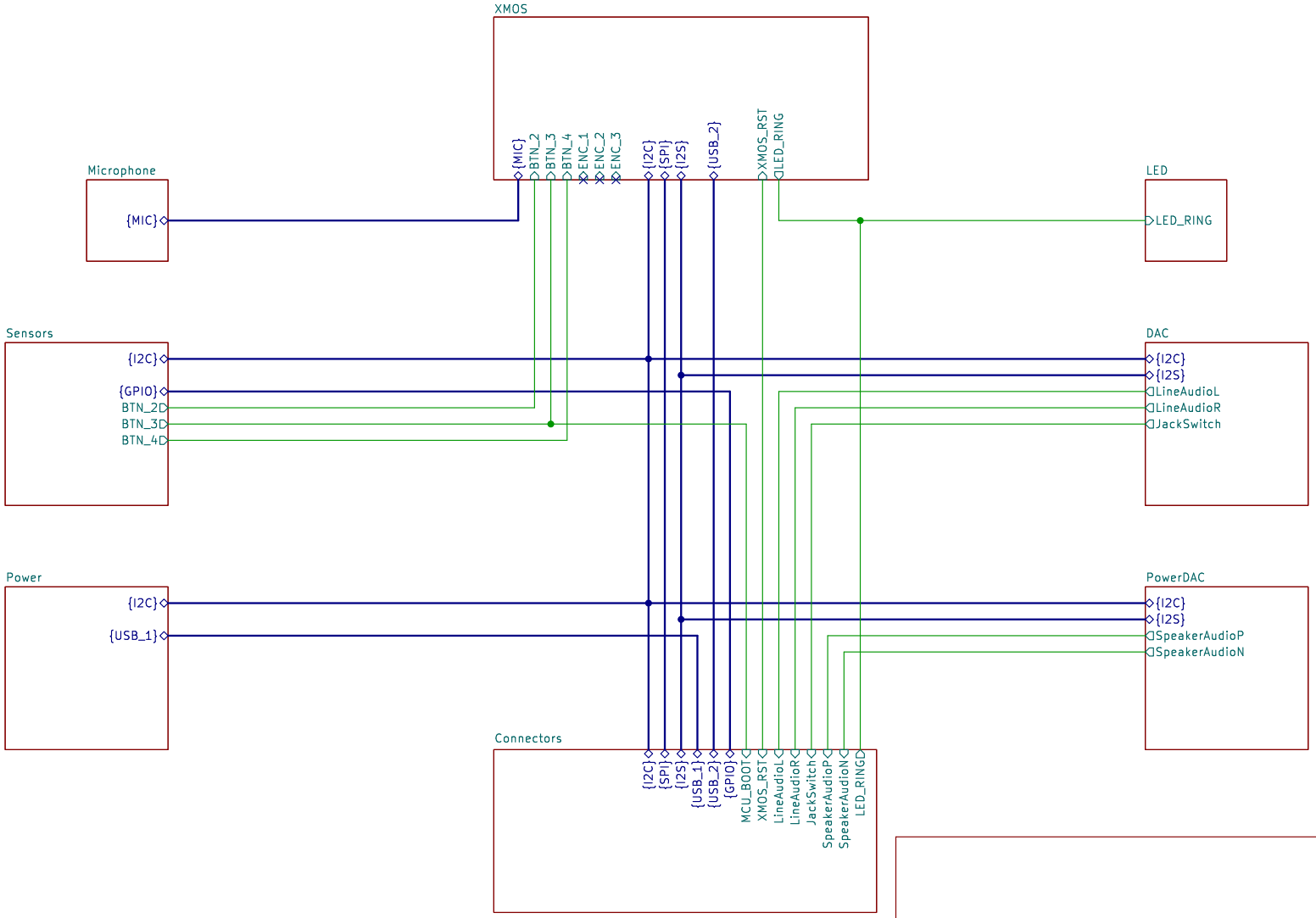

FutureProofHomes

Sheet: /

File: Internal-Satellite1-Hat.kicad_sch

Title: Satellite1 HAT

Size: A4	Date: 2025-03-18	**Rev: R2025.03.18**
KiCad E.D.A. 9.0.0		Id: 1/9

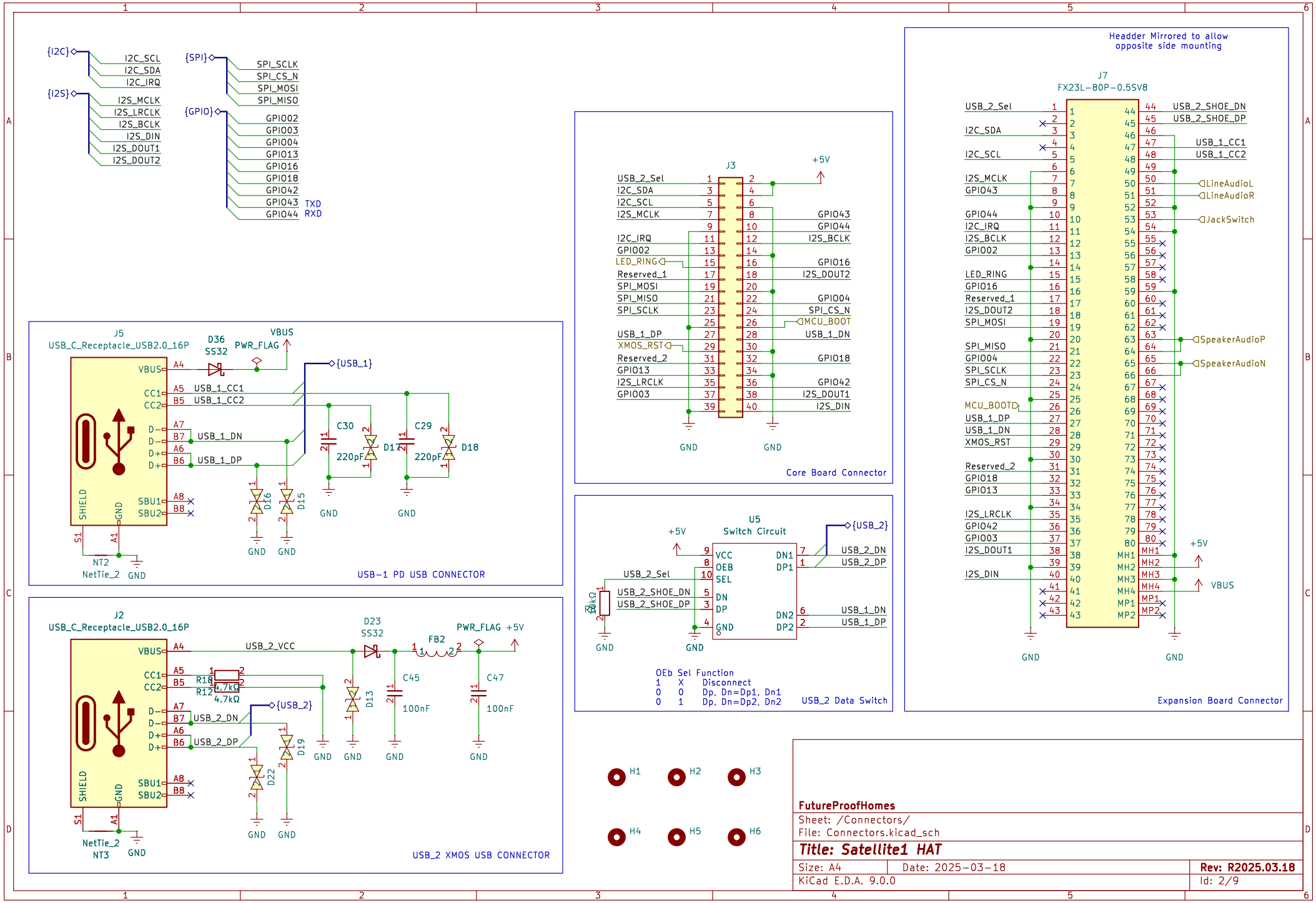

FutureProofHomes

Sheet: /Connectors/

File: Connectors.kicad_sch

Title: Satellite1 HAT

Size: A4	Date: 2025-03-18	Rev: R2025.03.18
KiCad E.D.A. 9.0.0		Id: 2/9

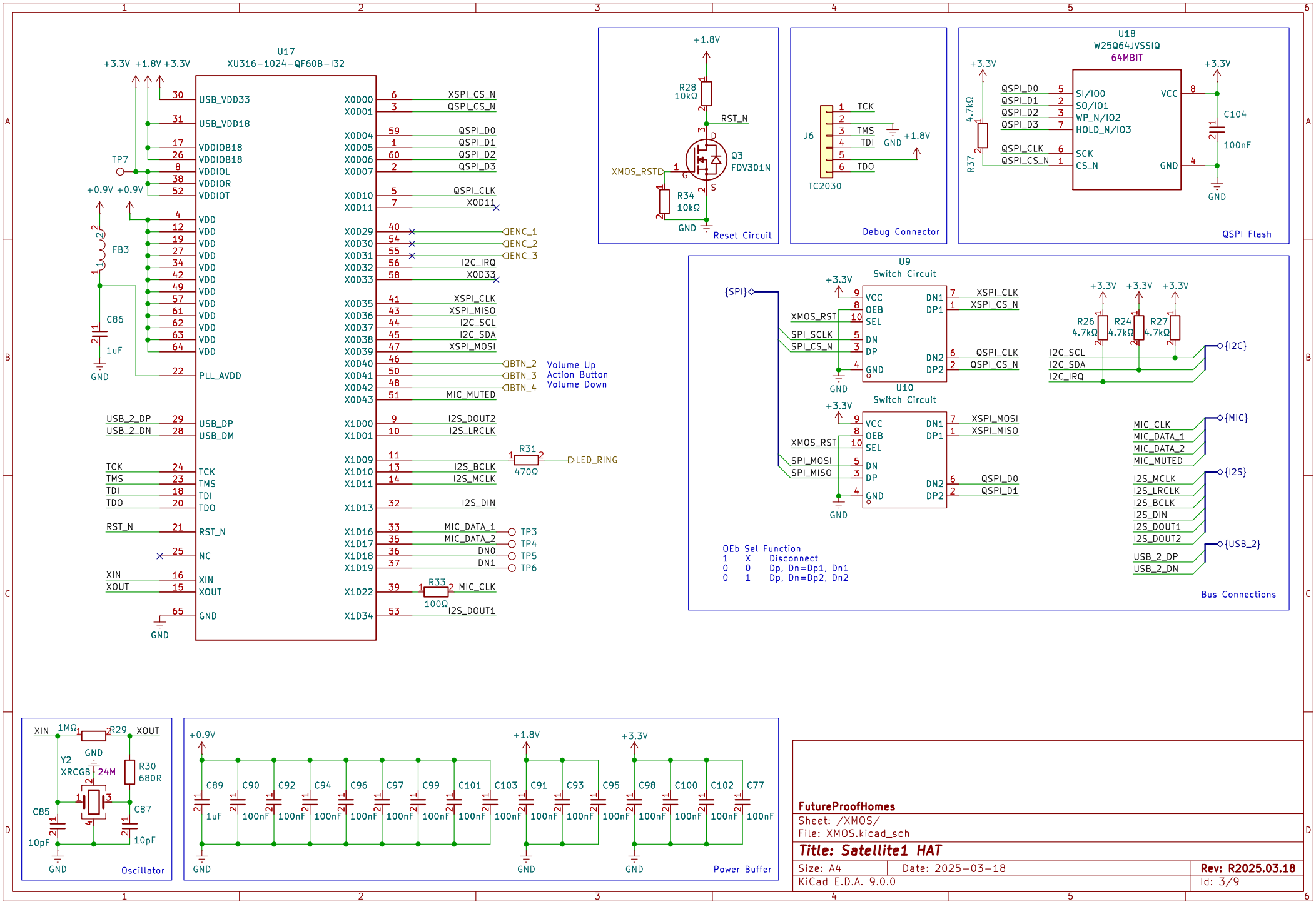
U17
XU316-1024-QF60B-I32
+3.3V +1.8V +3.3V
USB_VDD33
USB_VDD18
VDDIOB18
VDDIOB18
VDDIOL
VDDIOR
VDDIOT
+0.9V +0.9V
TP7
FB3
C86
1uF
GND
VDD
PLL_AVDD
USB_2_DP
USB_2_DN
USB_DP
USB_DM
TCK
TMS
TDI
TDO
RST_N
NC
XIN
XOUT
X0D00 XSPI_CS_N
X0D01 QSPI_CS_N
X0D04 QSPI_D0
X0D05 QSPI_D1
X0D06 QSPI_D2
X0D07 QSPI_D3
X0D10 QSPI_CLK
X0D11 X0D11
X0D29 ENC_1
X0D30 ENC_2
X0D31 ENC_3
X0D32 I2C_IRQ
X0D33 X0D33
X0D35 XSPI_CLK
X0D36 XSPI_MISO
X0D37 I2C_SCL
X0D38 I2C_SDA
X0D39 XSPI_MOSI
X0D40 BTN_2 Volume Up
X0D41 BTN_3 Action Button
X0D42 BTN_4 Volume Down
X0D43 MIC_MUTED
X1D00 I2S_DOUT2
X1D01 I2S_LRCLK
X1D09 R31 470Ω LED_RING
X1D10 I2S_BCLK
X1D11 I2S_MCLK
X1D13 I2S_DIN
X1D16 MIC_DATA_1 TP3
X1D17 MIC_DATA_2 TP4
X1D18 DN0 TP5
X1D19 DN1 TP6
X1D22 R33 100Ω MIC_CLK
X1D34 I2S_DOUT1
+1.8V
R28 10kΩ
RST_N
Q3 FDV301N
XMOS_RST
R34 10kΩ
GND
Reset Circuit
J6
TCK
TMS
TDI
TDO
TC2030
Debug Connector
U18
W25Q64JVSSIQ
64MBIT
+3.3V
4.7kΩ
R37
QSPI_D0 SI/IO0
QSPI_D1 SO/IO1
QSPI_D2 WP_N/IO2
QSPI_D3 HOLD_N/IO3
QSPI_CLK SCK
QSPI_CS_N CS_N
VCC
GND
C104
100nF
QSPI Flash
U9
Switch Circuit
{SPI}
XMOS_RST
SPI_SCLK
SPI_CS_N
VCC
OEB
SEL
DN
DP
GND
DN1 XSPI_CLK
DP1 XSPI_CS_N
DN2 QSPI_CLK
DP2 QSPI_CS_N
R26 4.7kΩ
R24 4.7kΩ
R27 4.7kΩ
I2C_SCL
I2C_SDA
I2C_IRQ
{I2C}
U10
Switch Circuit
SPI_MOSI
SPI_MISO
DN1 XSPI_MOSI
DP1 XSPI_MISO
DN2 QSPI_D0
DP2 QSPI_D1
MIC_CLK
MIC_DATA_1
MIC_DATA_2
MIC_MUTED
{MIC}
I2S_MCLK
I2S_LRCLK
I2S_BCLK
I2S_DIN
I2S_DOUT1
I2S_DOUT2
{I2S}
USB_2_DP
USB_2_DN
{USB_2}
OEb Sel Function
1 X Disconnect
0 0 Dp, Dn=Dp1, Dn1
0 1 Dp, Dn=Dp2, Dn2
Bus Connections
XIN
1MΩ
R29
XOUT
Y2
XRCGB 24M
R30 680R
C85 10pF
C87 10pF
Oscillator
+0.9V
C89 1uF
C90 C92 C94 C96 C97 C99 C101 C103 100nF
+1.8V
C91 C93 C95 100nF
+3.3V
C98 C100 C102 C77 100nF
Power Buffer
FutureProofHomes
Sheet: /XMOS/
File: XMOS.kicad_sch
Title: Satellite1 HAT
Size: A4
Date: 2025-03-18
Rev: R2025.03.18
KiCad E.D.A. 9.0.0
Id: 3/9

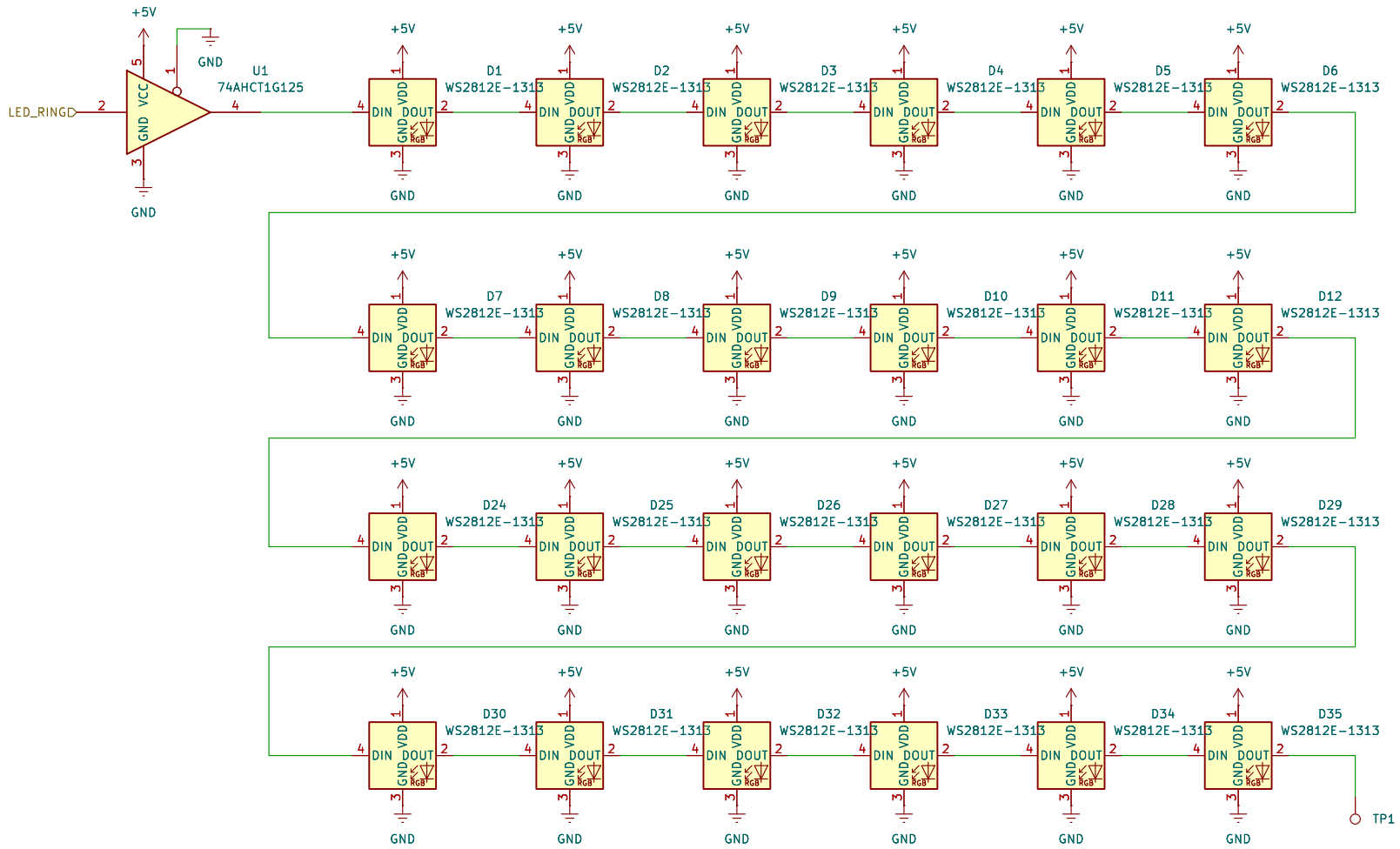

FutureProofHomes

Sheet: /LED/

File: LED.kicad_sch

Title: Satellite1 HAT

Size: A4	Date: 2025-03-18	**Rev: R2025.03.18**
KiCad E.D.A. 9.0.0		Id: 4/9

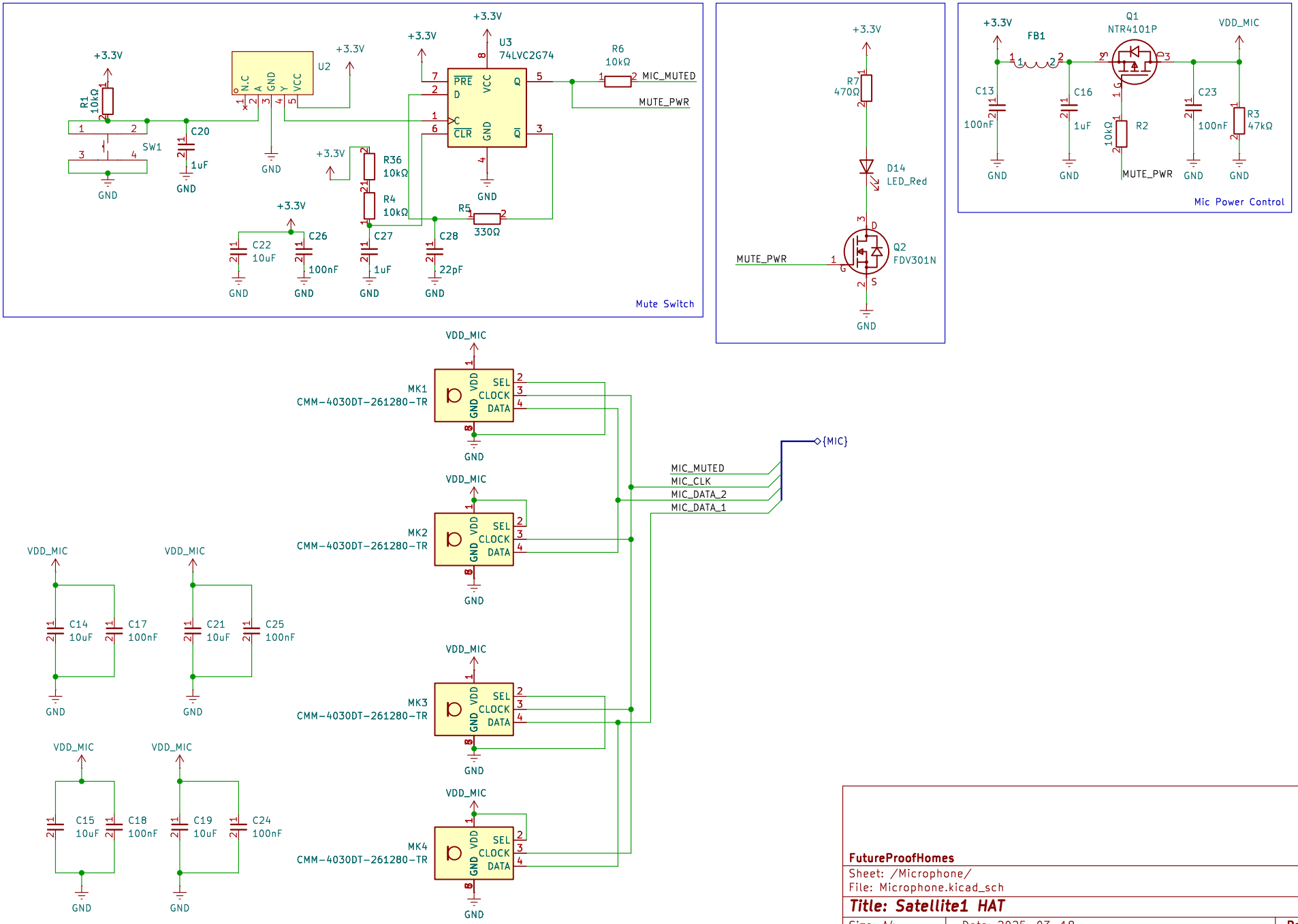

FutureProofHomes

Sheet: /Microphone/
File: Microphone.kicad_sch

Title: Satellite1 HAT

Size: A4	Date: 2025-03-18	**Rev: R2025.03.18**
KiCad E.D.A. 9.0.0		Id: 5/9

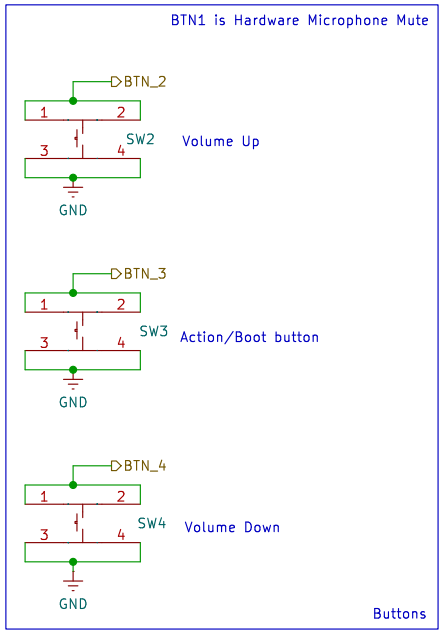

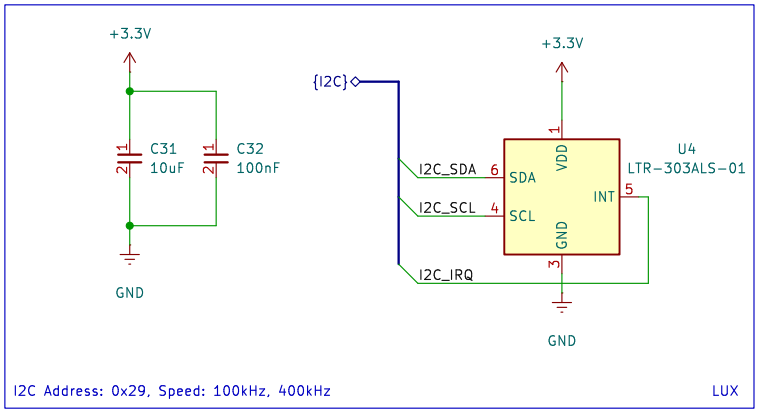

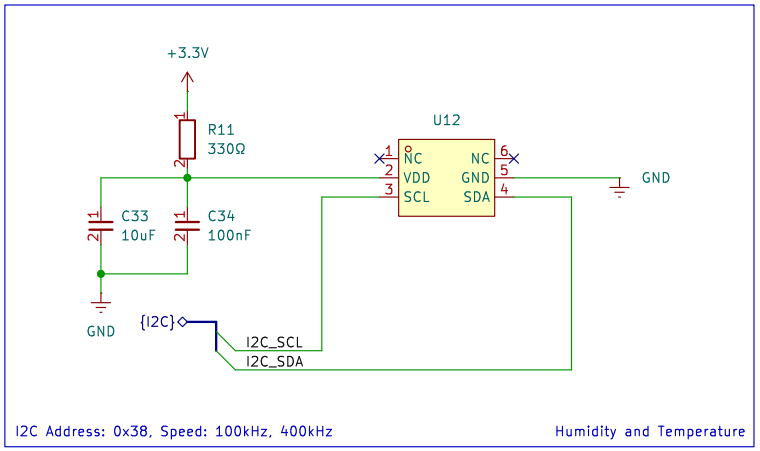

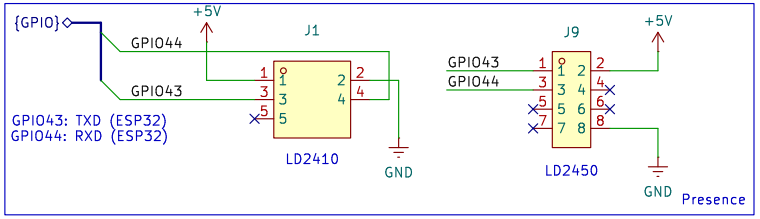

FutureProofHomes

Sheet: /Sensors/
File: Sensors.kicad_sch

Title: Satellite1 HAT

Size: A4	Date: 2025-03-18	**Rev: R2025.03.18**
KiCad E.D.A. 9.0.0		Id: 6/9

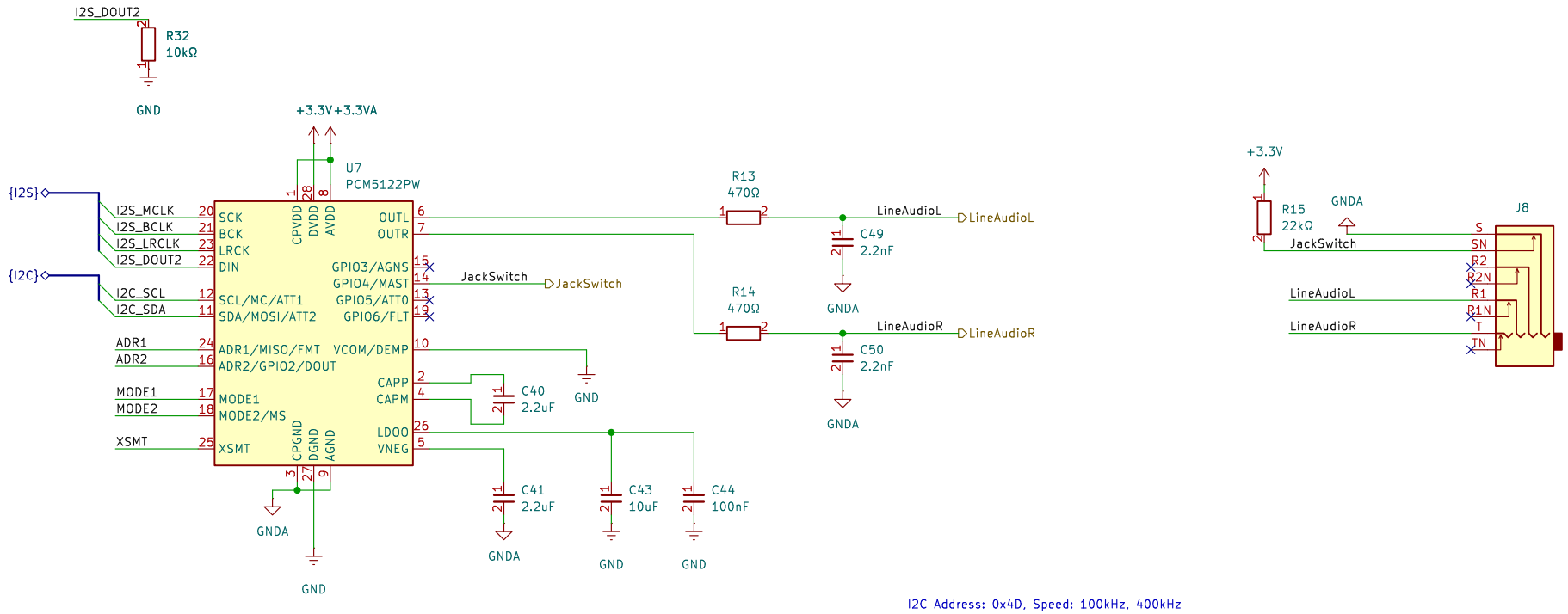

I2C Address: 0x4D, Speed: 100kHz, 400kHz

Address:	Mode control selection pin:		Soft mute control:
ADR1 = Low, ADR2 = Low: 0x4C ADR1 = High, ADR2 = Low: 0x4D ADR1 = Low, ADR2 = High: 0x4E ADR1 = High, ADR2 = High: 0x4F	MODE1 = Low, MODE2 = Low: MODE1 = Low, MODE2 = High: MODE1 = High:	Hardwired mode I2C mode SPI mode	Soft mute (Low) soft un-mute (High)

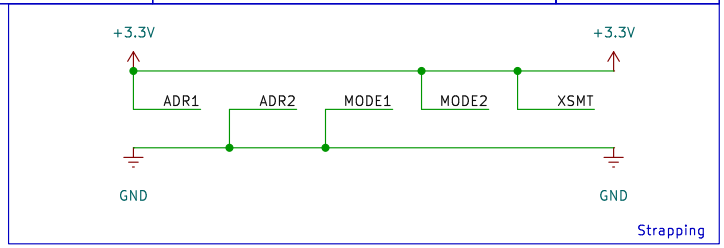

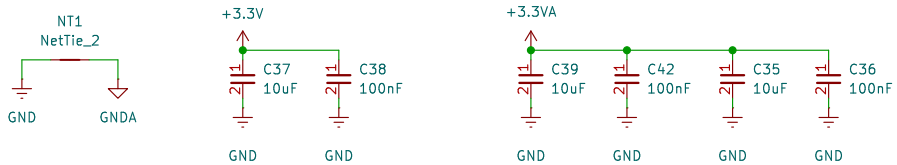

FutureProofHomes

Sheet: /DAC/
File: DAC.kicad_sch

Title: Satellite1 HAT

Size: A4	Date: 2025-03-18	**Rev: R2025.03.18**
KiCad E.D.A. 9.0.0		Id: 8/9

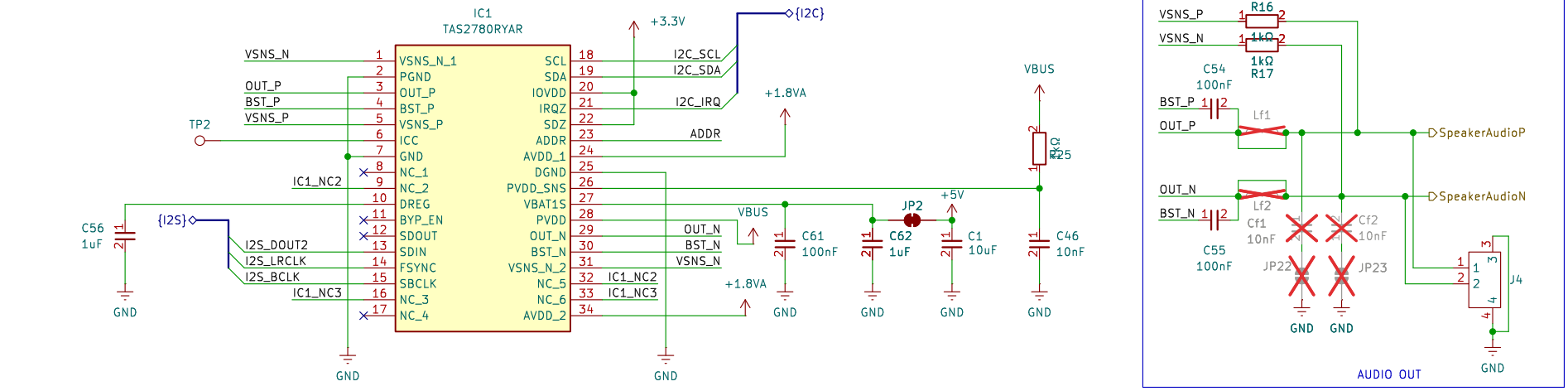

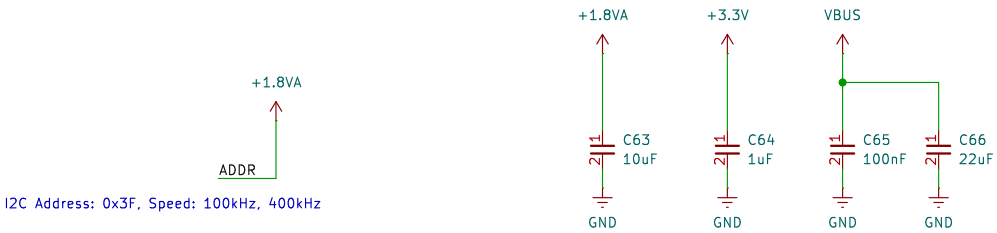

FutureProofHomes

Sheet: /PowerDAC/
File: PowerDAC.kicad_sch

Title: Satellite1 HAT

Size: A4	Date: 2025-03-18	**Rev: R2025.03.18**
KiCad E.D.A. 9.0.0		Id: 9/9

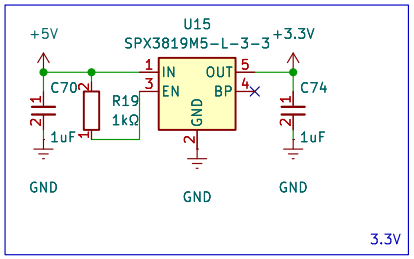

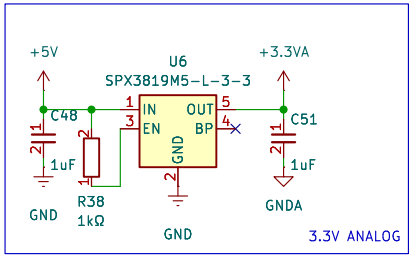

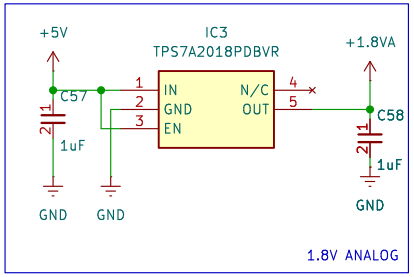

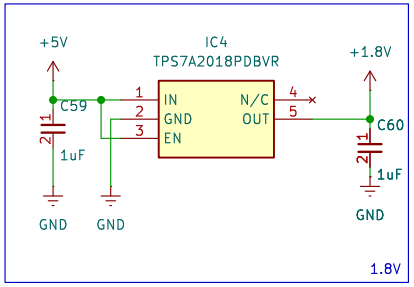

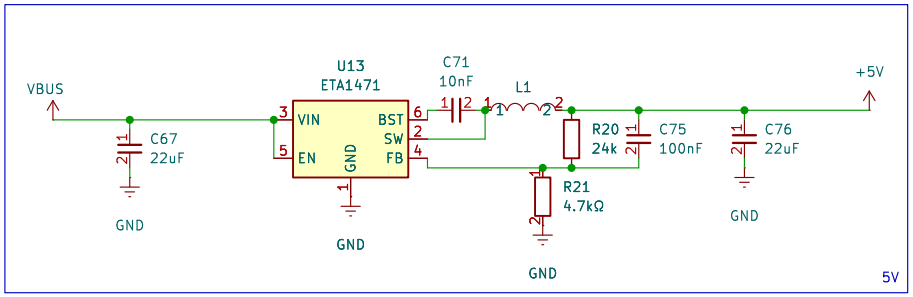

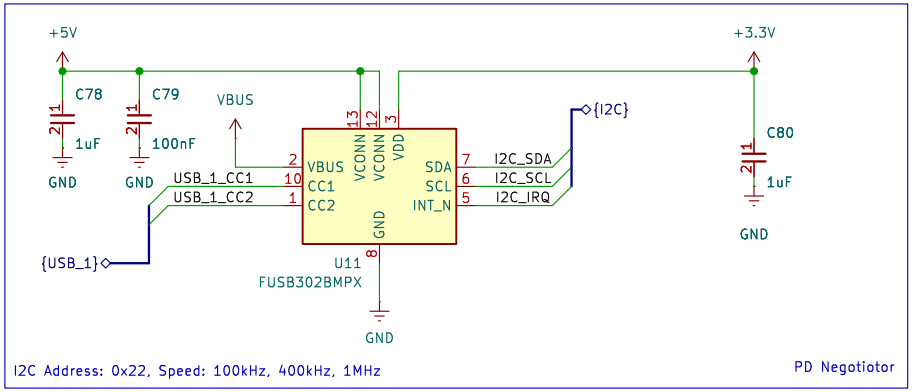

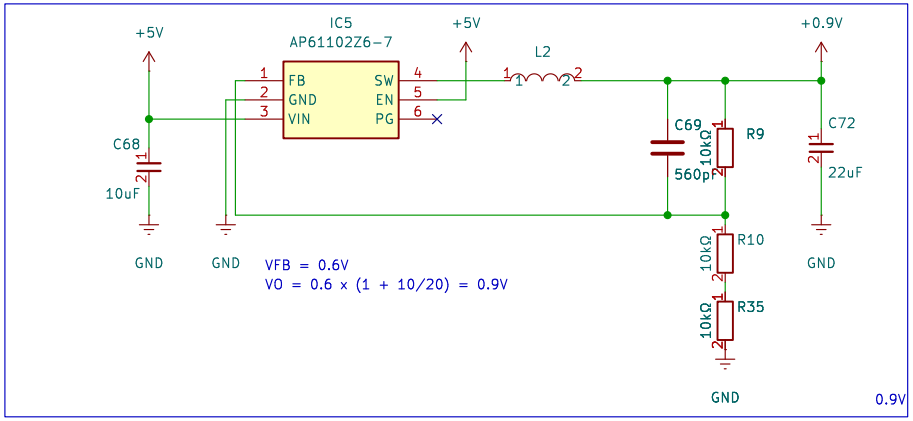

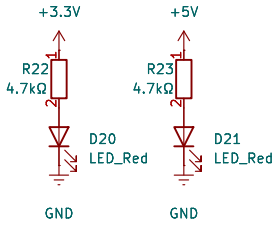

FutureProofHomes

Sheet: /Power/

File: Power.kicad_sch

Title: Satellite1 HAT

Size: A4	Date: 2025-03-18	**Rev: R2025.03.18**
KiCad E.D.A. 9.0.0		Id: 10/9