FutureProofHomes – Satellite1 HAT rev6

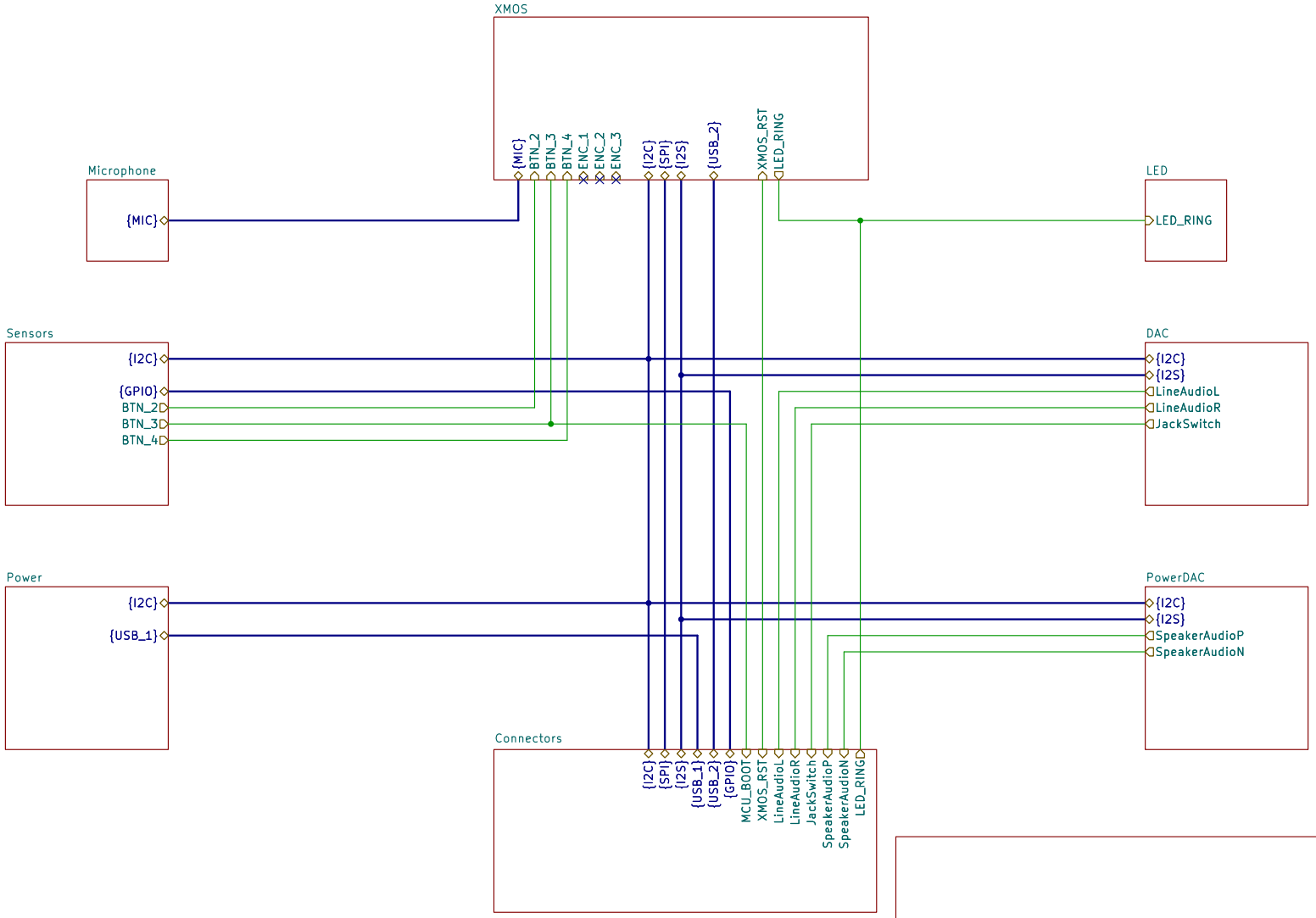

FutureProofHomes

Sheet: /

File: sat1-hat.kicad_sch

Title: Satellite1 HAT

Size: A4	Date: 2025-01-31	**Rev: rev6**
KiCad E.D.A. 9.0.0		Id: 1/9

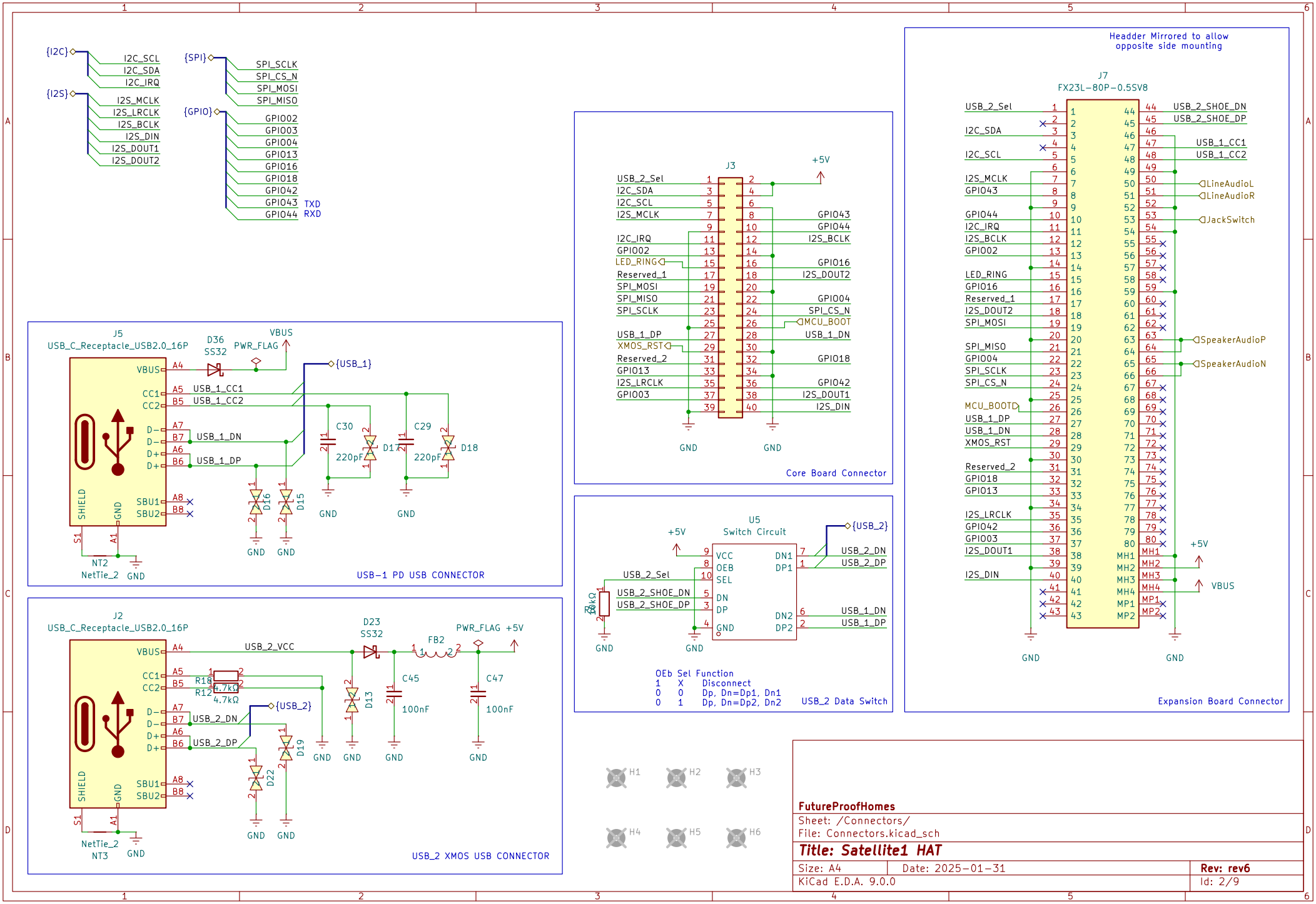
{I2C}
I2C_SCL
I2C_SDA
I2C_IRQ
{I2S}
I2S_MCLK
I2S_LRCLK
I2S_BCLK
I2S_DIN
I2S_DOUT1
I2S_DOUT2
{SPI}
SPI_SCLK
SPI_CS_N
SPI_MOSI
SPI_MISO
{GPIO}
GPIO02
GPIO03
GPIO04
GPIO13
GPIO16
GPIO18
GPIO42
GPIO43 TXD
GPIO44 RXD
J3
+5V
USB_2_Sel
I2C_SDA
I2C_SCL
I2S_MCLK
I2C_IRQ
GPIO02
LED_RING
Reserved_1
SPI_MOSI
SPI_MISO
SPI_SCLK
USB_1_DP
XMOS_RST
Reserved_2
GPIO13
I2S_LRCLK
GPIO03
GPIO43
GPIO44
I2S_BCLK
GPIO16
I2S_DOUT2
GPIO04
SPI_CS_N
MCU_BOOT
USB_1_DN
GPIO18
GPIO42
I2S_DOUT1
I2S_DIN
GND
GND
Core Board Connector
Headder Mirrored to allow opposite side mounting
J7
FX23L-80P-0.5SV8
USB_2_SHOE_DN
USB_2_SHOE_DP
USB_1_CC1
USB_1_CC2
LineAudioL
LineAudioR
JackSwitch
SpeakerAudioP
SpeakerAudioN
+5V
VBUS
MH1
MH2
MH3
MH4
MP1
MP2
Expansion Board Connector
J5
USB_C_Receptacle_USB2.0_16P
D36
SS32
PWR_FLAG
VBUS
{USB_1}
VBUS
CC1
CC2
D-
D-
D+
D+
SHIELD
GND
SBU1
SBU2
S1
A1
USB_1_CC1
USB_1_CC2
USB_1_DN
USB_1_DP
C30
220pF
C29
220pF
D17
D18
D16
D15
NT2
NetTie_2
GND
USB-1 PD USB CONNECTOR
U5
Switch Circuit
+5V
{USB_2}
VCC
OEB
SEL
DN
DP
GND
DN1
DP1
DN2
DP2
USB_2_Sel
USB_2_SHOE_DN
USB_2_SHOE_DP
USB_2_DN
USB_2_DP
USB_1_DN
USB_1_DP
R11
20kΩ
OEb Sel Function
1 X Disconnect
0 0 Dp, Dn=Dp1, Dn1
0 1 Dp, Dn=Dp2, Dn2
USB_2 Data Switch
J2
USB_C_Receptacle_USB2.0_16P
D23
SS32
PWR_FLAG +5V
FB2
USB_2_VCC
R10
R12
4.7kΩ
4.7kΩ
{USB_2}
USB_2_DN
USB_2_DP
D13
C45
100nF
C47
100nF
D19
D22
NetTie_2
NT3
GND
USB_2 XMOS USB CONNECTOR
H1
H2
H3
H4
H5
H6
FutureProofHomes
Sheet: /Connectors/
File: Connectors.kicad_sch
Title: Satellite1 HAT
Size: A4
Date: 2025-01-31
Rev: rev6
KiCad E.D.A. 9.0.0
Id: 2/9

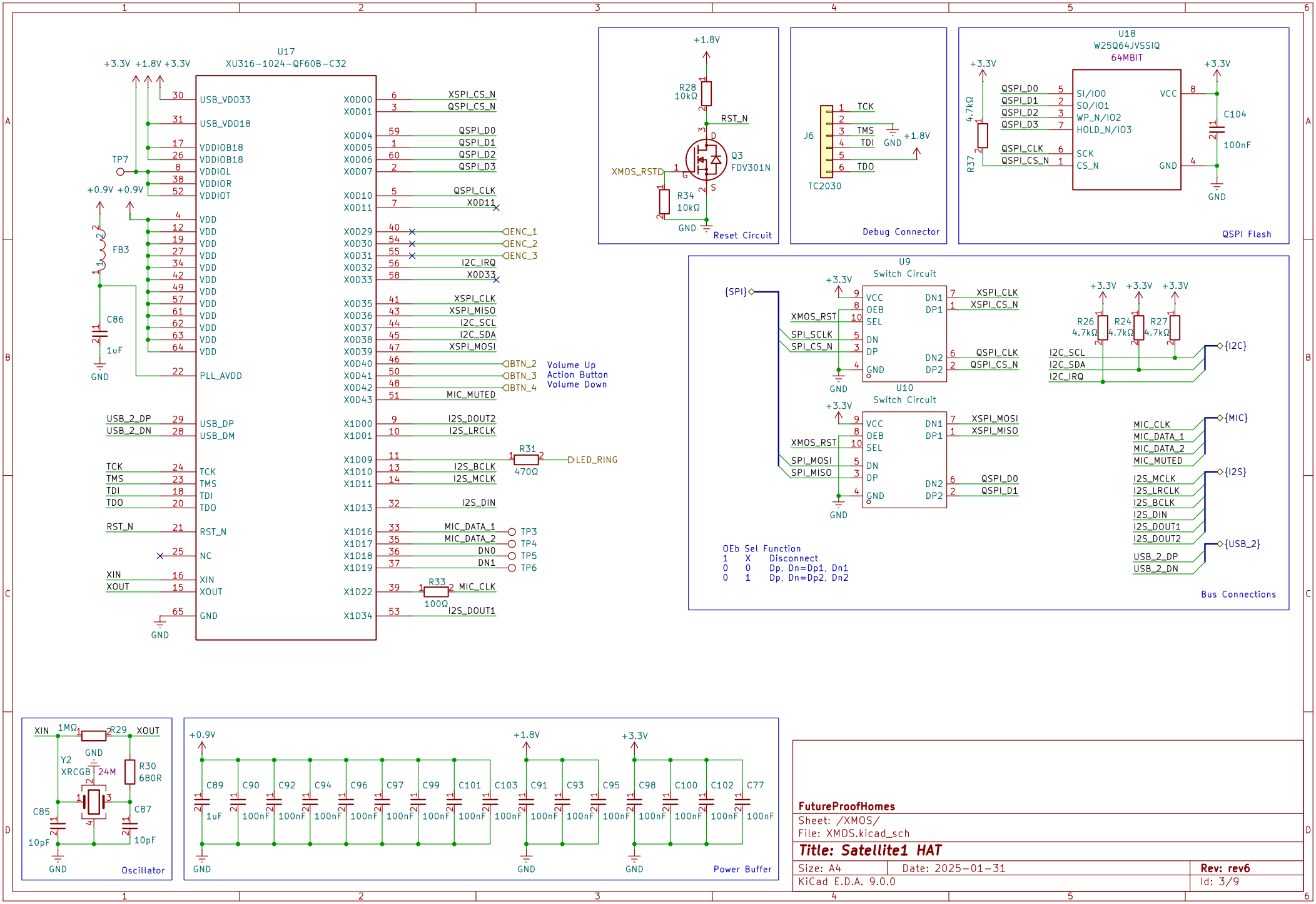
U17
XU316-1024-QF60B-C32
+3.3V +1.8V +3.3V
+0.9V +0.9V
TP7
FB3
C86
1uF
GND
USB_VDD33
USB_VDD18
VDDIOB18
VDDIOB18
VDDIOL
VDDIOR
VDDIOT
VDD
PLL_AVDD
USB_2_DP
USB_2_DN
USB_DP
USB_DM
TCK
TMS
TDI
TDO
RST_N
NC
XIN
XOUT
X0D00 XSPI_CS_N
X0D01 QSPI_CS_N
X0D04 QSPI_D0
X0D05 QSPI_D1
X0D06 QSPI_D2
X0D07 QSPI_D3
X0D10 QSPI_CLK
X0D11 X0D11
X0D29 ENC_1
X0D30 ENC_2
X0D31 ENC_3
X0D32 I2C_IRQ
X0D33 X0D33
X0D35 XSPI_CLK
X0D36 XSPI_MISO
X0D37 I2C_SCL
X0D38 I2C_SDA
X0D39 XSPI_MOSI
X0D40 BTN_2
X0D41 BTN_3
X0D42 BTN_4
X0D43 MIC_MUTED
X1D00 I2S_DOUT2
X1D01 I2S_LRCLK
X1D09 I2S_BCLK
X1D10 I2S_MCLK
X1D11
X1D13 I2S_DIN
X1D16 MIC_DATA_1
X1D17 MIC_DATA_2
X1D18 DN0
X1D19 DN1
X1D22 MIC_CLK
X1D34 I2S_DOUT1
R31 470Ω LED_RING
R33 100Ω
Volume Up
Action Button
Volume Down
+1.8V
R28 10kΩ
RST_N
Q3 FDV301N
XMOS_RST
R34 10kΩ
Reset Circuit
J6
TC2030
TCK
TMS
TDI
TDO
Debug Connector
U18
W25Q64JVSSIQ
64MBIT
QSPI_D0
QSPI_D1
QSPI_D2
QSPI_D3
QSPI_CLK
QSPI_CS_N
SI/IO0
SO/IO1
WP_N/IO2
HOLD_N/IO3
SCK
CS_N
VCC
GND
R37 4.7kΩ
C104 100nF
QSPI Flash
U9
Switch Circuit
U10
Switch Circuit
{SPI}
XMOS_RST
SPI_SCLK
SPI_CS_N
SPI_MOSI
SPI_MISO
VCC
OEB
SEL
DN
DP
GND
DN1
DP1
DN2
DP2
XSPI_CLK
XSPI_CS_N
QSPI_CLK
QSPI_CS_N
XSPI_MOSI
XSPI_MISO
QSPI_D0
QSPI_D1
R26 4.7kΩ
R24 4.7kΩ
R27 4.7kΩ
I2C_SCL
I2C_SDA
I2C_IRQ
{I2C}
MIC_CLK
MIC_DATA_1
MIC_DATA_2
MIC_MUTED
{MIC}
I2S_MCLK
I2S_LRCLK
I2S_BCLK
I2S_DIN
I2S_DOUT1
I2S_DOUT2
{I2S}
USB_2_DP
USB_2_DN
{USB_2}
OEb Sel Function
1 X Disconnect
0 0 Dp, Dn=Dp1, Dn1
0 1 Dp, Dn=Dp2, Dn2
Bus Connections
XIN 1MΩ R29 XOUT
Y2 XRCGB 24M
R30 680R
C85 10pF
C87 10pF
Oscillator
+0.9V
+1.8V
+3.3V
C89 1uF
C90 C92 C94 C96 C97 C99 C101 C103 100nF
C91 C93 C95 C98 C100 C102 C77 100nF
Power Buffer
FutureProofHomes
Sheet: /XMOS/
File: XMOS.kicad_sch
Title: Satellite1 HAT
Size: A4
Date: 2025-01-31
Rev: rev6
KiCad E.D.A. 9.0.0
Id: 3/9

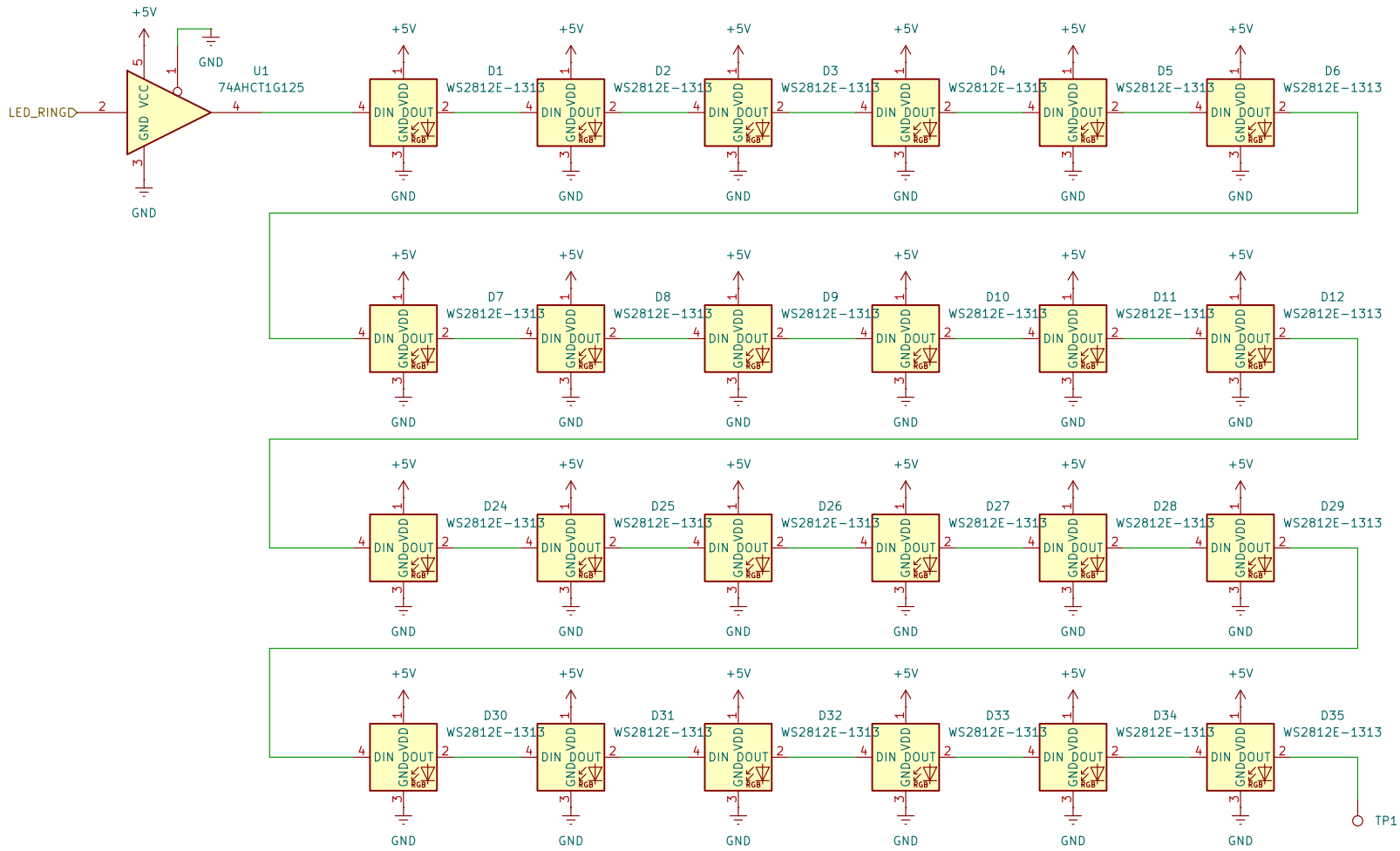

FutureProofHomes

Sheet: /LED/

File: LED.kicad_sch

Title: Satellite1 HAT

Size: A4	Date: 2025-01-31	**Rev: rev6**
KiCad E.D.A. 9.0.0		Id: 4/9

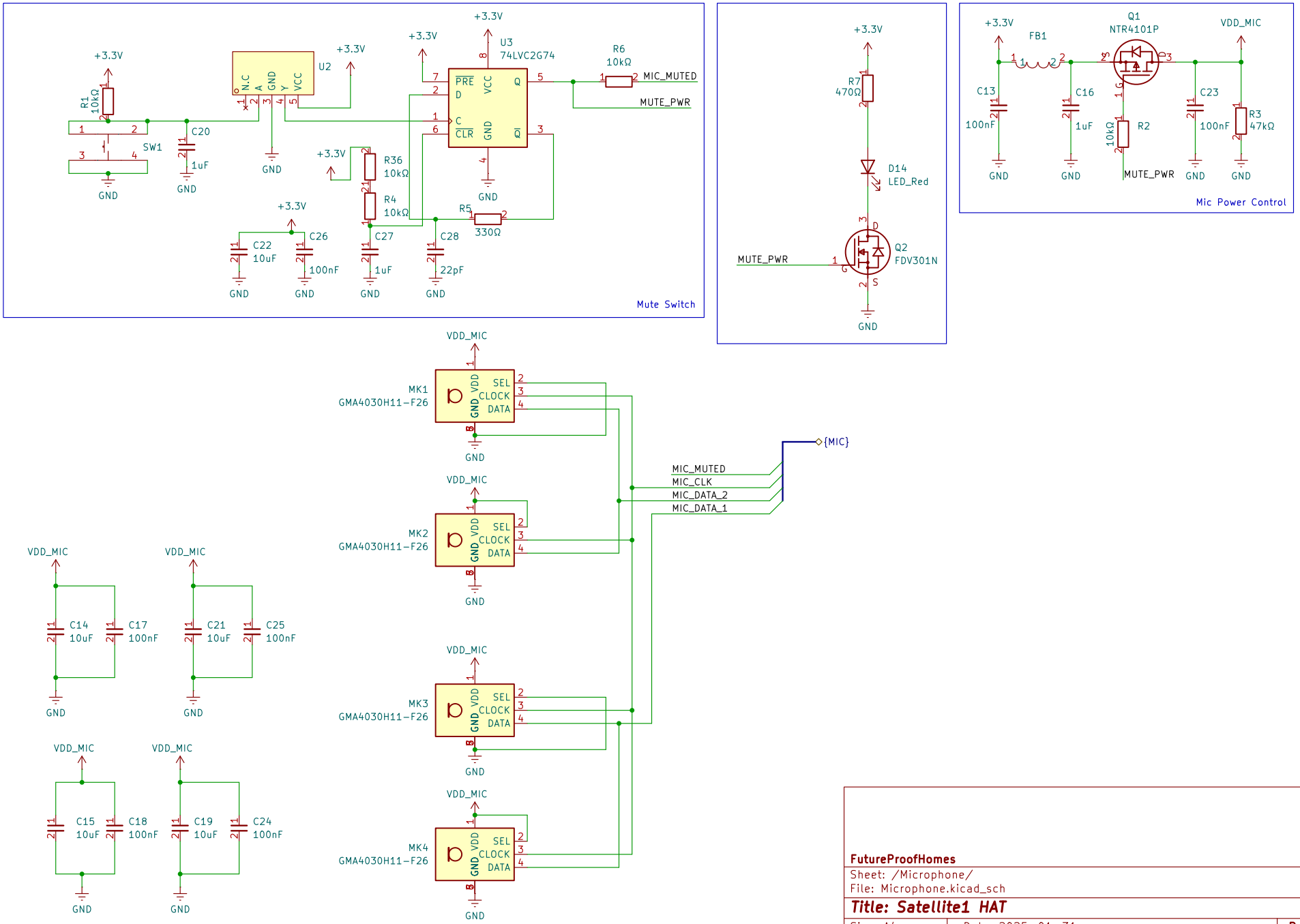

FutureProofHomes

Sheet: /Microphone/
File: Microphone.kicad_sch

Title: Satellite1 HAT

Size: A4	Date: 2025-01-31	**Rev: rev6**
KiCad E.D.A. 9.0.0		Id: 5/9

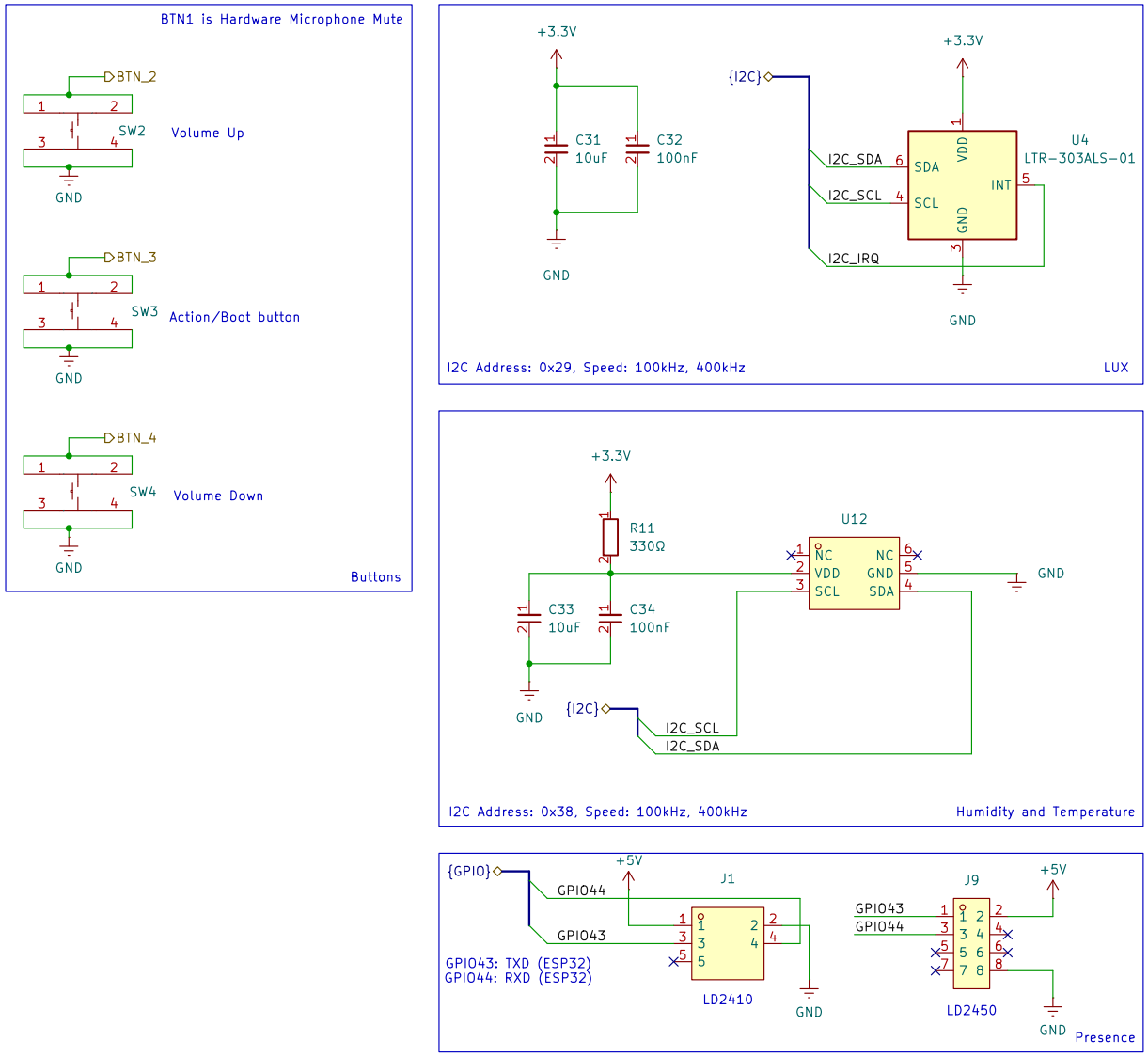

FutureProofHomes

Sheet: /Sensors/
File: Sensors.kicad_sch

Title: Satellite1 HAT

Size: A4	Date: 2025-01-31	**Rev: rev6**
KiCad E.D.A. 9.0.0		Id: 6/9

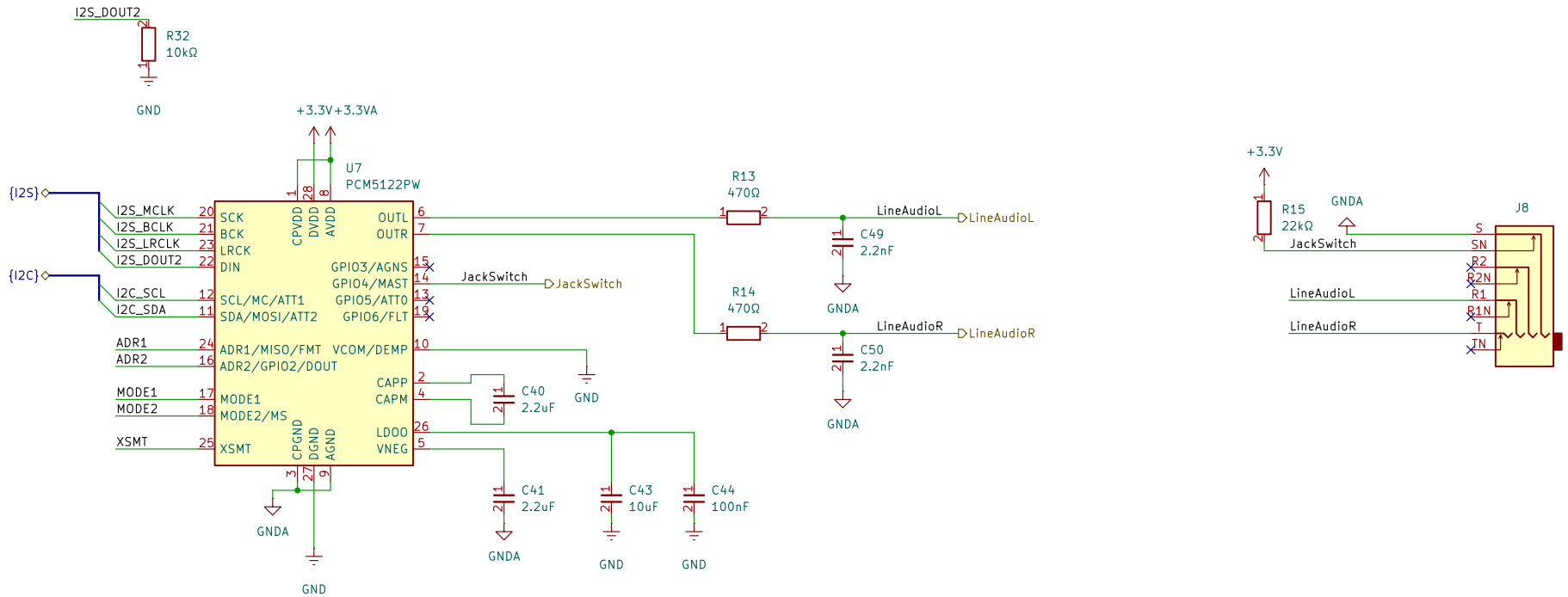

I2C Address: 0x4D, Speed: 100kHz, 400kHz

Address:	Mode control selection pin:		Soft mute control:
ADR1 = Low, ADR2 = Low: 0x4C ADR1 = High, ADR2 = Low: 0x4D ADR1 = Low, ADR2 = High: 0x4E ADR1 = High, ADR2 = High: 0x4F	MODE1 = Low, MODE2 = Low: MODE1 = Low, MODE2 = High: MODE1 = High:	Hardwired mode I2C mode SPI mode	Soft mute (Low) soft un-mute (High)

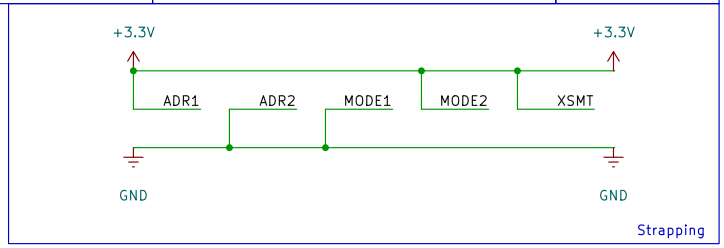

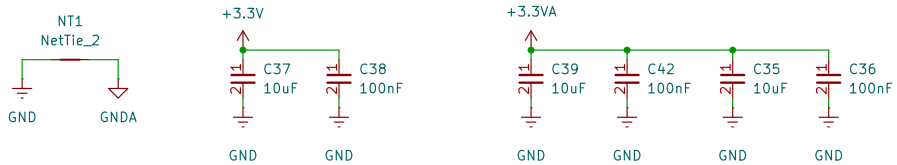

FutureProofHomes

Sheet: /DAC/
File: DAC.kicad_sch

Title: Satellite1 HAT

Size: A4	Date: 2025-01-31	Rev: rev6
KiCad E.D.A. 9.0.0		Id: 8/9

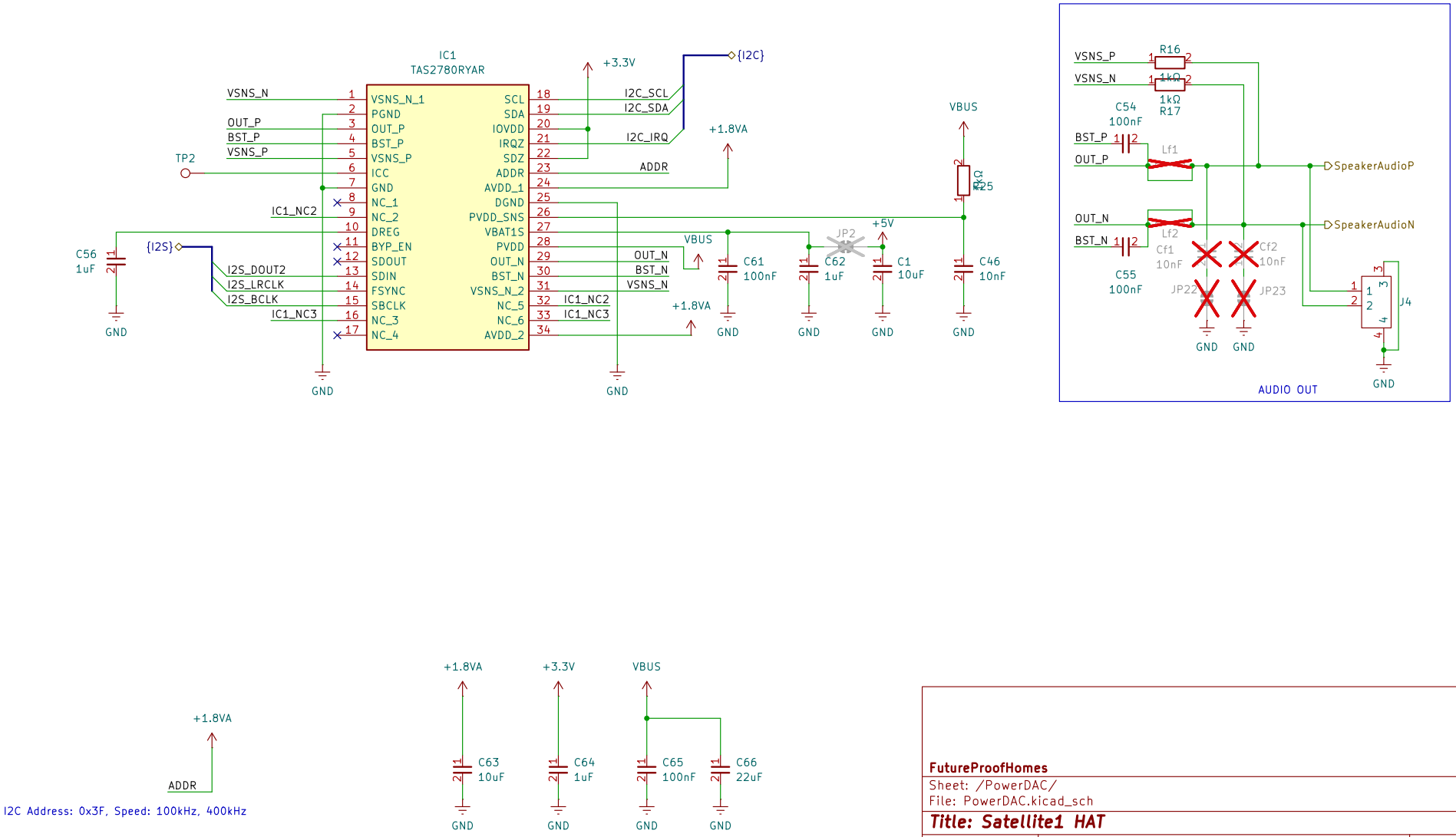

FutureProofHomes

Sheet: /PowerDAC/
File: PowerDAC.kicad_sch

Title: Satellite1 HAT

Size: A4	Date: 2025-01-31	**Rev: rev6**
KiCad E.D.A. 9.0.0		Id: 9/9

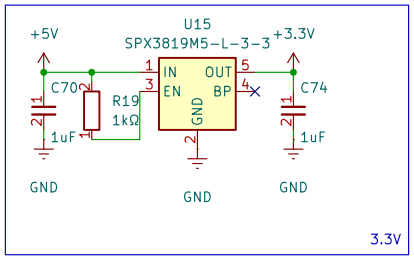

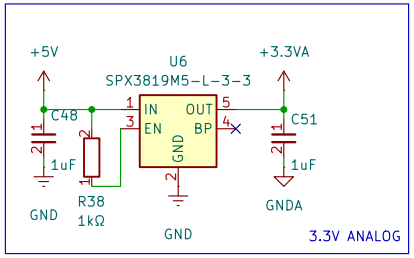

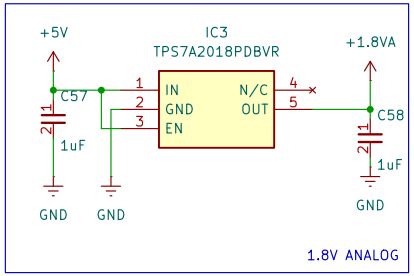

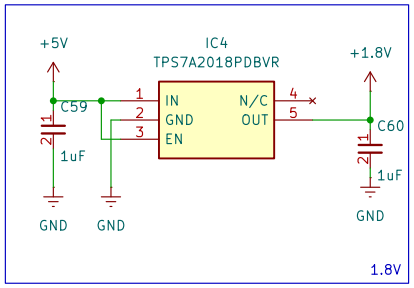

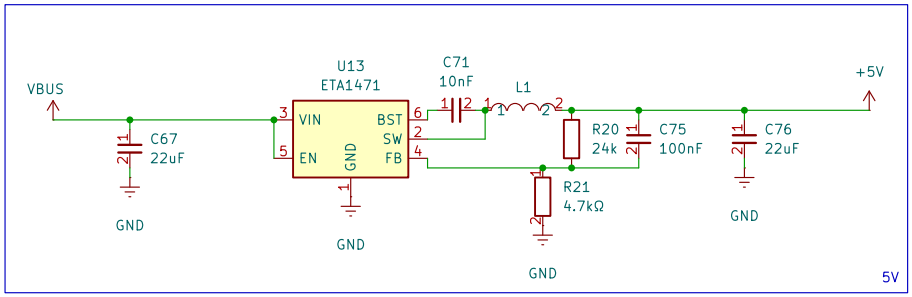

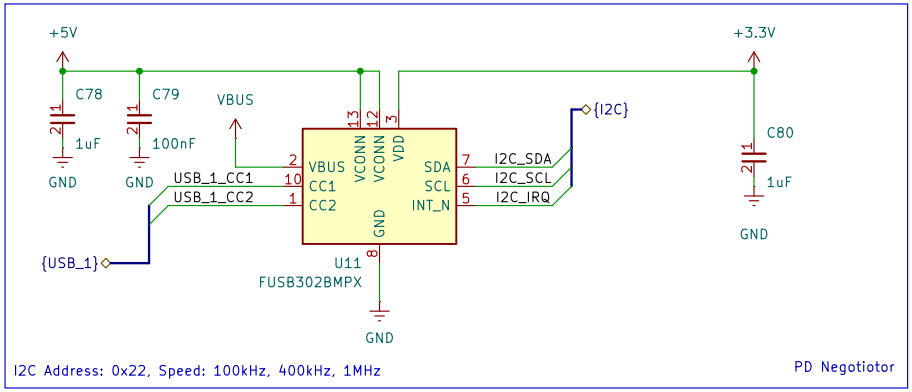

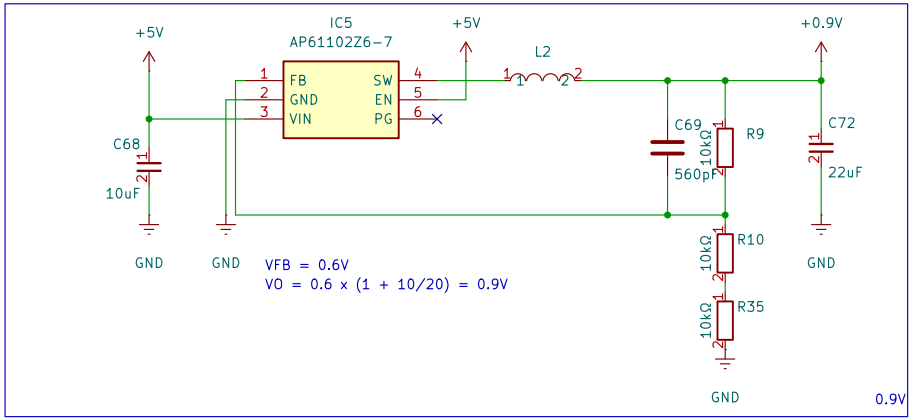

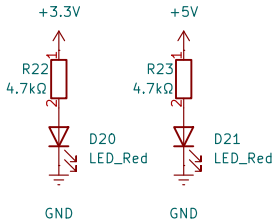

FutureProofHomes

Sheet: /Power/
File: Power.kicad_sch

Title: Satellite1 HAT

Size: A4	Date: 2025-01-31	**Rev: rev6**
KiCad E.D.A. 9.0.0		Id: 10/9