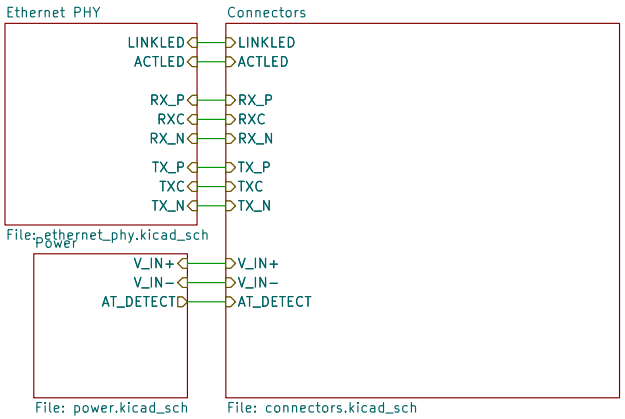

Sheet: /
File: minispeaker-shoe.kicad_sch

Title:

Size: A4	Date:	**Rev:**
KiCad E.D.A. 9.0.0		Id: 1/4

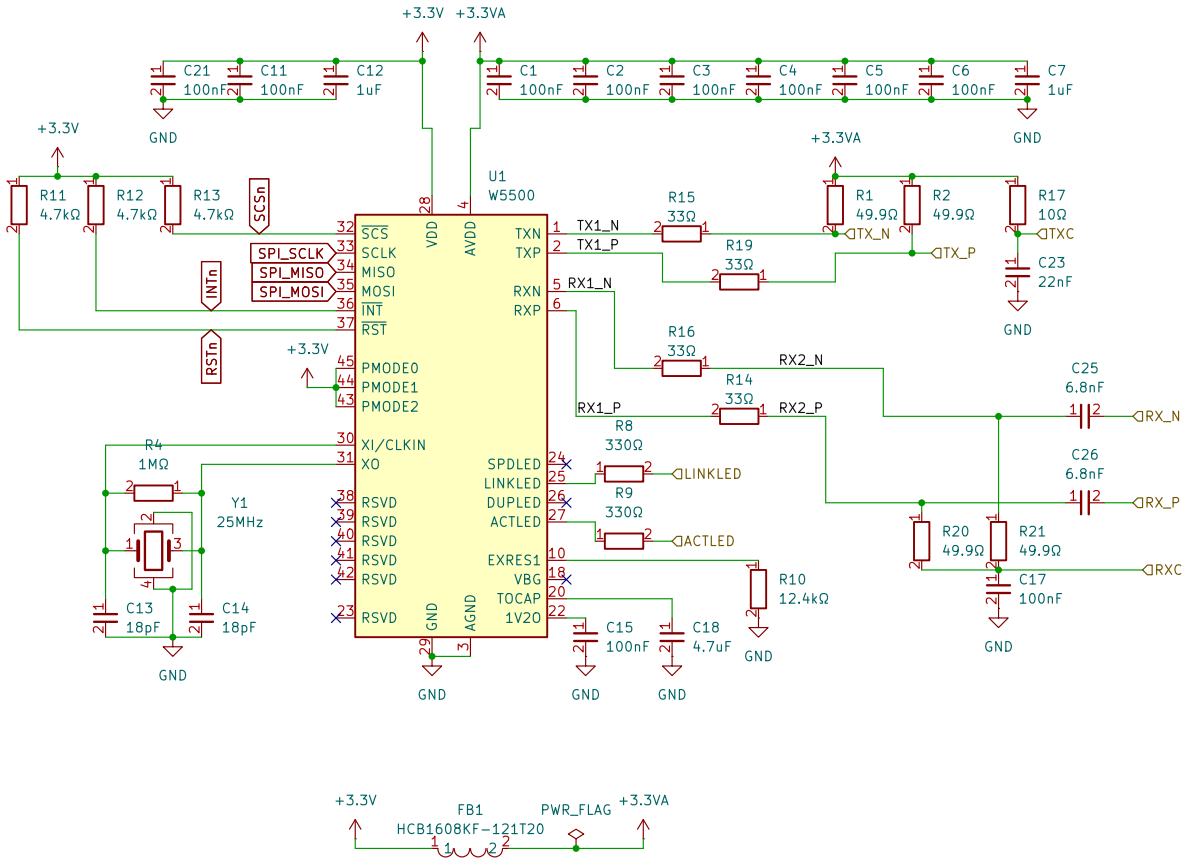

Sheet: /Ethernet PHY/
File: ethernet_phy.kicad_sch

Title:

Size: A4	Date:	Rev:
KiCad E.D.A. 9.0.0		Id: 2/4

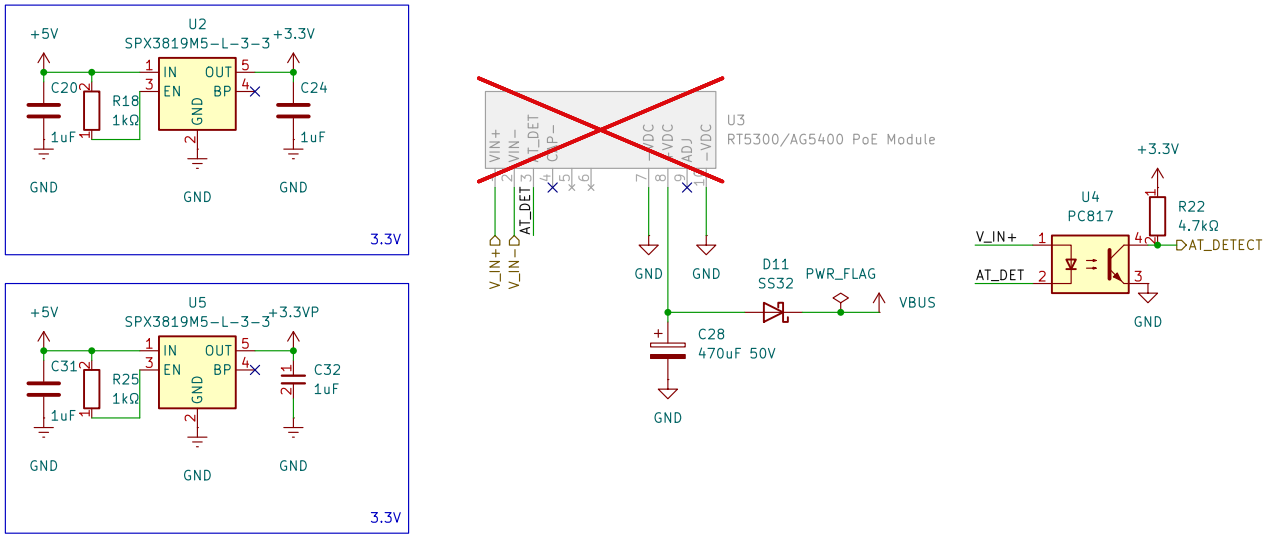

Sheet: /Power/
File: power.kicad_sch

Title:

Size: A4	Date:	Rev:
KiCad E.D.A. 9.0.0		Id: 3/4

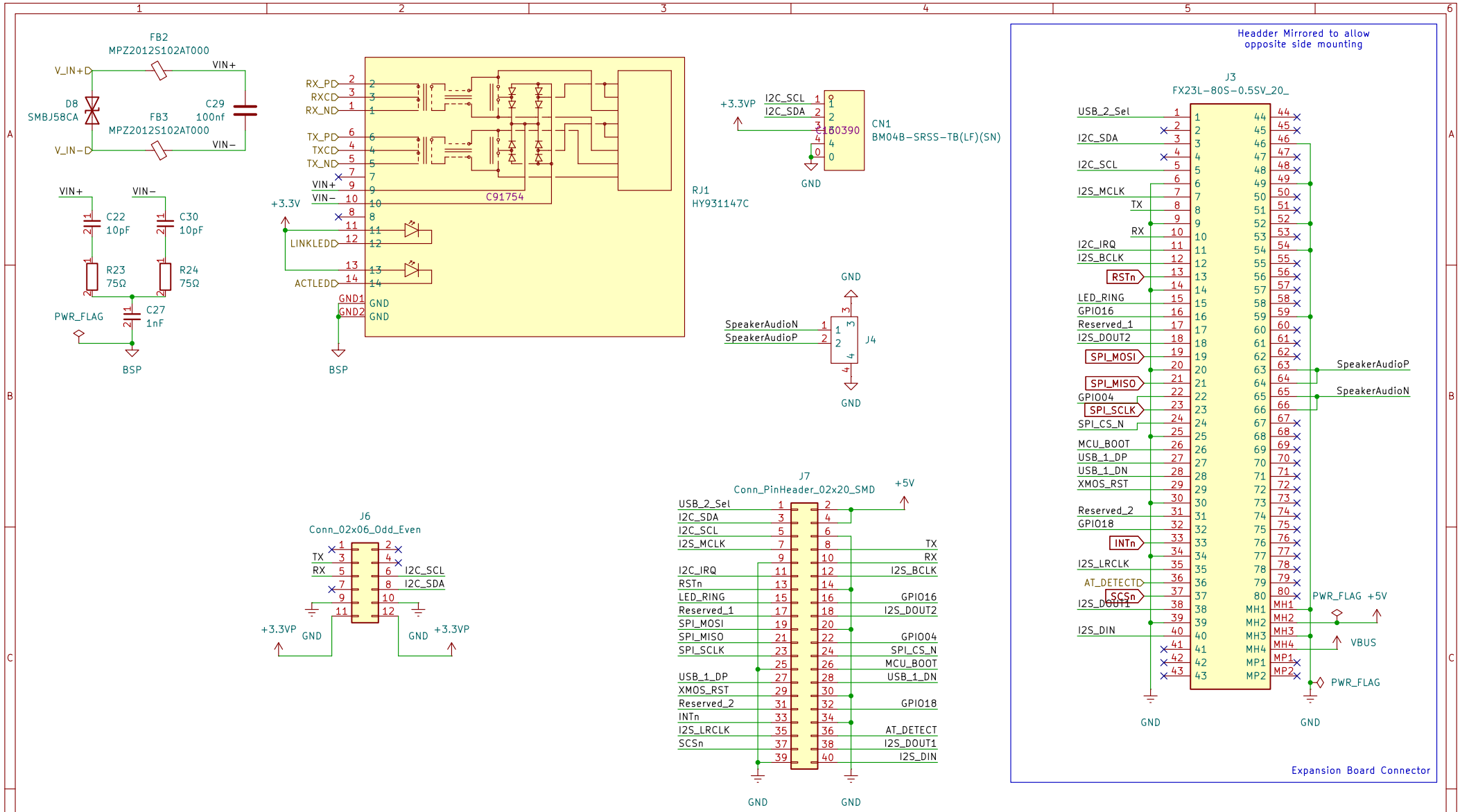

Sheet: /Connectors/
File: connectors.kicad_sch

Title:

Size: A4	Date:	Rev:
KiCad E.D.A. 9.0.0		Id: 4/4