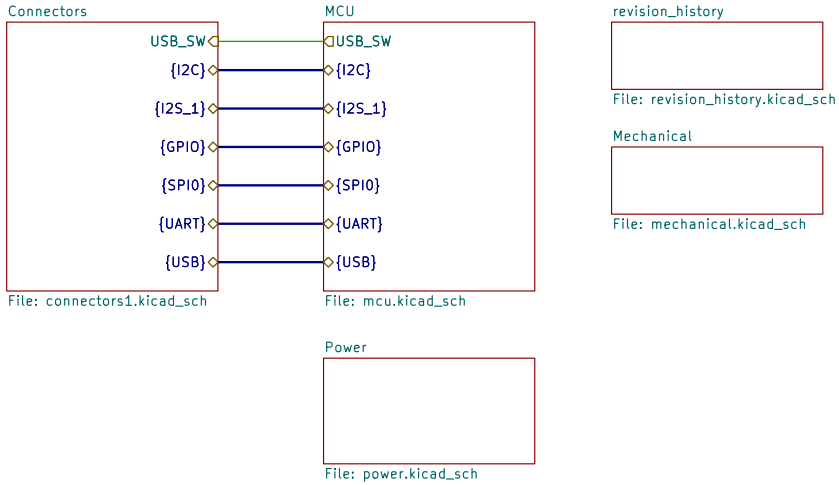

FutureProof HOMES

Sheet: /
File: sat1-core.kicad_sch

Title: Satellite1 Core

Size: A4	Date: 2025-02-24	Rev: rev5
KiCad E.D.A. 9.0.0		Page: 1/6

revision_history

Revision R2025.01.31
1. Updated silkscreen
2. Updated 3D models
3. Set power Flags on schematic

Revision R2024.12.15
1. Updated silkscreen
2. Removed copper infil from under antenna

Revision R2025.02.20
1. Replaced U2 With a 1A 3.3V regulator. TLV1117LV33DCYR
2. Replaced C3 with 100nF
3. Replaced C2 with 10uF
4. Added C10,11,12 for bulk decoupling of 5V and 3.3v Rails
5. Added C13–18 as optional decoupling caps for testing

FutureProof HOMES

Sheet: /revision_history/
File: revision_history.kicad_sch

Title: Satellite1 Core

Size: A4	Date: 2025–02–24	**Rev: rev5**
KiCad E.D.A. 9.0.0		Page: 2/6

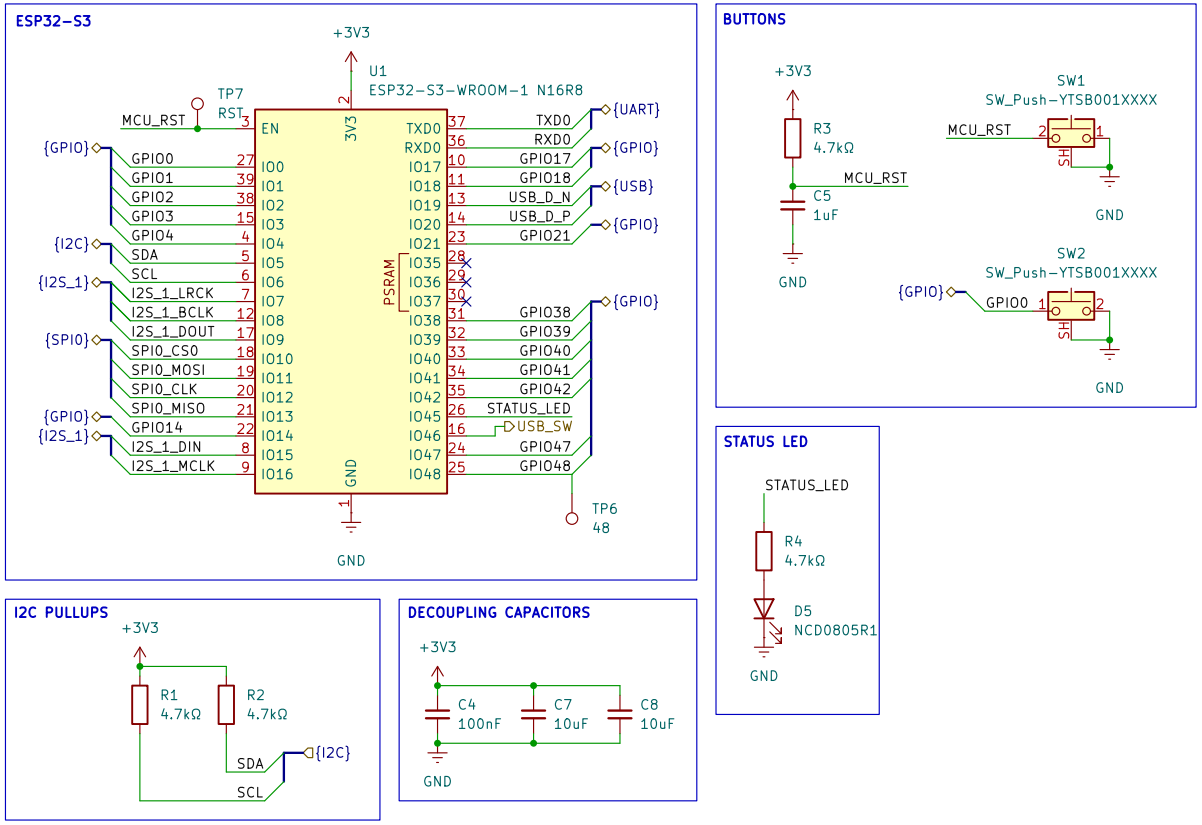

FutureProof HOMES

Sheet: /MCU/
File: mcu.kicad_sch

Title: Satellite1 Core

Size: A4	Date: 2025-02-24	Rev: rev5
KiCad E.D.A. 9.0.0		Page: 3/6

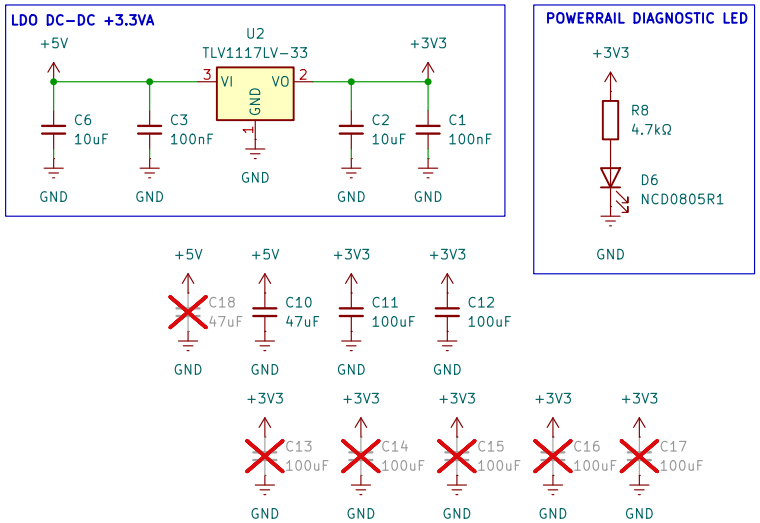

FutureProof HOMES

Sheet: /Power/
File: power.kicad_sch

Title: Satellite1 Core

Size: A4	Date: 2025-02-24	Rev: rev5
KiCad E.D.A. 9.0.0		Page: 4/6

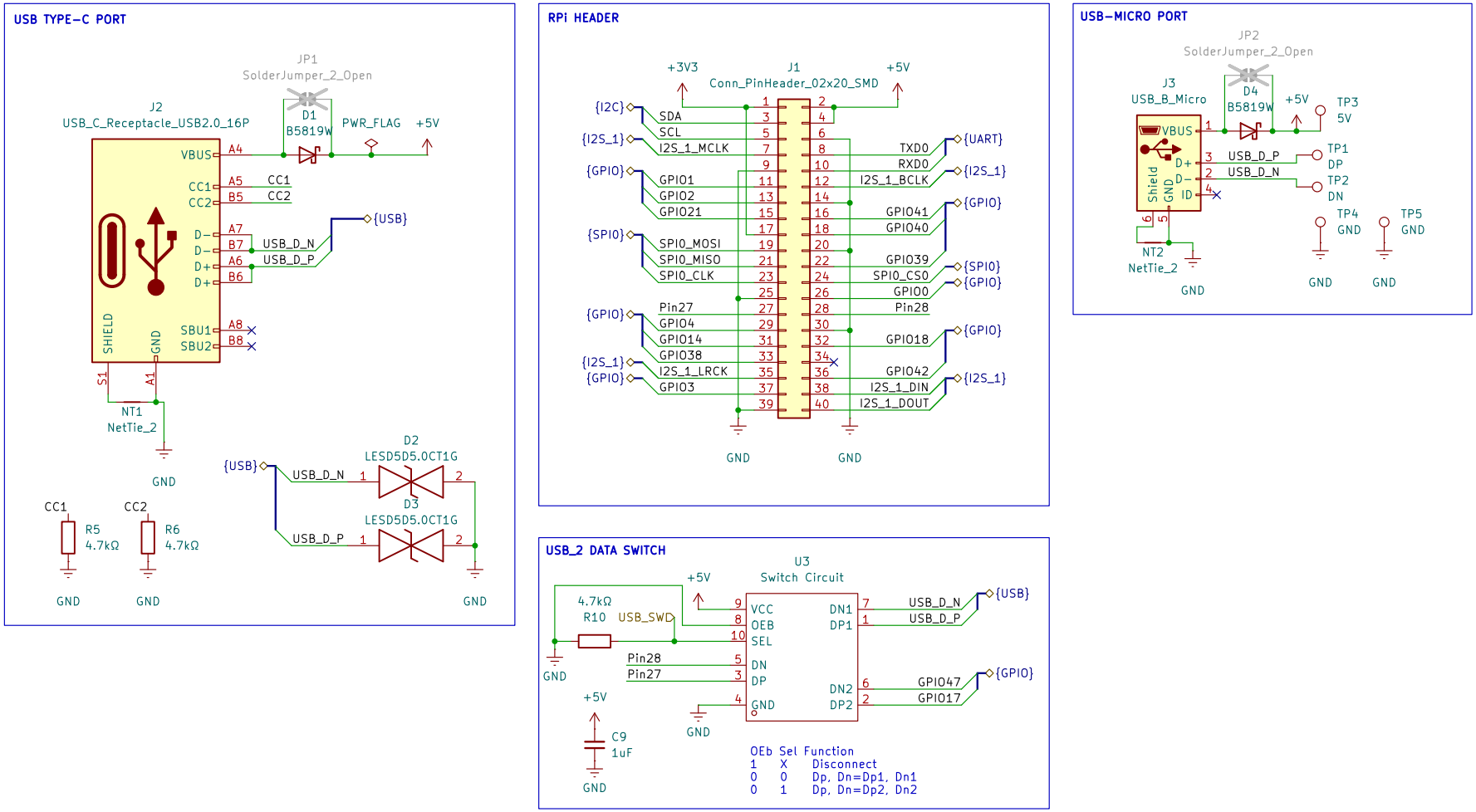

FutureProof HOMES

Sheet: /Connectors/
File: connectors1.kicad_sch

Title: Satellite1 Core

Size: A4	Date: 2025-02-24	Rev: rev5
KiCad E.D.A. 9.0.0		Page: 5/6

PCB MOUNTING HOLES

H1
MountingHole
H2
MountingHole
H3
MountingHole
H4
MountingHole

FutureProof HOMES

Sheet: /Mechanical/
File: mechanical.kicad_sch

Title: Satellite1 Core

Size: A4	Date: 2025-02-24	**Rev: rev5**
KiCad E.D.A. 9.0.0		Page: 6/6