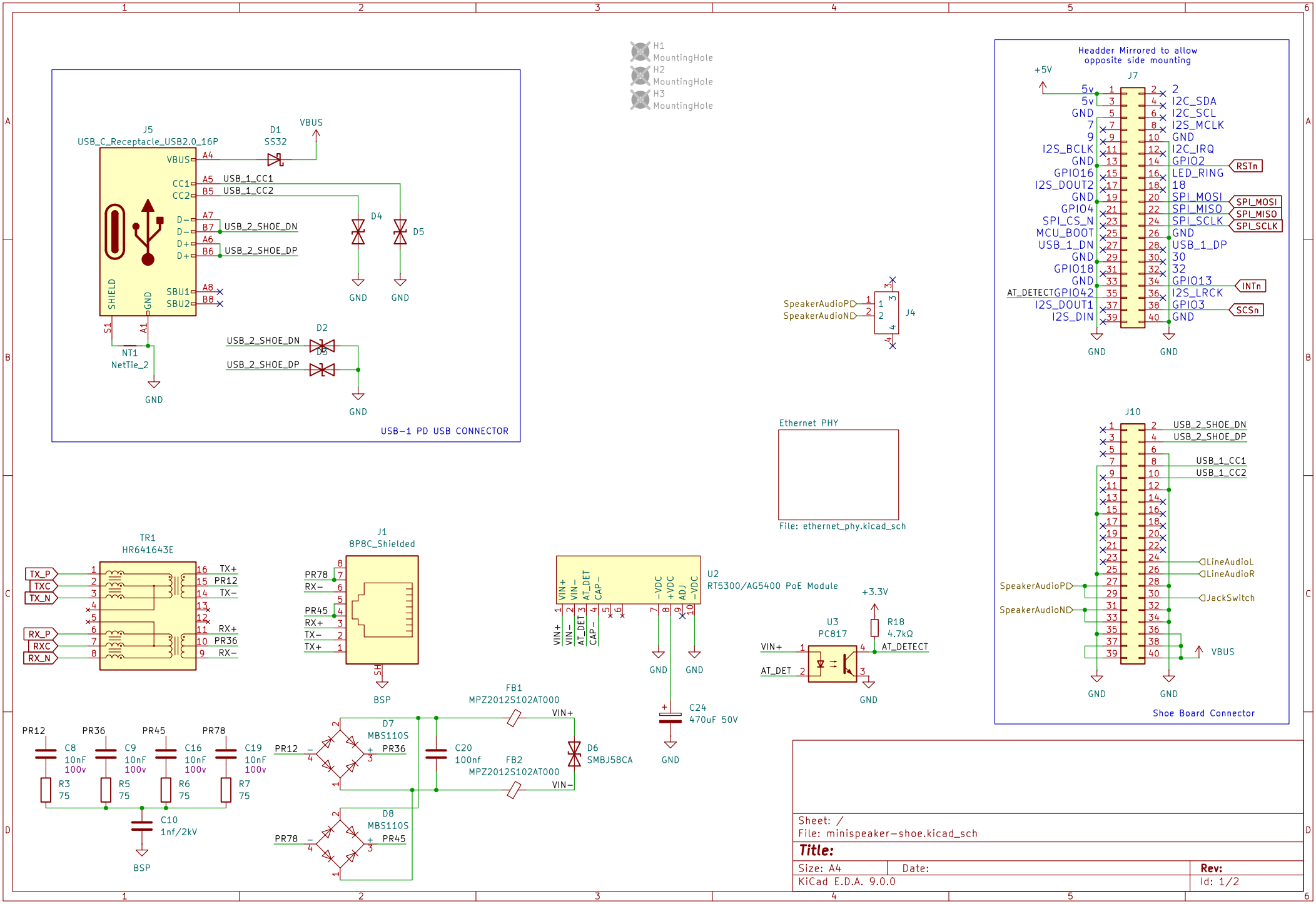

Sheet: /
File: minispeaker−shoe.kicad_sch

Title:

Size: A4	Date:	Rev:
KiCad E.D.A. 9.0.0		Id: 1/2

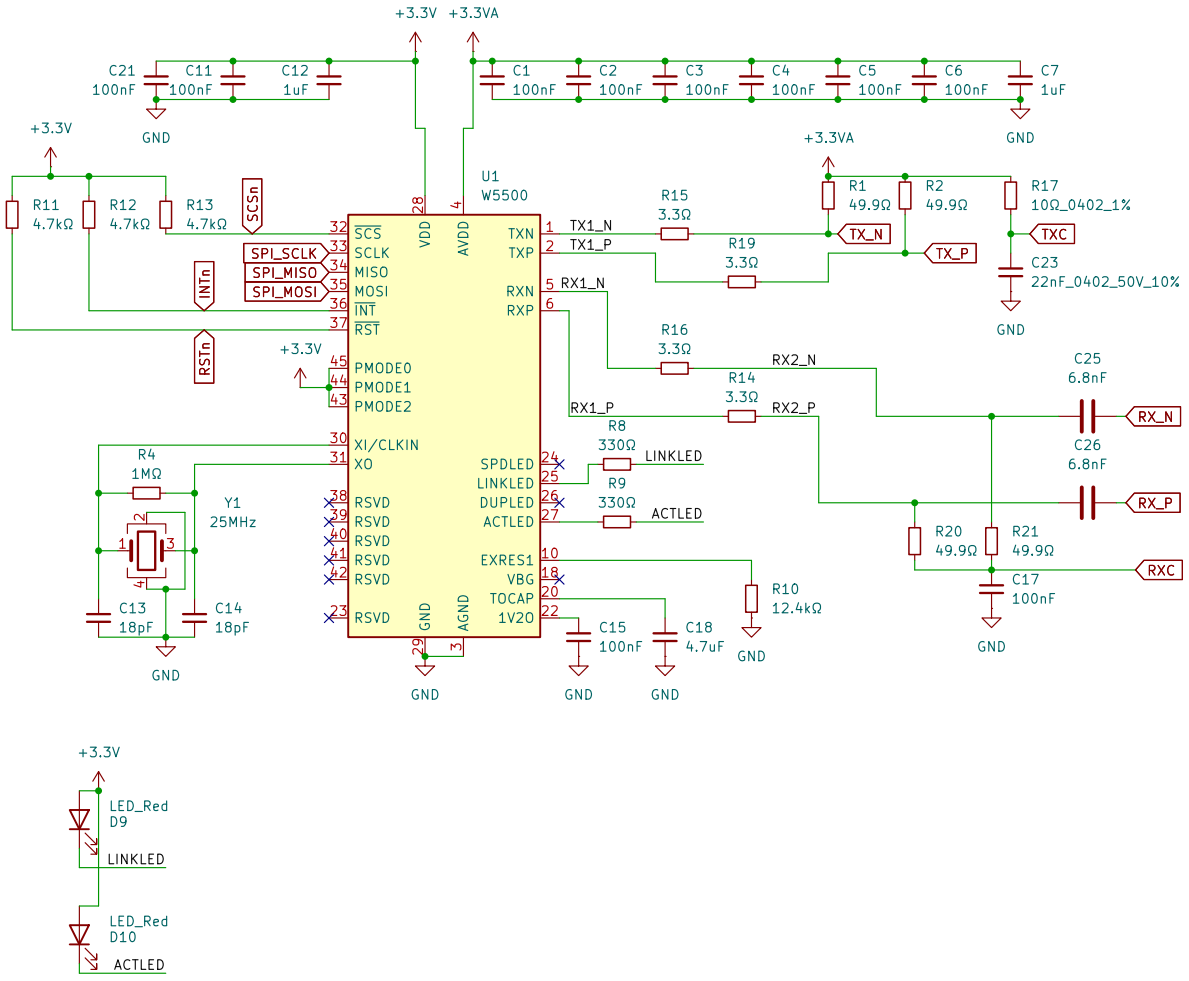

Sheet: /Ethernet PHY/
File: ethernet_phy.kicad_sch

Title:

Size: A4	Date:	Rev:
KiCad E.D.A. 9.0.0		Id: 2/2