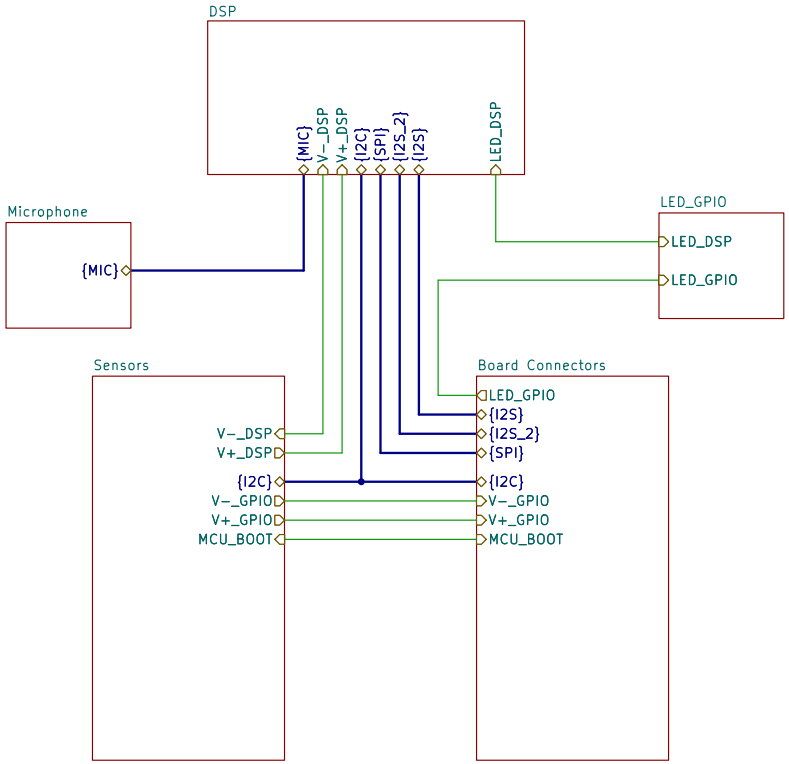

PowerRegulation

Future Proof Homes

Sheet: /
File: Hat.kicad_sch

Title: Satellite 1 HAT

Size: A4	Date: 2024-08-02	**Rev: rev2**
KiCad E.D.A. 9.0.0		Id: 1/7

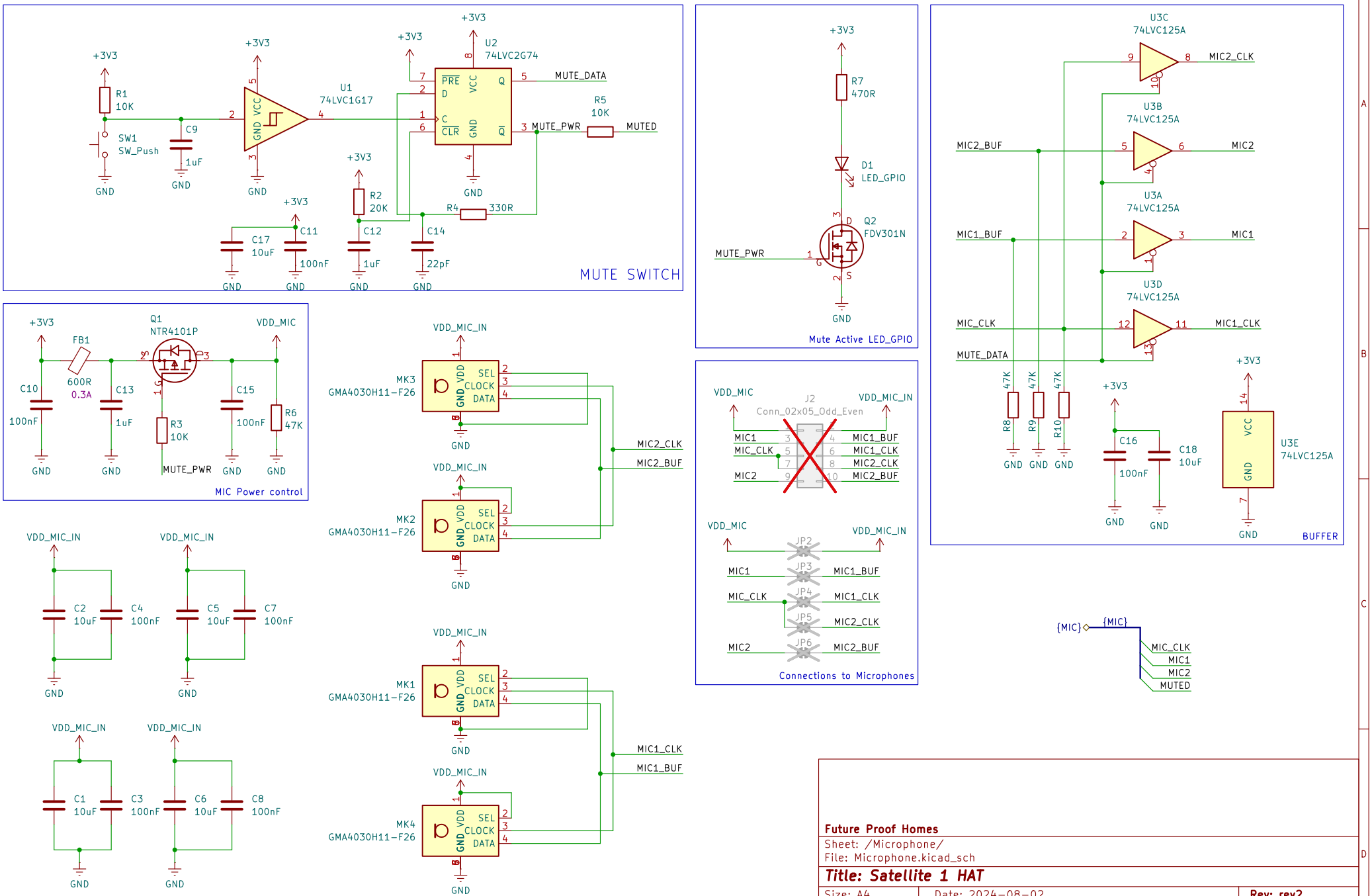

Future Proof Homes

Sheet: /Microphone/
File: Microphone.kicad_sch

Title: Satellite 1 HAT

Size: A4	Date: 2024-08-02	**Rev: rev2**
KiCad E.D.A. 9.0.0		Id: 2/7

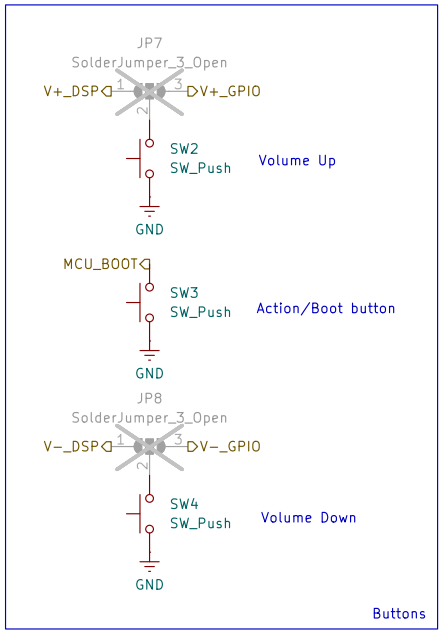

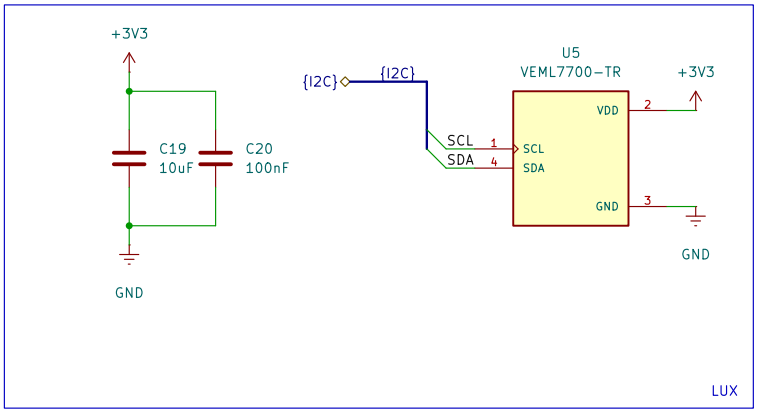

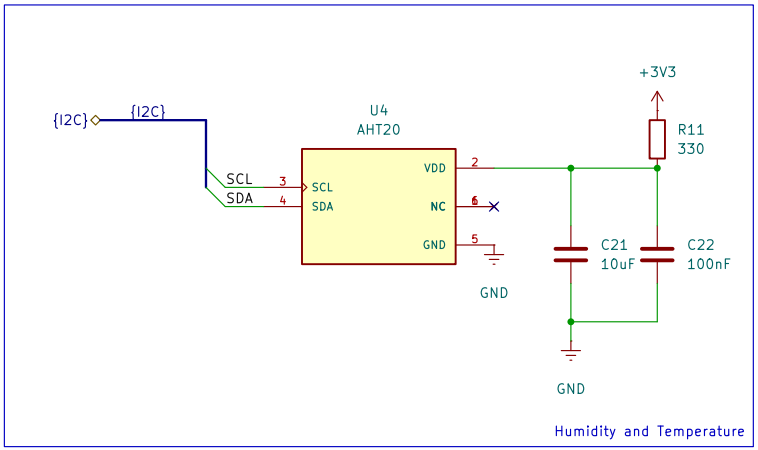

Future Proof Homes

Sheet: /Sensors/
File: Sensors.kicad_sch

Title: Satellite 1 HAT

Size: A4	Date: 2024-08-02	**Rev: rev2**
KiCad E.D.A. 9.0.0		Id: 3/7

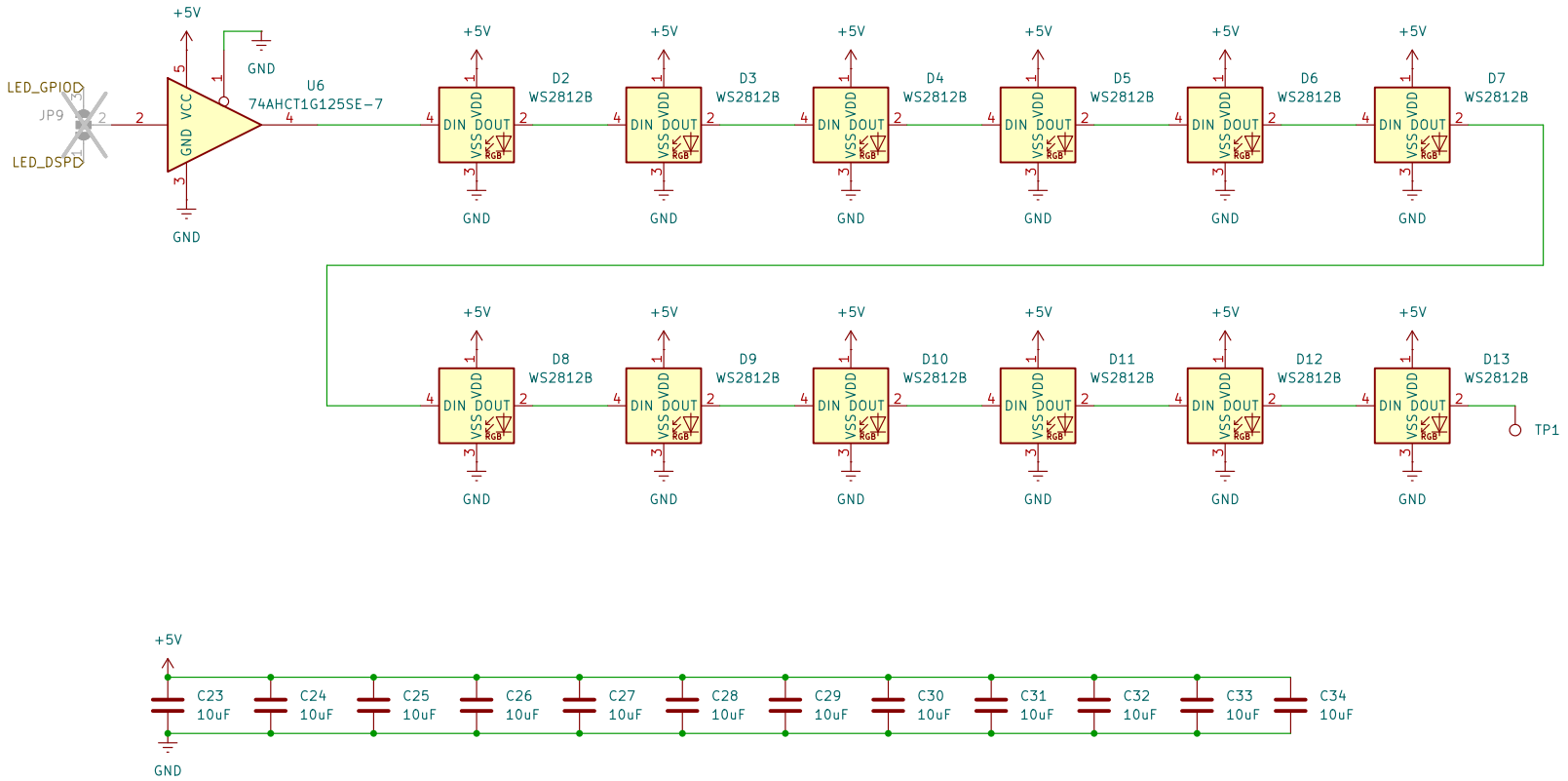

Future Proof Homes

Sheet: /LED_GPIO/
File: LED.kicad_sch

Title: Satellite 1 HAT

Size: A4	Date: 2024-08-02	**Rev: rev2**
KiCad E.D.A. 9.0.0		Id: 4/7

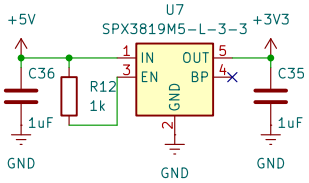

Future Proof Homes

Sheet: /PowerRegulation/
File: PowerRegulation.kicad_sch

Title: Satellite 1 HAT

Size: A4	Date: 2024-08-02	**Rev: rev2**
KiCad E.D.A. 9.0.0		Id: 5/7

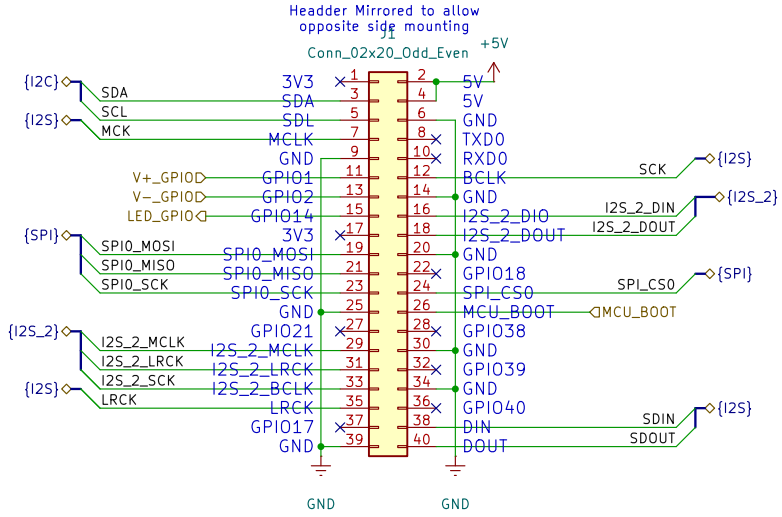

Future Proof Homes

Sheet: /Board Connectors/
File: Board Connectors.kicad_sch

Title: Satellite 1 HAT

Size: A4	Date: 2024-08-02	**Rev: rev2**
KiCad E.D.A. 9.0.0		Id: 6/7

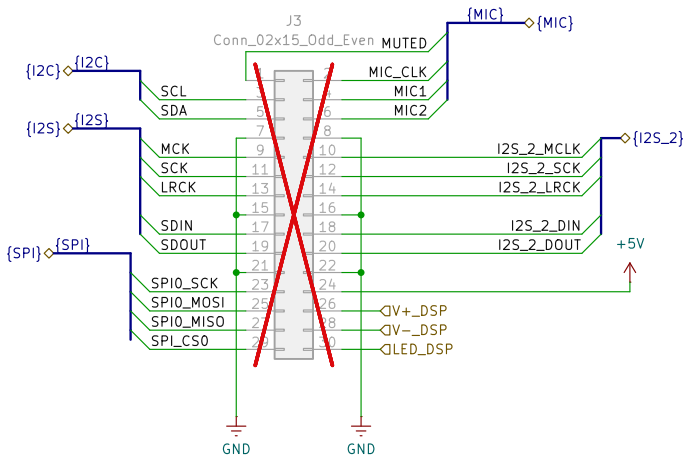

Signals broken out to header,
to allow for development and testing
of required inter chip connections

Future Proof Homes

Sheet: /DSP/
File: DSP.kicad_sch

Title: Satellite 1 HAT

Size: A4	Date: 2024-08-02	**Rev: rev2**
KiCad E.D.A. 9.0.0		Id: 7/7