FutureProofHomes – Satellite1 HAT rev3

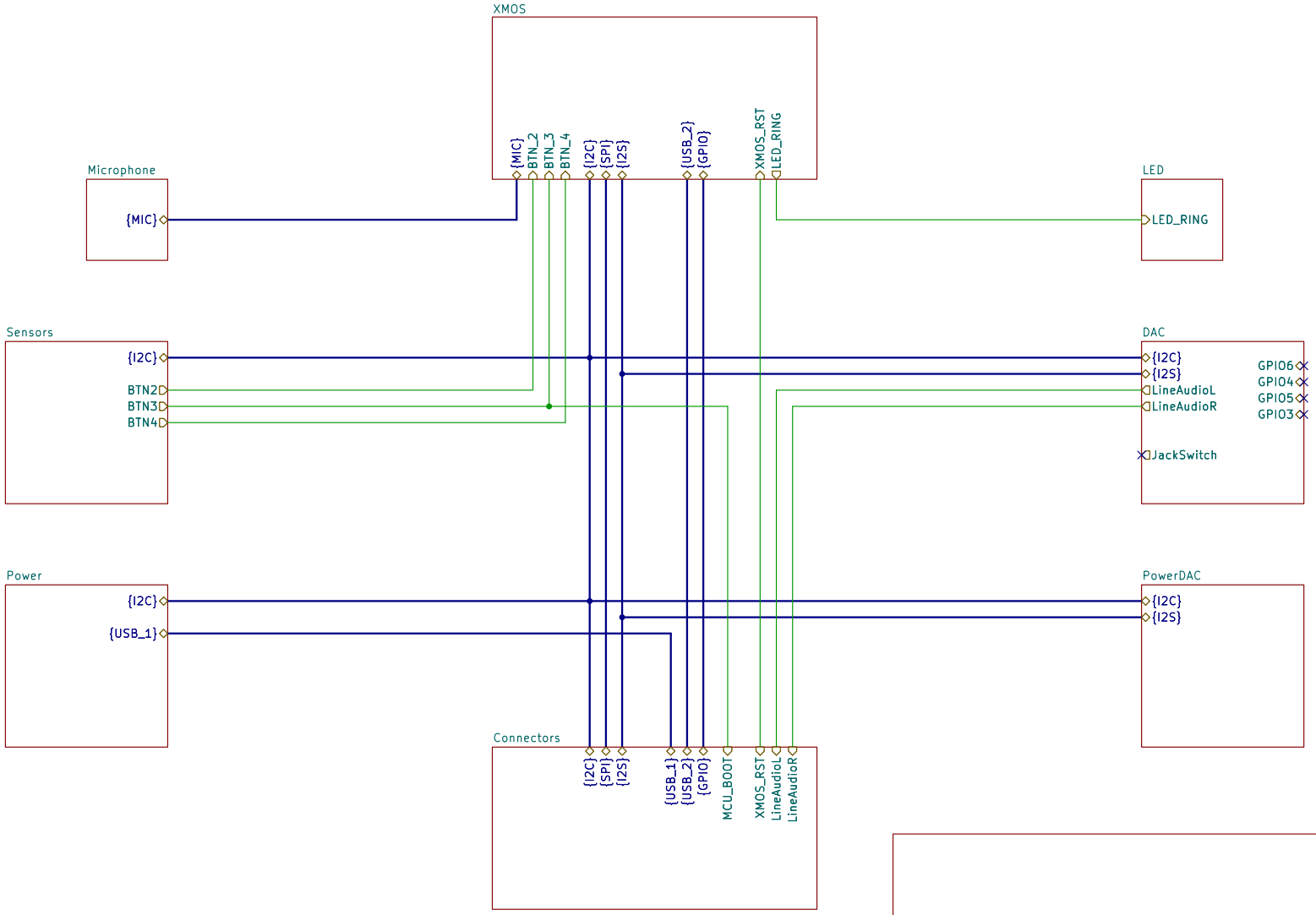

FutureProofHomes

Sheet: /

File: sat1-hat.kicad_sch

Title: Satellite1 HAT

Size: A4	Date: 2024-09-06	**Rev: rev3**
KiCad E.D.A. 9.0.0		Id: 1/9

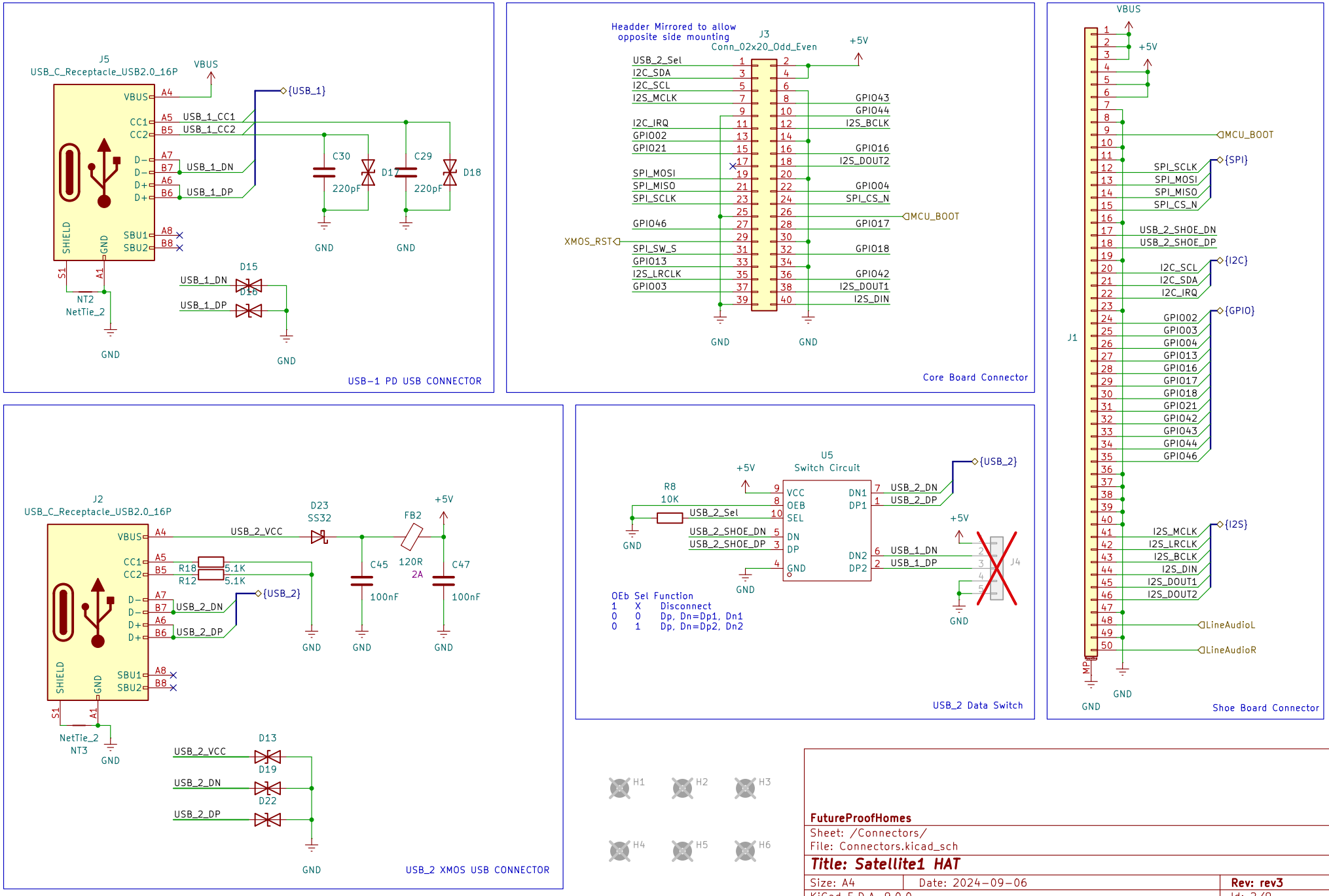
USB-1 PD USB CONNECTOR
J5
USB_C_Receptacle_USB2.0_16P
VBUS
{USB_1}
USB_1_CC1
USB_1_CC2
USB_1_DN
USB_1_DP
C30
220pF
C29
220pF
D17
D18
D15
D16
NT2
NetTie_2
GND
Core Board Connector
Headder Mirrored to allow opposite side mounting
J3
Conn_02x20_Odd_Even
+5V
USB_2_Sel
I2C_SDA
I2C_SCL
I2S_MCLK
I2C_IRQ
GPIO02
GPIO21
SPI_MOSI
SPI_MISO
SPI_SCLK
GPIO46
XMOS_RST
SPI_SW_S
GPIO13
I2S_LRCLK
GPIO03
GPIO43
GPIO44
I2S_BCLK
GPIO16
I2S_DOUT2
GPIO04
SPI_CS_N
MCU_BOOT
GPIO17
GPIO18
GPIO42
I2S_DOUT1
I2S_DIN
USB_2 Data Switch
U5
Switch Circuit
R8
10K
VCC
OEB
SEL
DN
DP
GND
DN1
DP1
DN2
DP2
USB_2_DN
USB_2_DP
USB_1_DN
USB_1_DP
USB_2_SHOE_DN
USB_2_SHOE_DP
{USB_2}
J4
OEb Sel Function
1 X Disconnect
0 0 Dp, Dn=Dp1, Dn1
0 1 Dp, Dn=Dp2, Dn2
Shoe Board Connector
J1
MCU_BOOT
{SPI}
SPI_SCLK
SPI_MOSI
SPI_MISO
SPI_CS_N
{I2C}
{GPIO}
{I2S}
LineAudioL
LineAudioR
USB_2 XMOS USB CONNECTOR
J2
USB_C_Receptacle_USB2.0_16P
USB_2_VCC
D23
SS32
FB2
120R
2A
R18
R12
5.1K
C45
100nF
C47
100nF
NetTie_2
NT3
D13
D19
D22
H1
H2
H3
H4
H5
H6
FutureProofHomes
Sheet: /Connectors/
File: Connectors.kicad_sch
Title: Satellite1 HAT
Size: A4
Date: 2024-09-06
Rev: rev3
KiCad E.D.A. 9.0.0
Id: 2/9

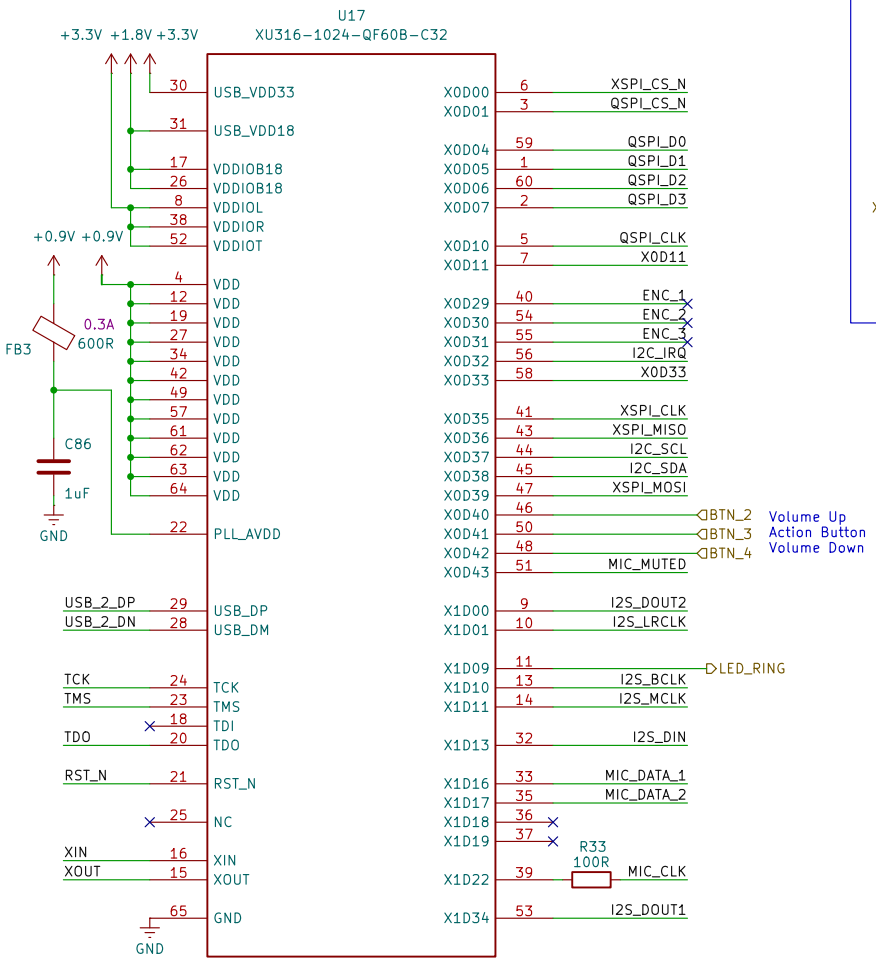

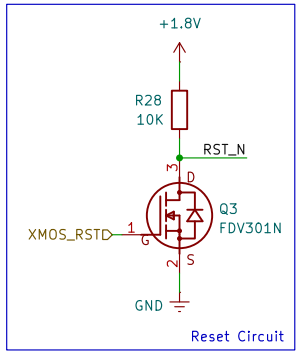

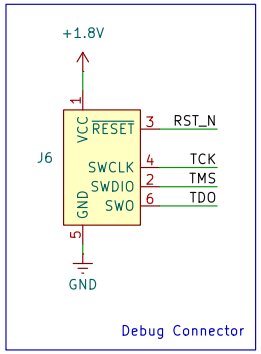

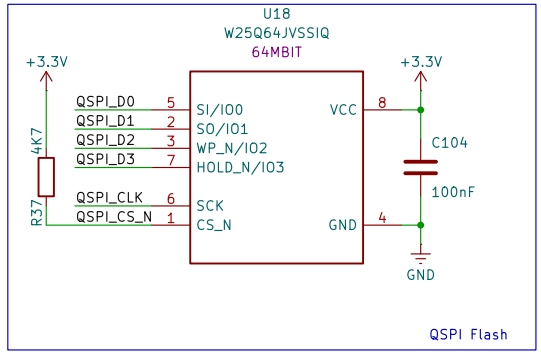

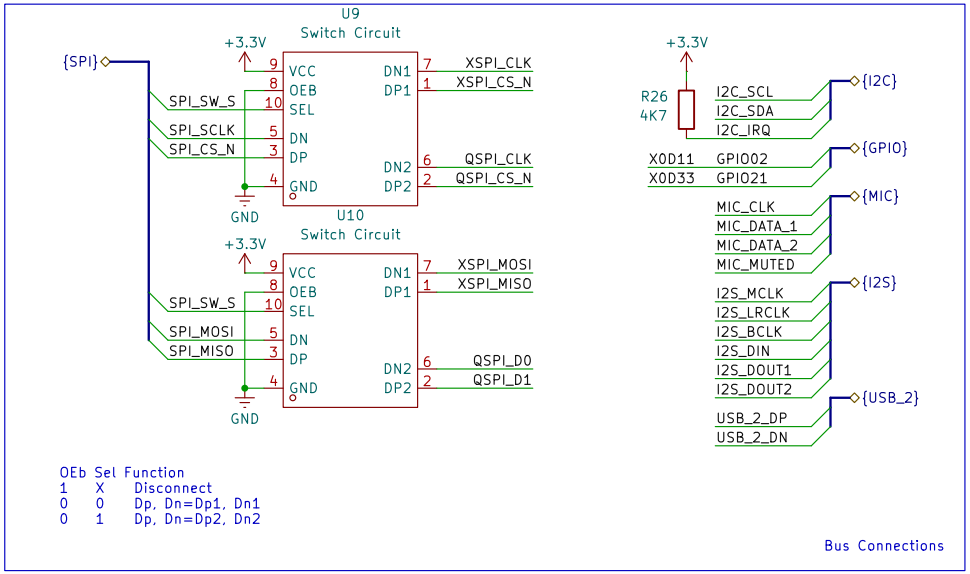

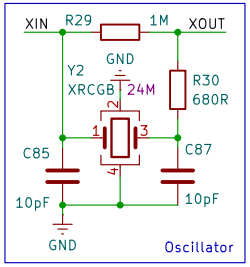

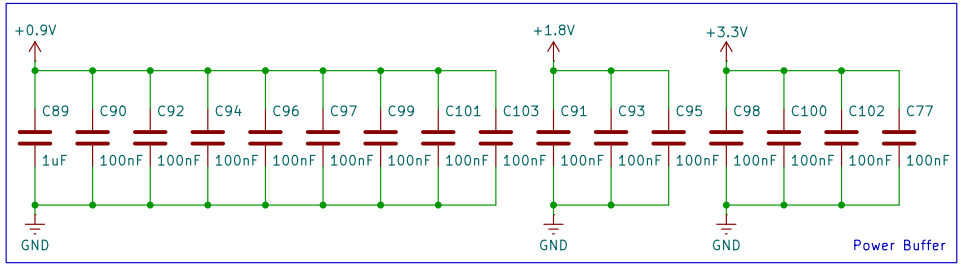

FutureProofHomes

Sheet: /XMOS/
File: XMOS.kicad_sch

Title: Satellite1 HAT

Size: A4	Date: 2024-09-06	Rev: rev3
KiCad E.D.A. 9.0.0		Id: 3/9

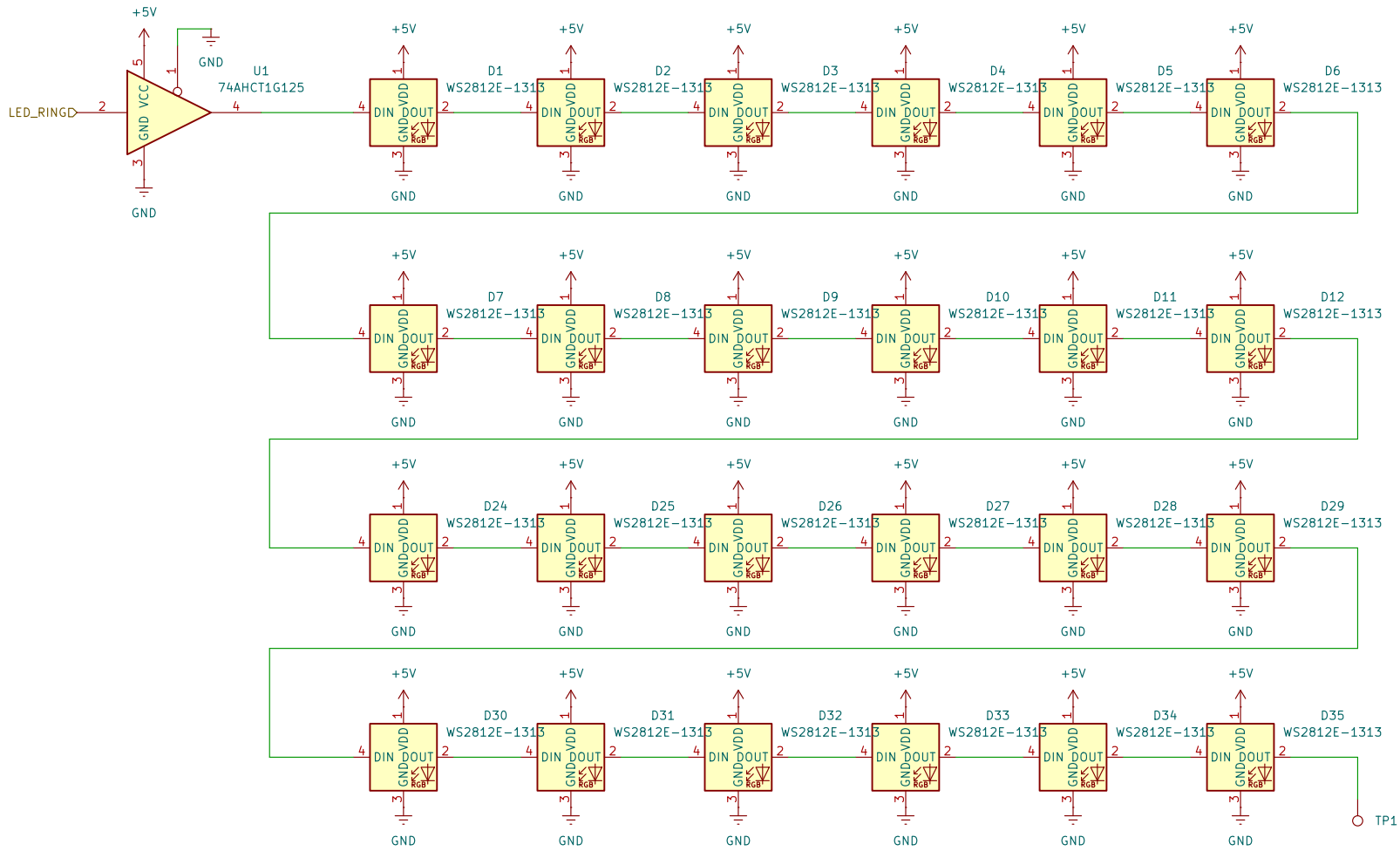

FutureProofHomes

Sheet: /LED/

File: LED.kicad_sch

Title: Satellite1 HAT

Size: A4	Date: 2024-09-06	**Rev: rev3**
KiCad E.D.A. 9.0.0		Id: 4/9

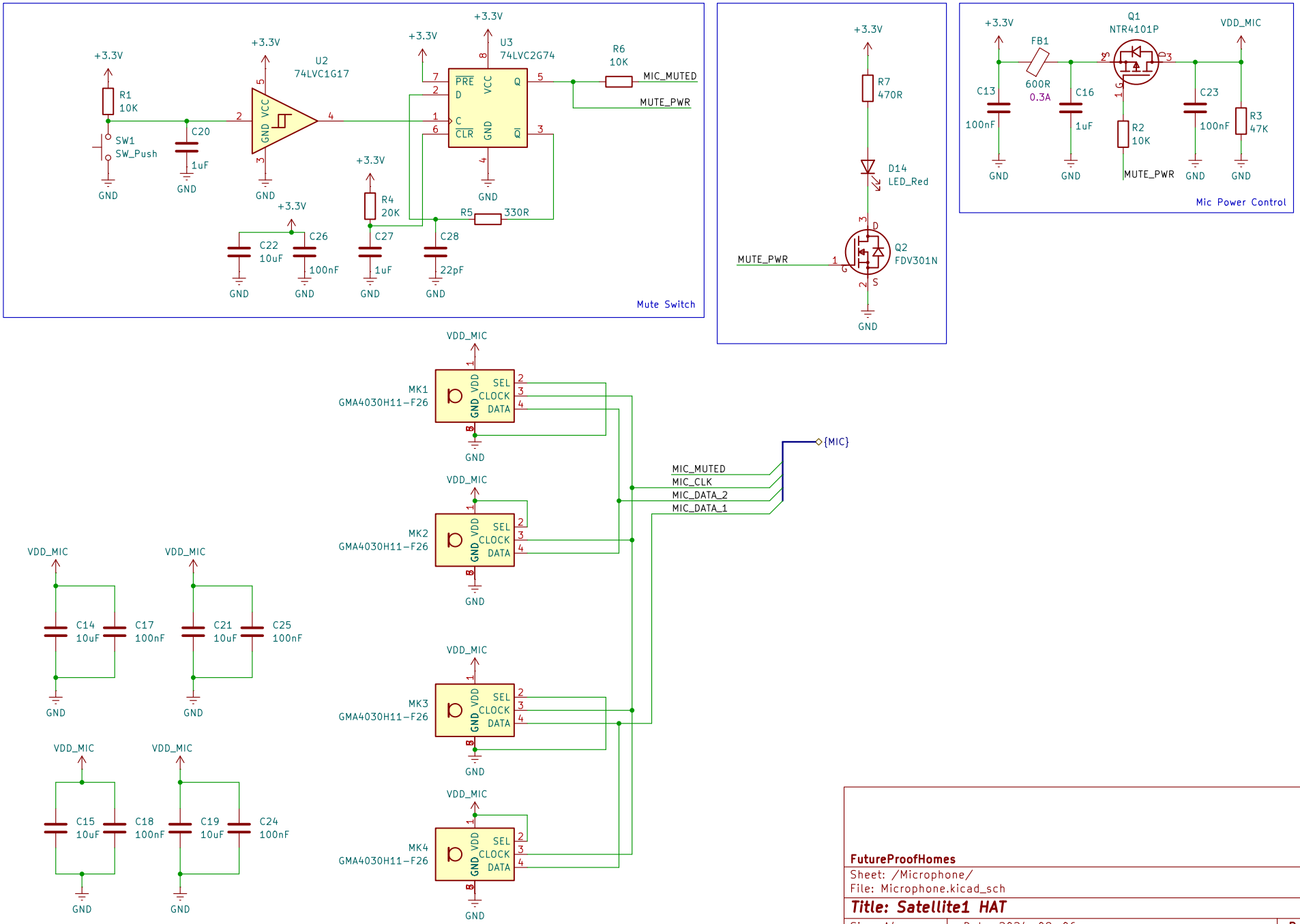

FutureProofHomes

Sheet: /Microphone/

File: Microphone.kicad_sch

Title: Satellite1 HAT

Size: A4	Date: 2024-09-06	**Rev: rev3**
KiCad E.D.A. 9.0.0		Id: 5/9

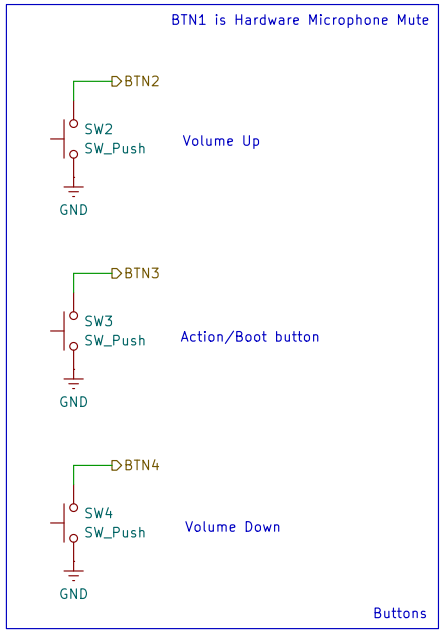

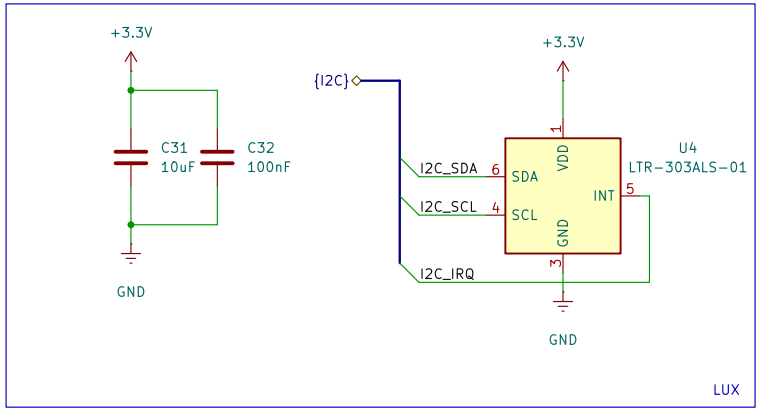

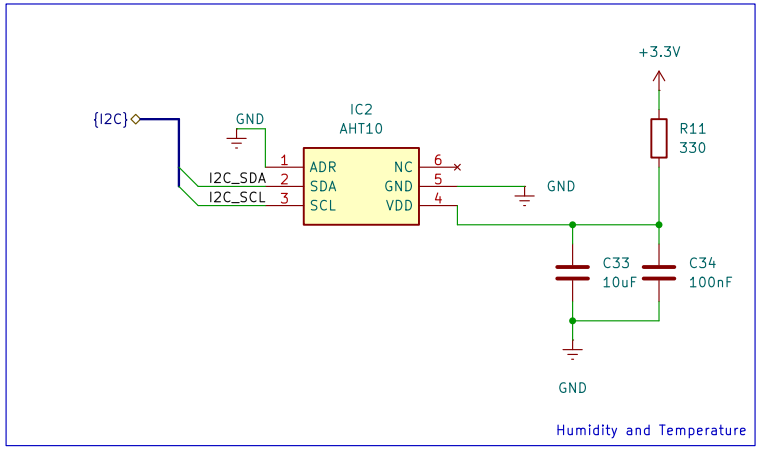

FutureProofHomes

Sheet: /Sensors/
File: Sensors.kicad_sch

Title: Satellite1 HAT

Size: A4	Date: 2024-09-06	**Rev: rev3**
KiCad E.D.A. 9.0.0		Id: 6/9

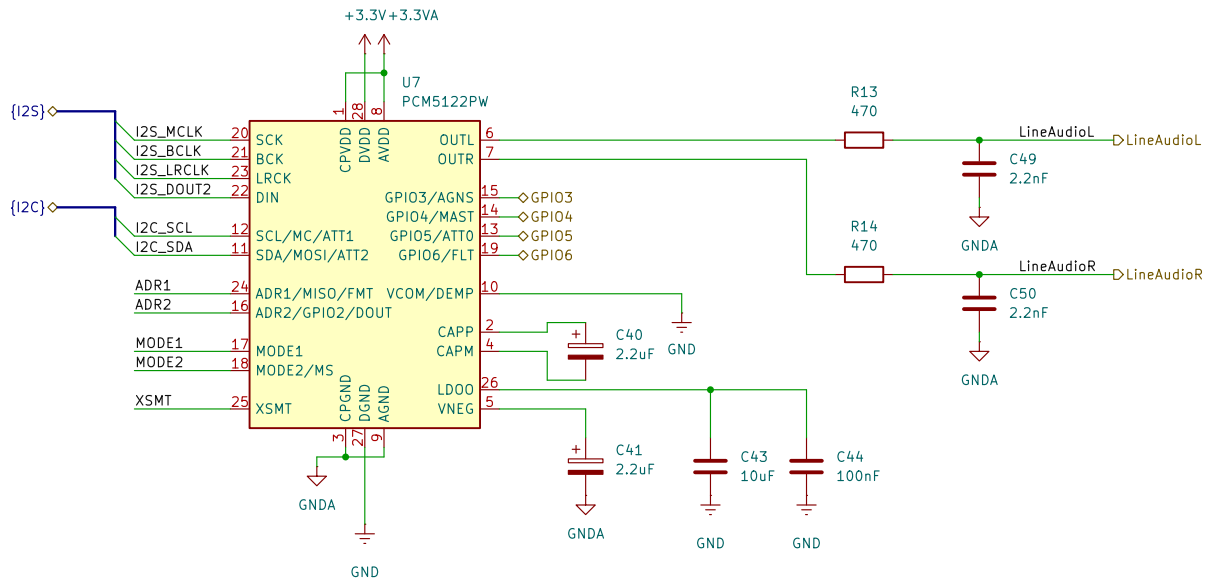

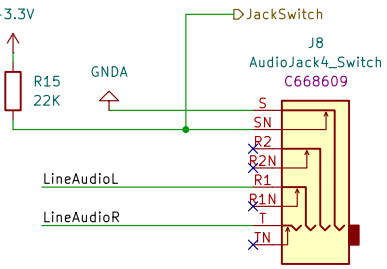

Address:	Mode control selection pin:		Soft mute control:
ADR1 = Low, ADR2 = Low:	MODE1 = Low, MODE2 = Low:	Hardwired mode	Soft mute (Low)
ADR1 = High, ADR2 = Low:	MODE1 = Low, MODE2 = High:	I2C mode	soft un-mute
ADR1 = Low, ADR2 = High:	MODE1 = High:	SPI mode	(High)
ADR1 = High, ADR2 = High:			

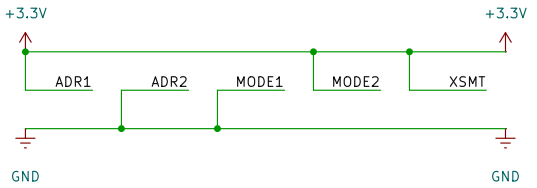

Strapping

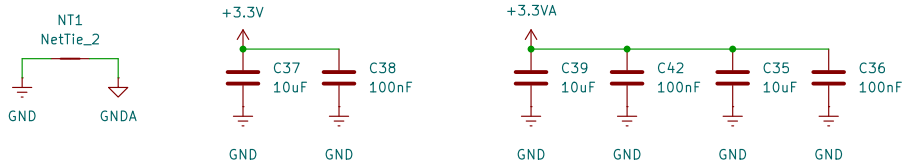

FutureProofHomes

Sheet: /DAC/
File: DAC.kicad_sch

Title: Satellite1 HAT

Size: A4	Date: 2024-09-06	**Rev: rev3**
KiCad E.D.A. 9.0.0		Id: 8/9

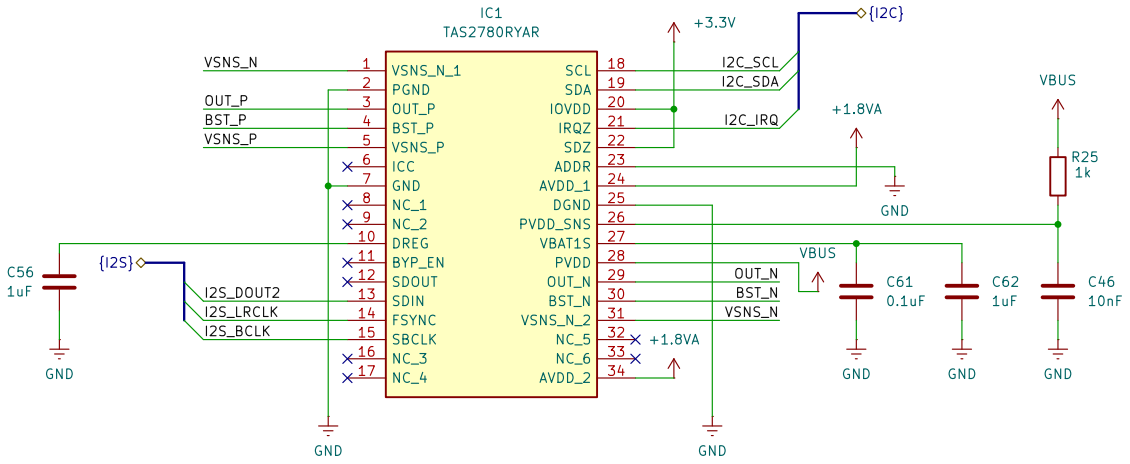

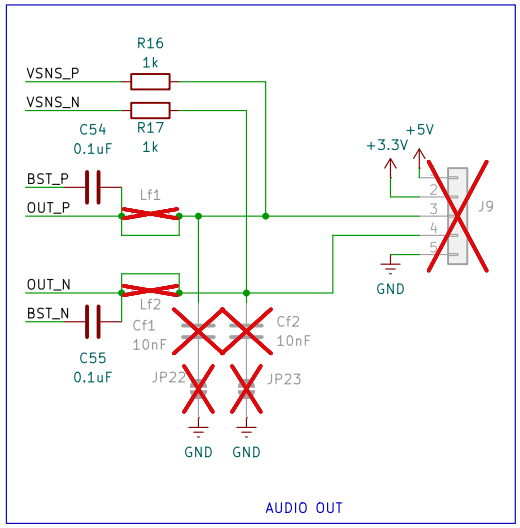

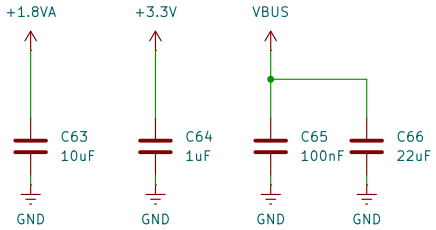

FutureProofHomes

Sheet: /PowerDAC/
File: PowerDAC.kicad_sch

Title: Satellite1 HAT

Size: A4	Date: 2024-09-06	**Rev: rev3**
KiCad E.D.A. 9.0.0		Id: 9/9

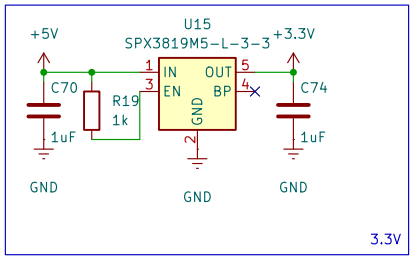

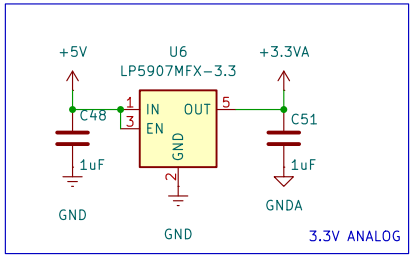

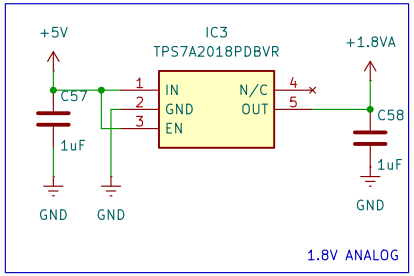

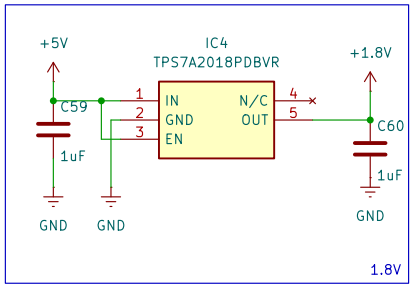

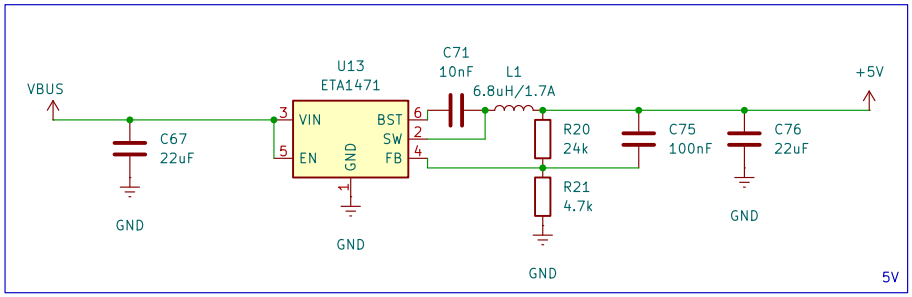

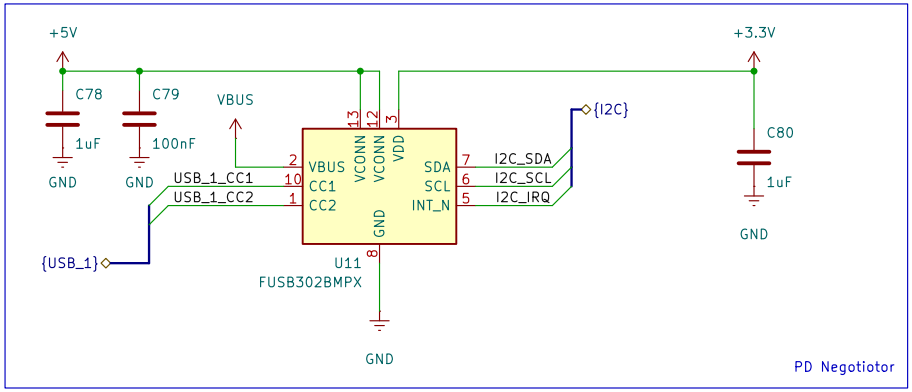

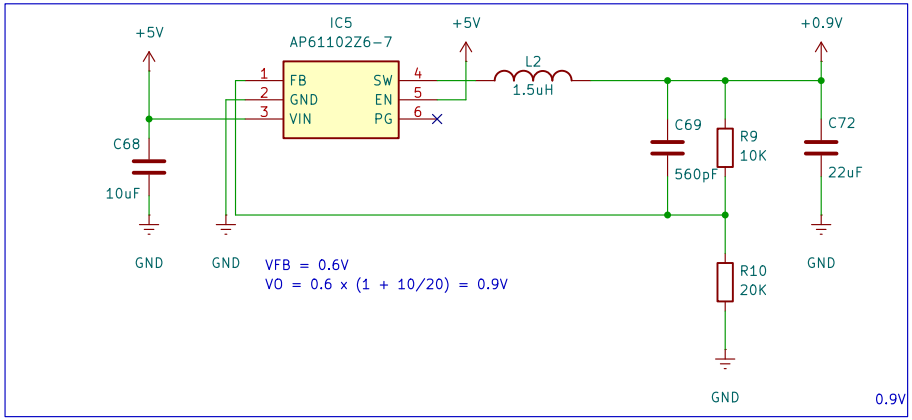

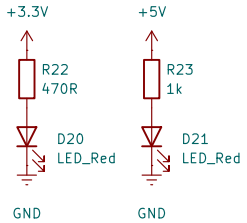

FutureProofHomes

Sheet: /Power/
File: Power.kicad_sch

Title: Satellite1 HAT

Size: A4	Date: 2024-09-06	**Rev: rev3**
KiCad E.D.A. 9.0.0		Id: 10/9