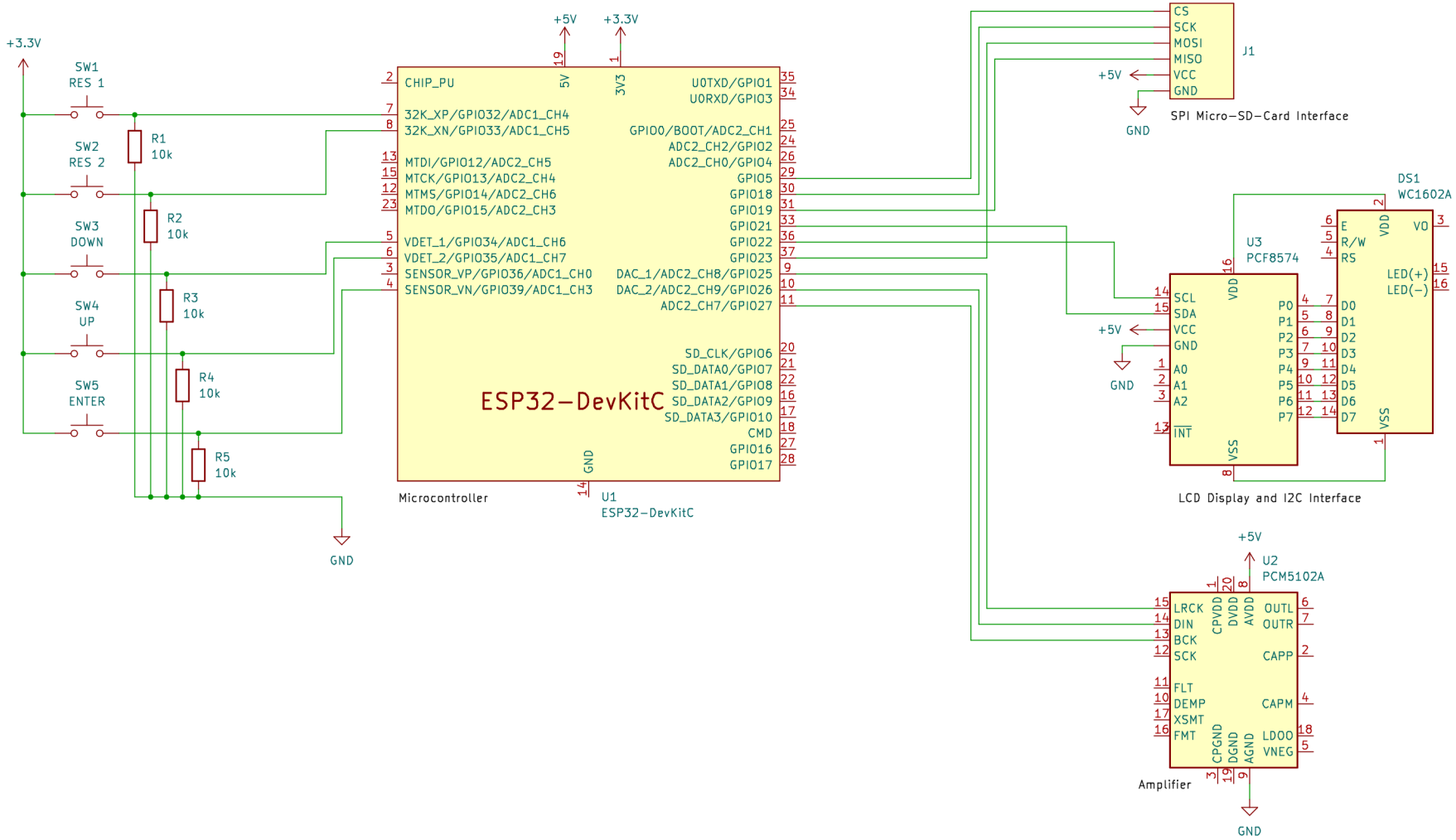

Author: Dominik Häußer
License: CC by 4.0
creativecommons.org/licenses/by/4.0

Sheet: /
File: circuit_diagram.kicad_sch

Title: ESP Radio

Size: A4	Date: 2023-06-05	**Rev: 1.0.0**
KiCad E.D.A. kicad 7.0.5		Id: 1/1