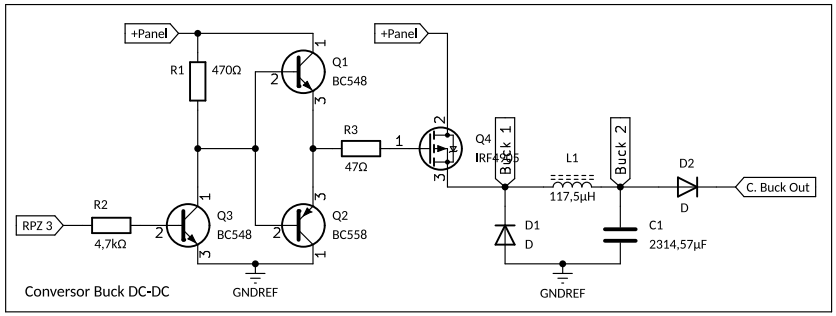

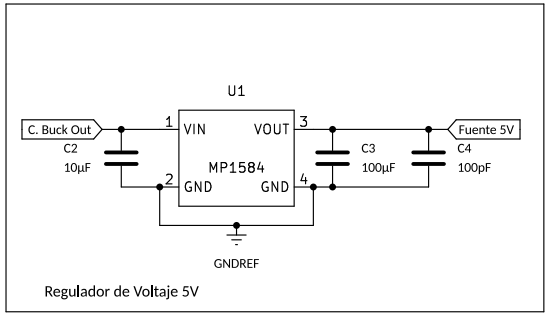

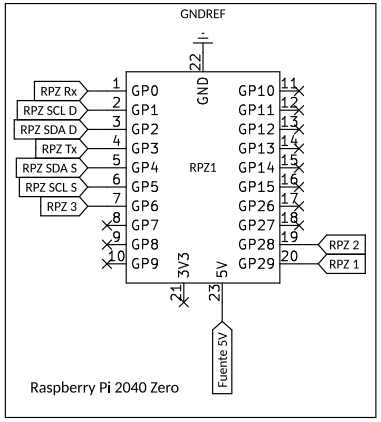

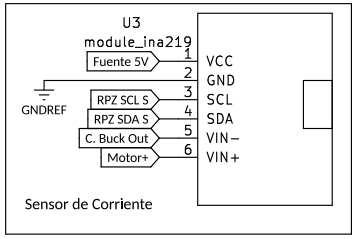

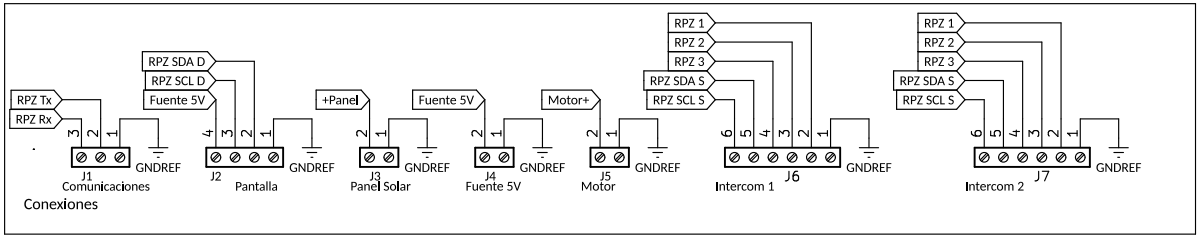

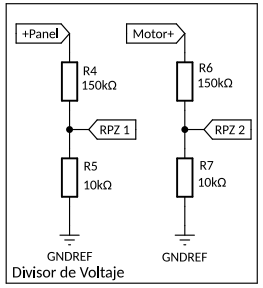

IMPA – GraviCap

Sheet: /

File: GraviCap.kicad_sch

Title: MPPT

Size: A4	Date: 05-10-2024	**Rev:**
KiCad E.D.A. kicad 7.0.7		Id: 1/1