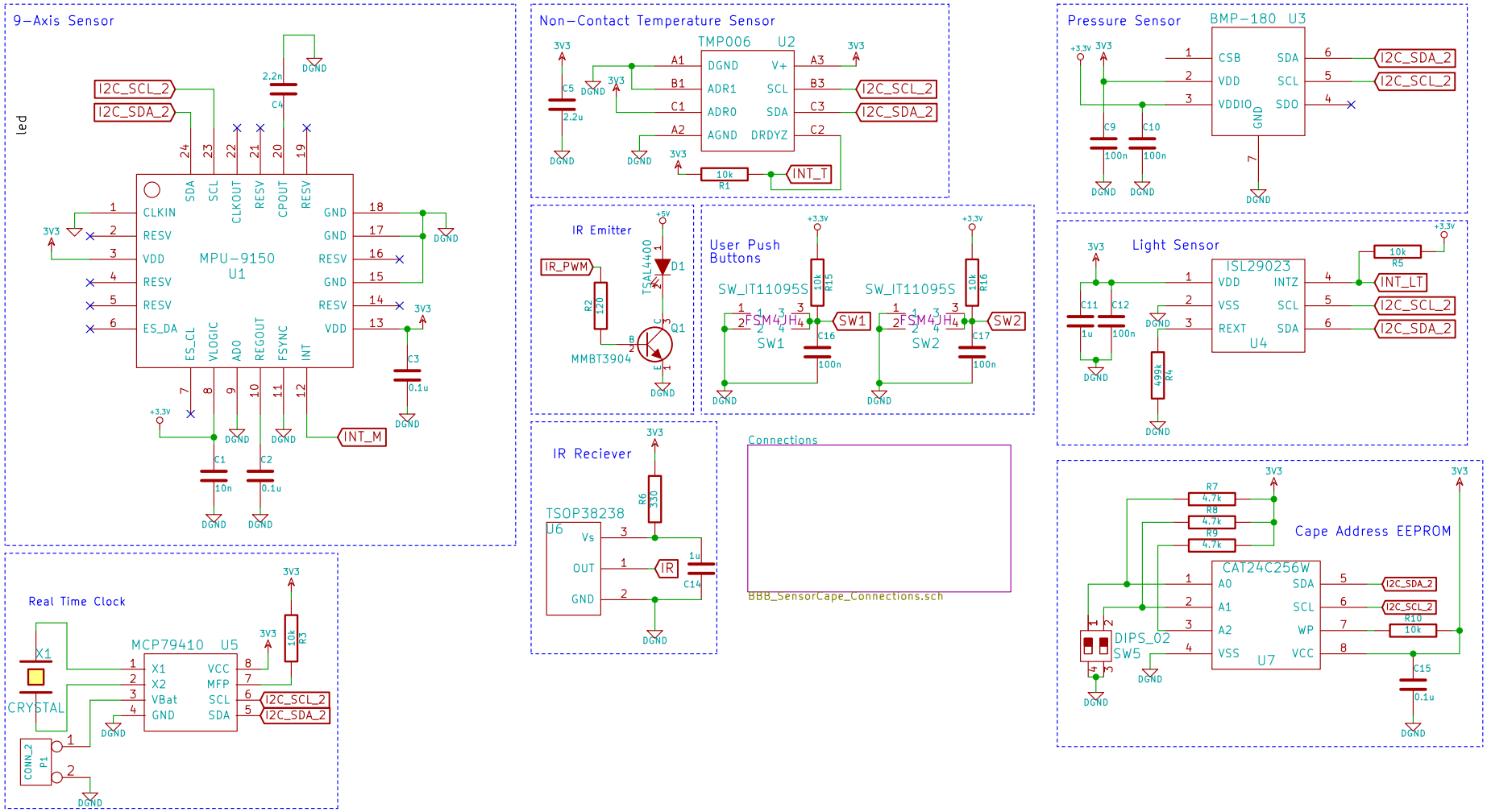
9-Axis Sensor
MPU-9150
U1
CLKIN
RESV
VDD
ES_DA
ES_CL
VLOGIC
AD0
REGOUT
FSYNC
INT
CLKOUT
CPOUT
GND
I2C_SCL_2
I2C_SDA_2
INT_M
Non-Contact Temperature Sensor
TMP006
U2
DGND
ADR1
ADR0
AGND
V+
SCL
SDA
DRDYZ
INT_T
Pressure Sensor
BMP-180
U3
CSB
VDDIO
SDO
Light Sensor
ISL29023
U4
INTZ
REXT
INT_LT
IR Emitter
IR_PWM
TSAL4400
MMBT3904
User Push Buttons
SW_IT11095S
FSM4JH
SW1
SW2
IR Reciever
TSOP38238
U6
Vs
OUT
IR
Connections
BBB_SensorCape_Connections.sch
Cape Address EEPROM
CAT24C256W
U7
A0
A1
A2
WP
VCC
DIPS_02
SW5
Real Time Clock
MCP79410
U5
X1
X2
VBat
MFP
CRYSTAL
CONN_2
P1