Step 1: Choose Variant

Use the standard railgun or railgun bipod variant path.

Step 2: Build Shroud Variant

Complete either Railgun Variant or Bipod Variant.

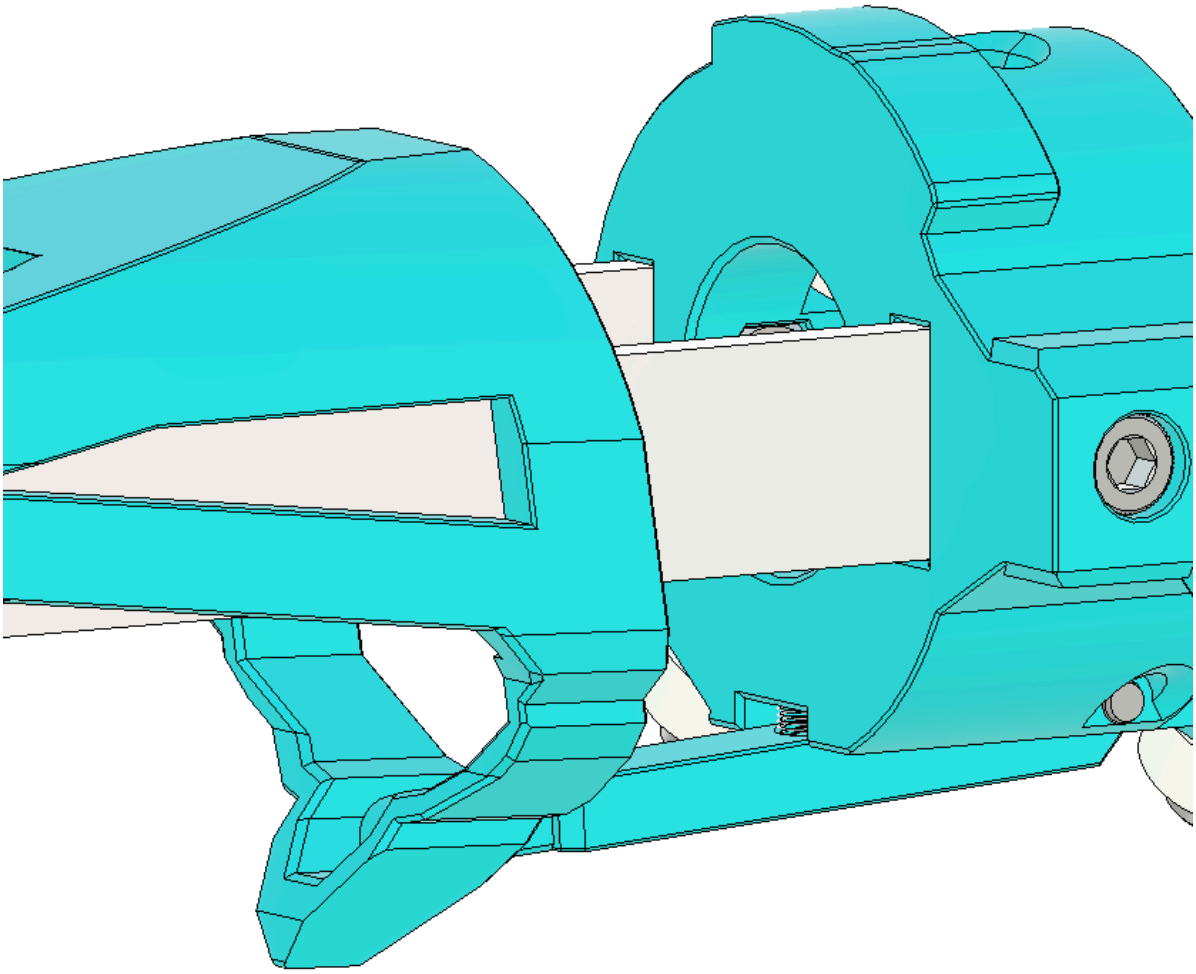

Step 3: Continue To Receiver

After shroud variant completion, proceed to Receiver Assembly.