Core Plunger Sub-Assembly

Step 1: Prep sliding interfaces

- Clean center through-holes of PlungerHead, CatchEnd, and SpringBase.
- Remove stray plastic and smooth only as needed to reduce friction.
- Keep key internal ridges intact.

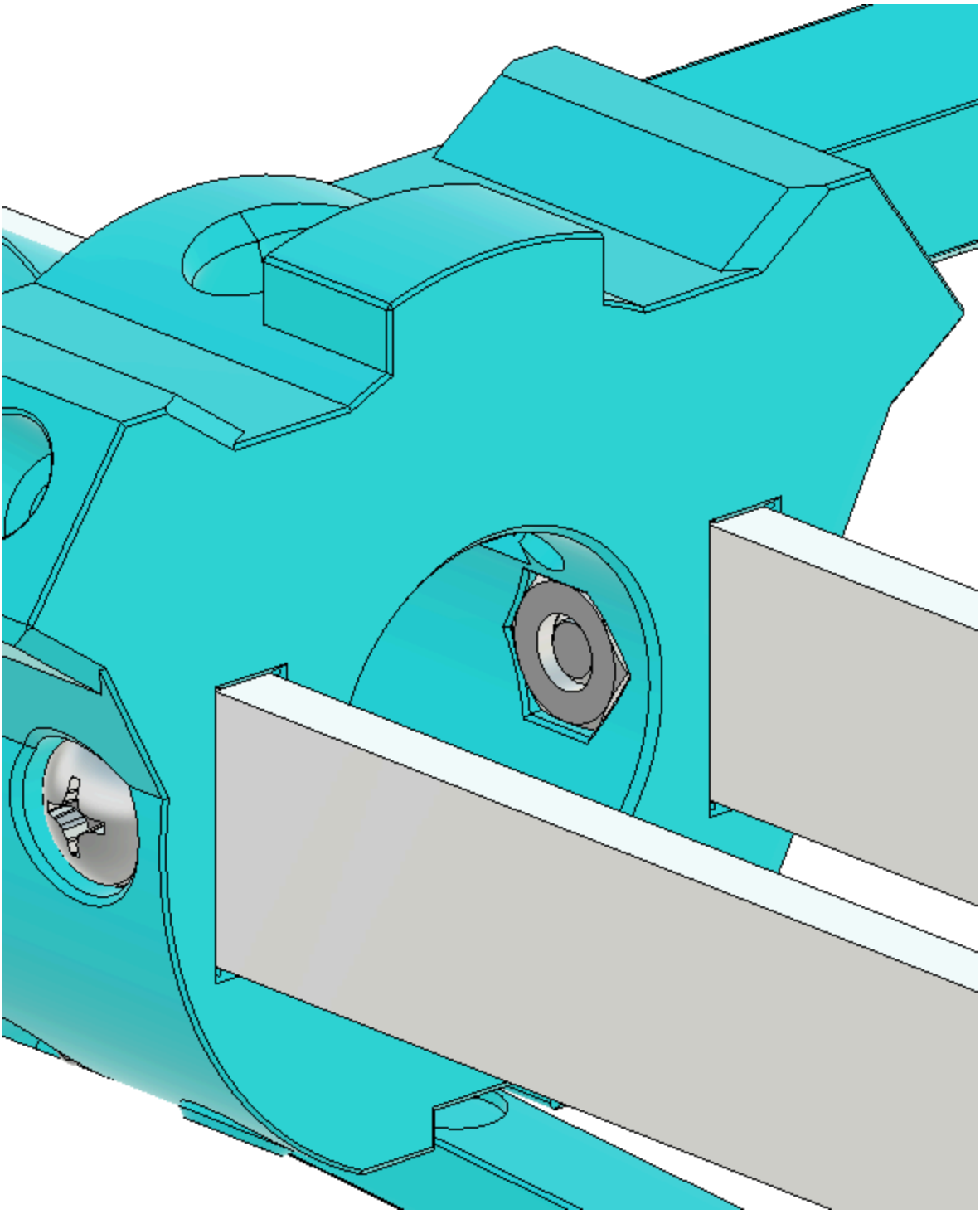

Step 2: Test-fit on barrel and catch tube

- Verify PlungerHead and CatchEnd slide freely on Barrel.

- Verify SpringBase slides freely on CatchTube.
- Adjust fit only until motion is smooth with minimal resistance.

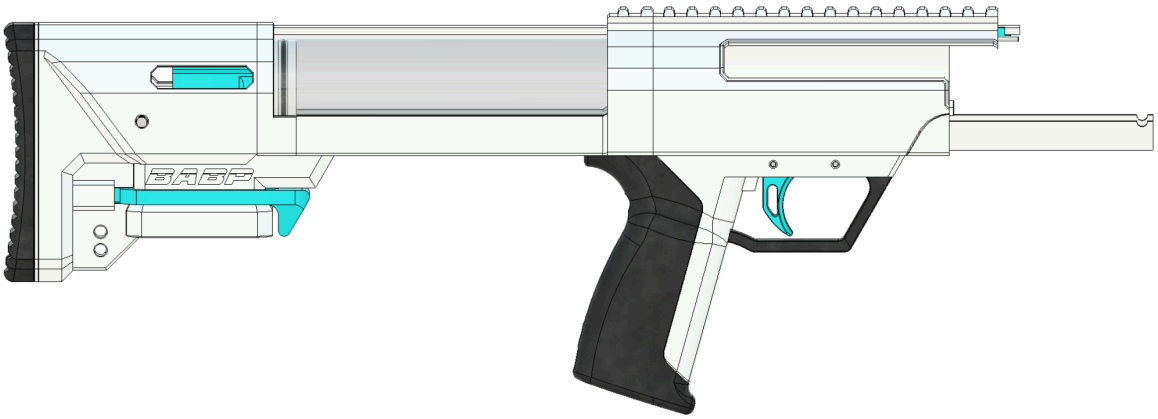

Step 3: Align catch tube in plunger head
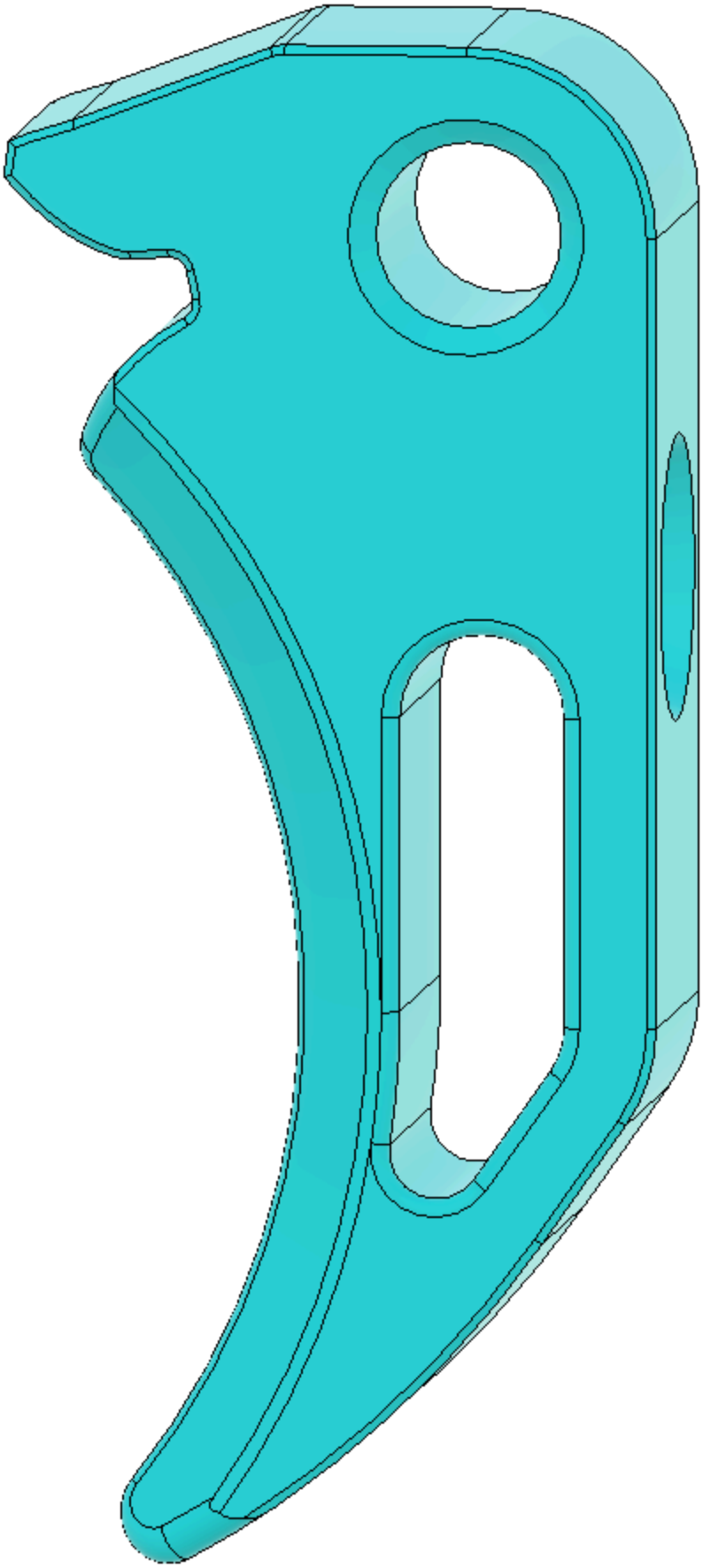
- Insert CatchTube into PlungerHead and rotate until hole patterns align.
- Confirm all four holes align, then rotate to hide holes for insert installation.