Final Assembly

View Materials List

Overview

This section combines the completed sub-assemblies into a working blaster and performs final fit/tension checks.

Steps

Step 1: Install body bars

- Insert both BodyBars into the StockAssembly with circular notch facing up.
- Align side holes and lock with a quick-release pin.

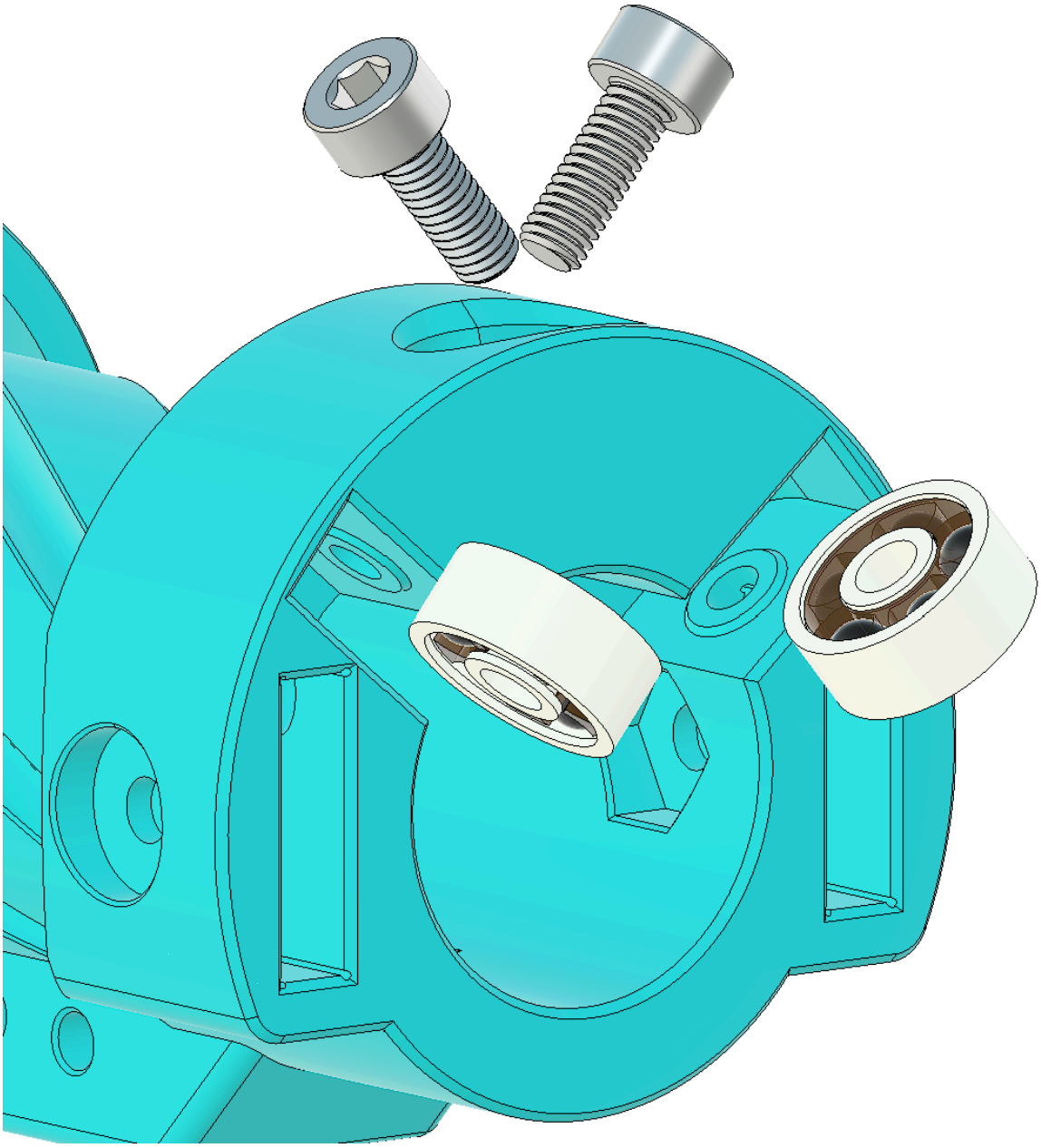

Step 2: Prepare transfer bar and turnaround

- Remove TransferBarAdapter from TransferBar.
- Slide TransferBar through Turnaround rear cutout until Pusher seals in Turnaround.

Step 3: Install turnaround assembly on body bars

- Slide Turnaround, PlungerTube, and TransferBar assembly onto BodyBars.
- Align stock nubs with Turnaround cutouts and seat fully flush.

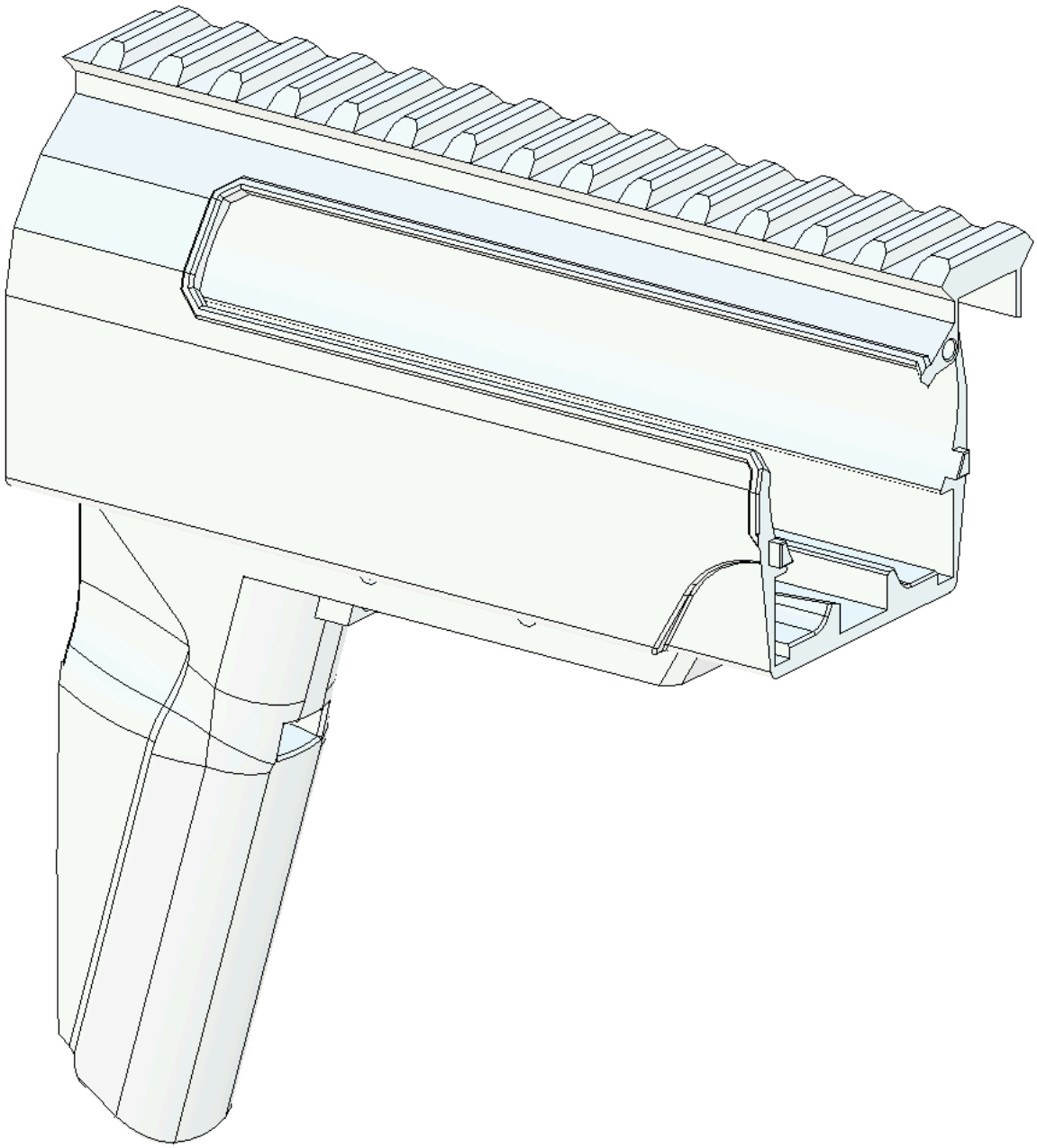

Step 4: Install tube spacer and tube holder

- Install TubeSpacer with cutout facing rear toward Magwell.
- Install TubeHolder with TubeHolderInsert facing away from PlungerTube.

- Reattach TransferBarAdapter with cutout side down.

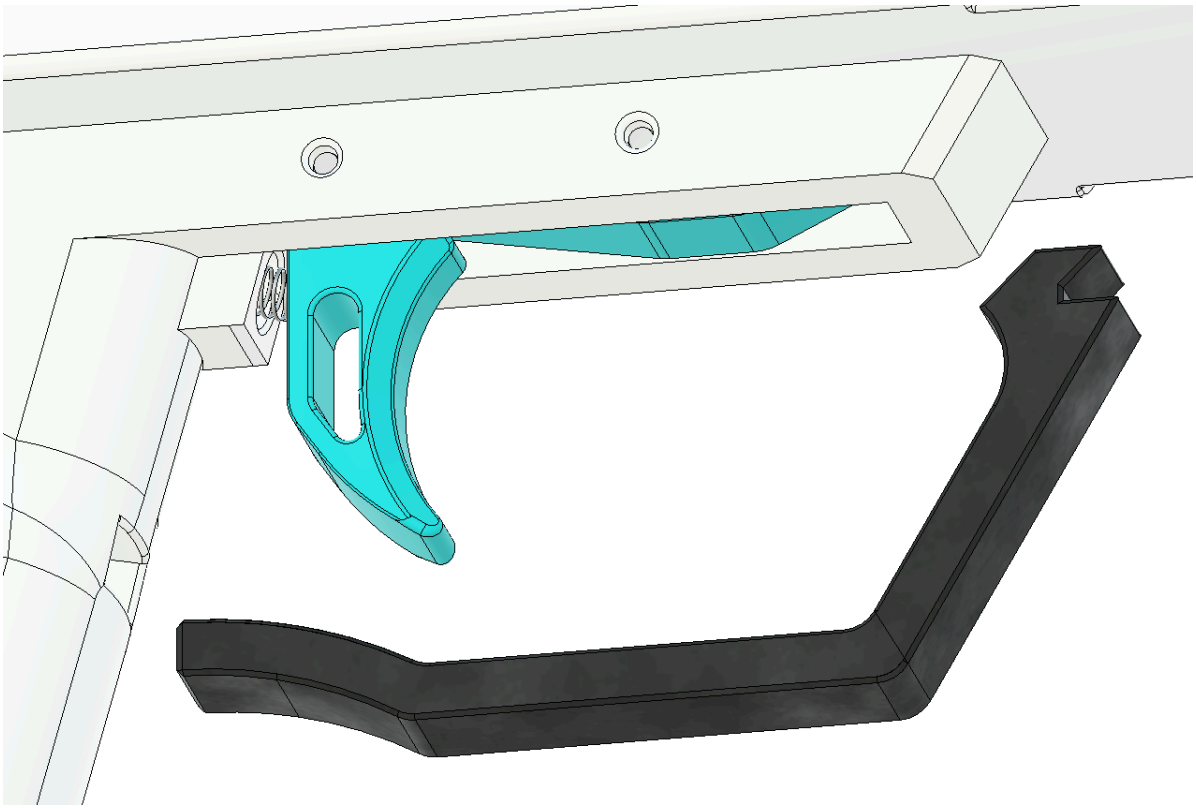

Step 5: Install receiver assembly

- Slide ReceiverAssembly onto TubeHolder until flush.

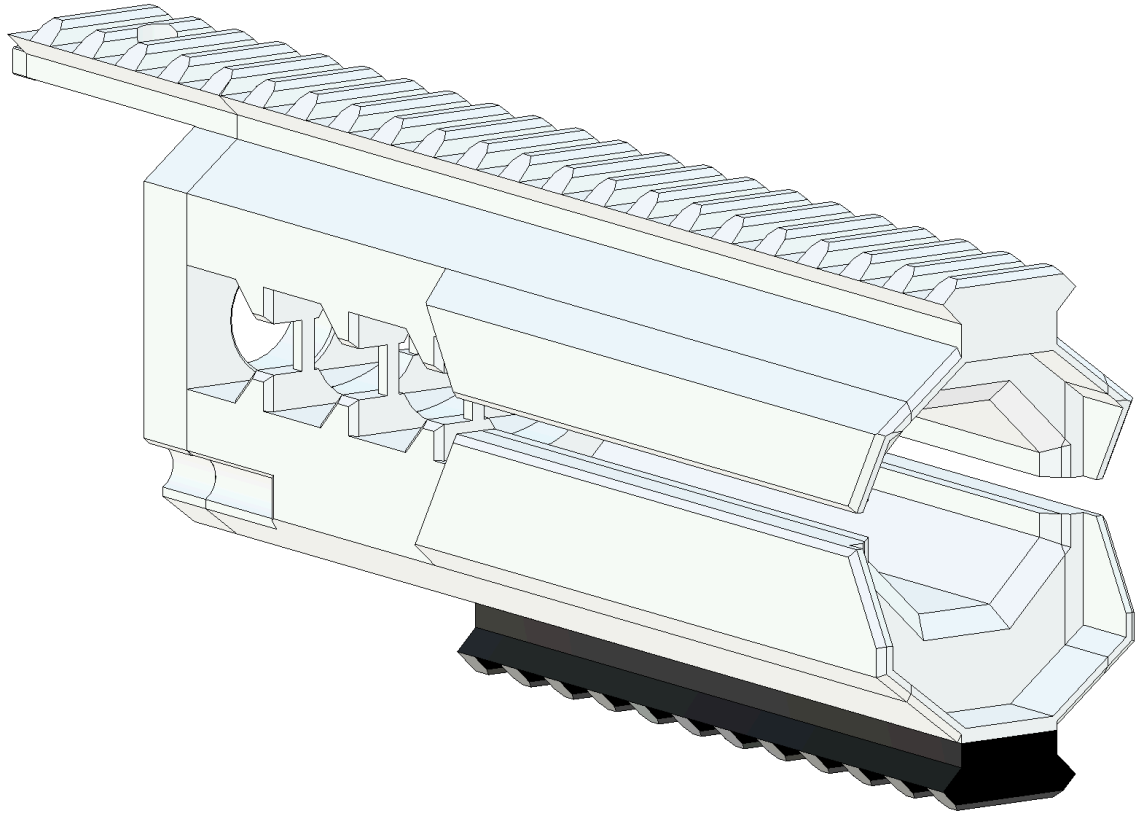

Step 6: Lubricate core interfaces

- Apply lubricant to outer 127 o-rings on PlungerHead, inner 016 o-ring, and inside CatchEnd.

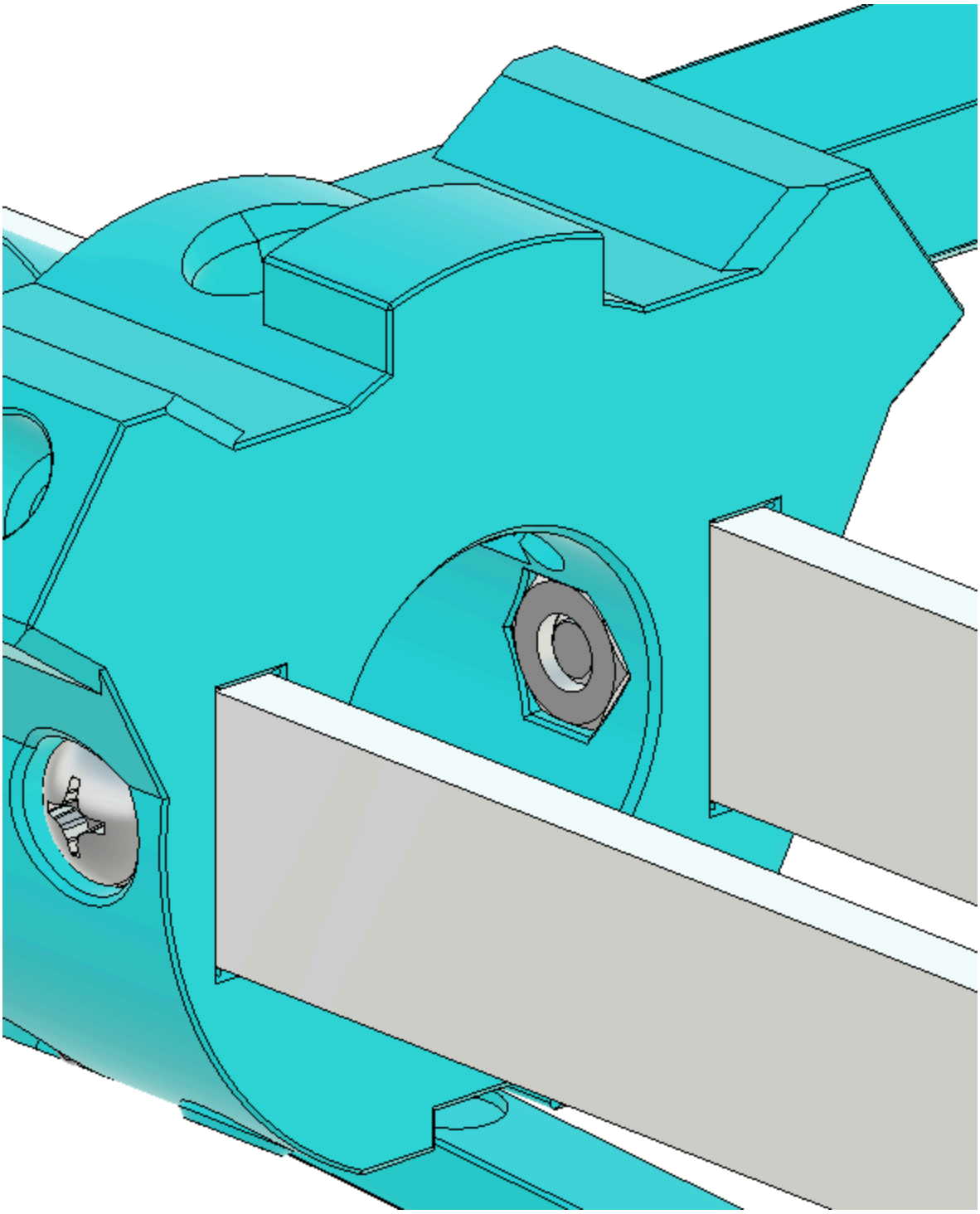

Step 7: Install core

- Slide Core into PlungerTube through Receiver.
- Seat PrimeBlock so raised rear section clicks behind TransferBarAdapter front section.

- Confirm PlungerHead travels smoothly in PlungerTube.

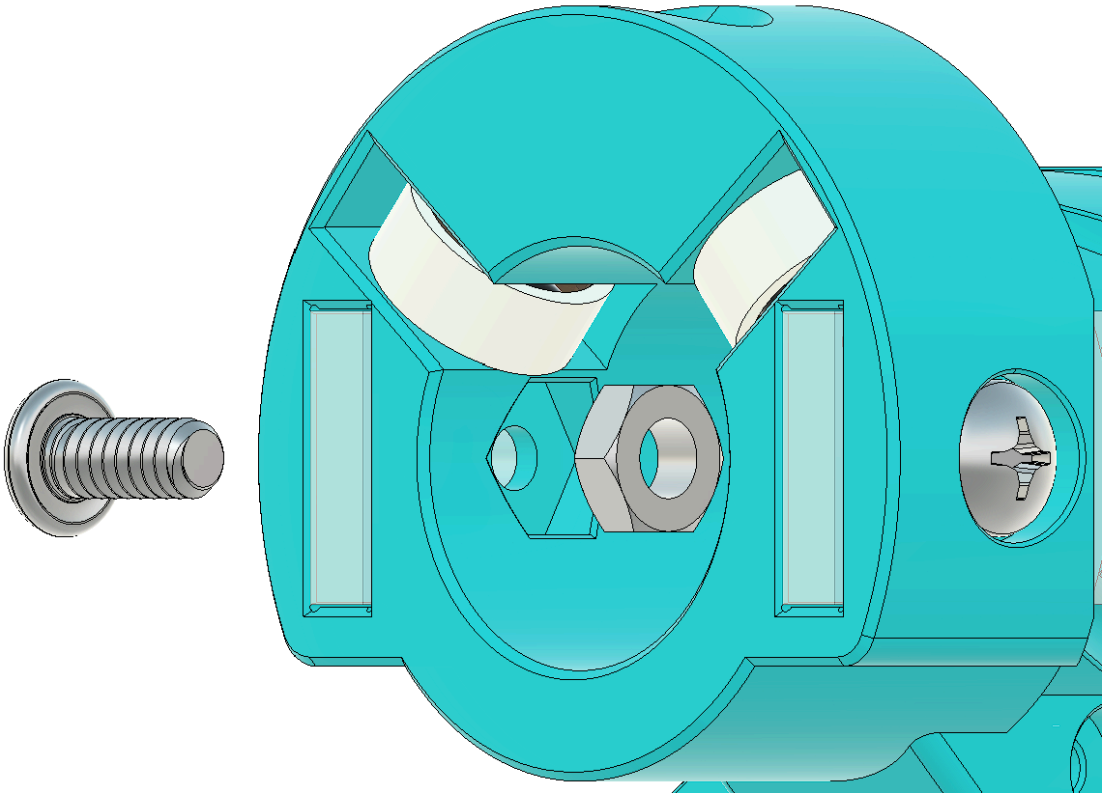

Step 8: Install mid body

- Slide selected MidBody onto Receiver, aligning dowels, nubs, and cutouts.
- Seat fully flush.

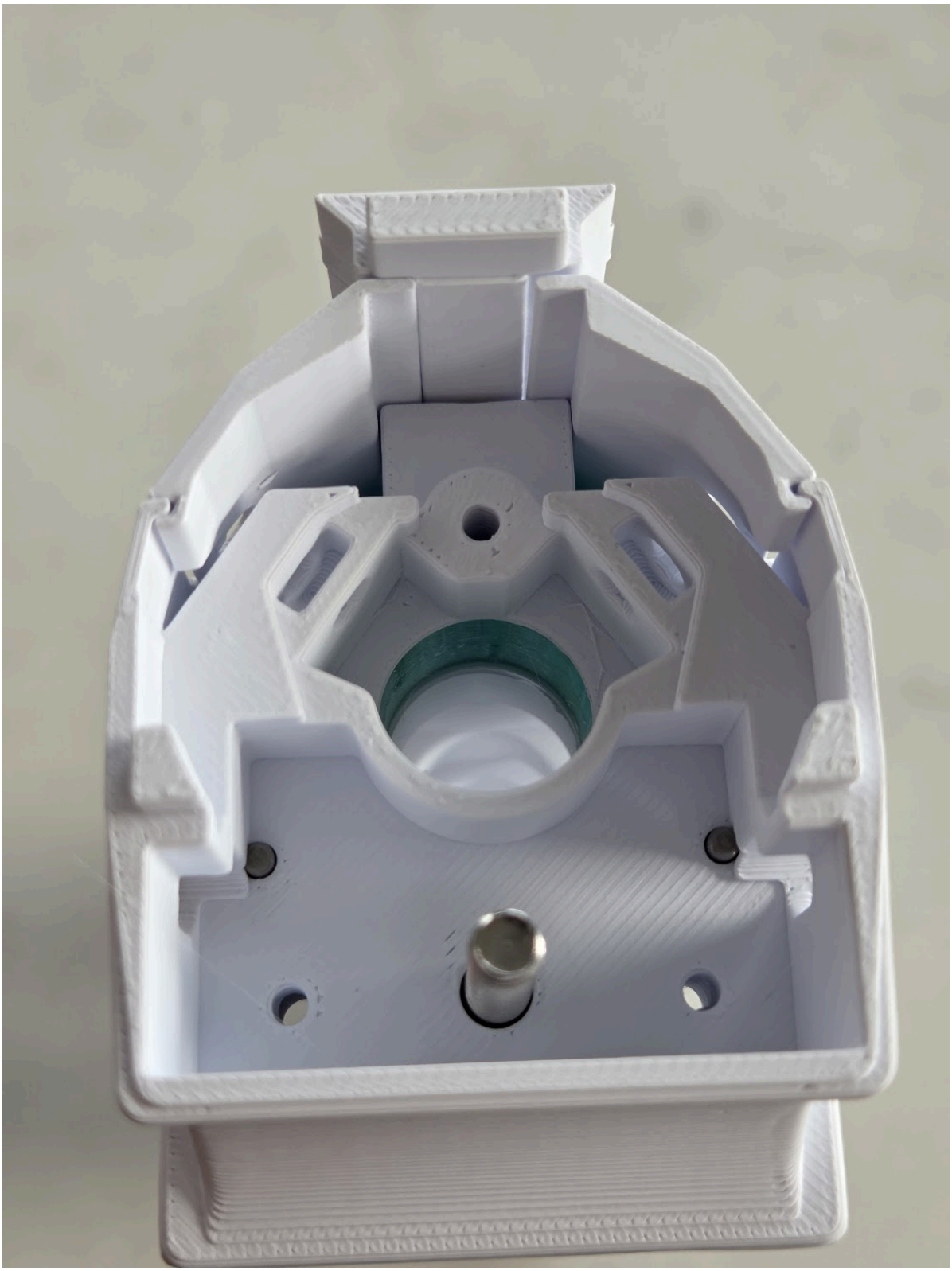

Step 9: Install barrel

- Apply a light lube ring around Barrel about 1 inch from rear edge.
- Insert Barrel through PrimeBlock until fully seated in Turnaround.

Step 10: Install gear tensioner assembly

- Slide GearTensionerAssembly onto front until flush with MidBody.

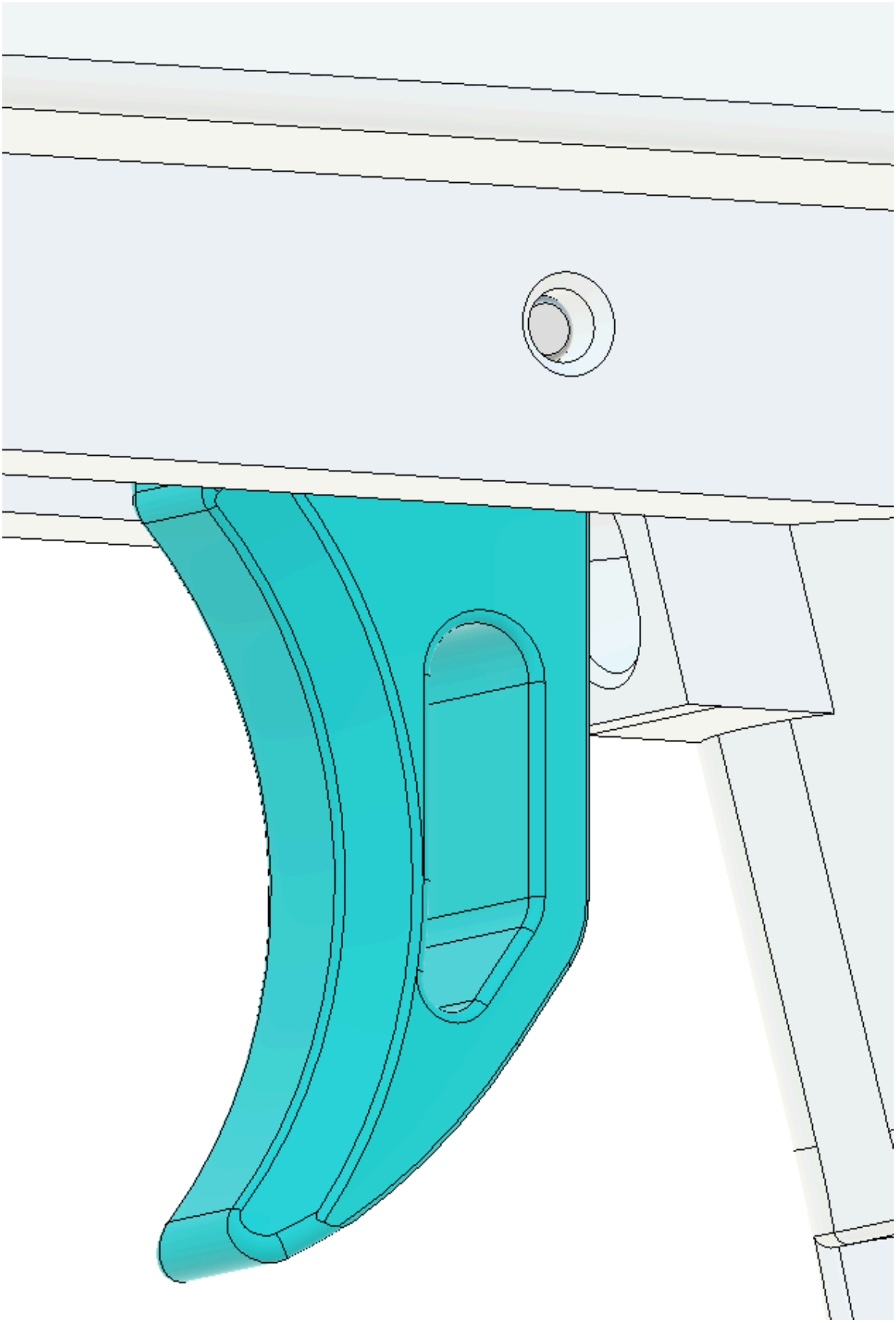

Step 11: Pin and tension

- Rotate OuterGear to align TensionerBlock hole with BodyBars notch.
- Insert quick-release pin.
- Hand-tighten OuterGear until assembly is stiff and no further hand rotation is possible.

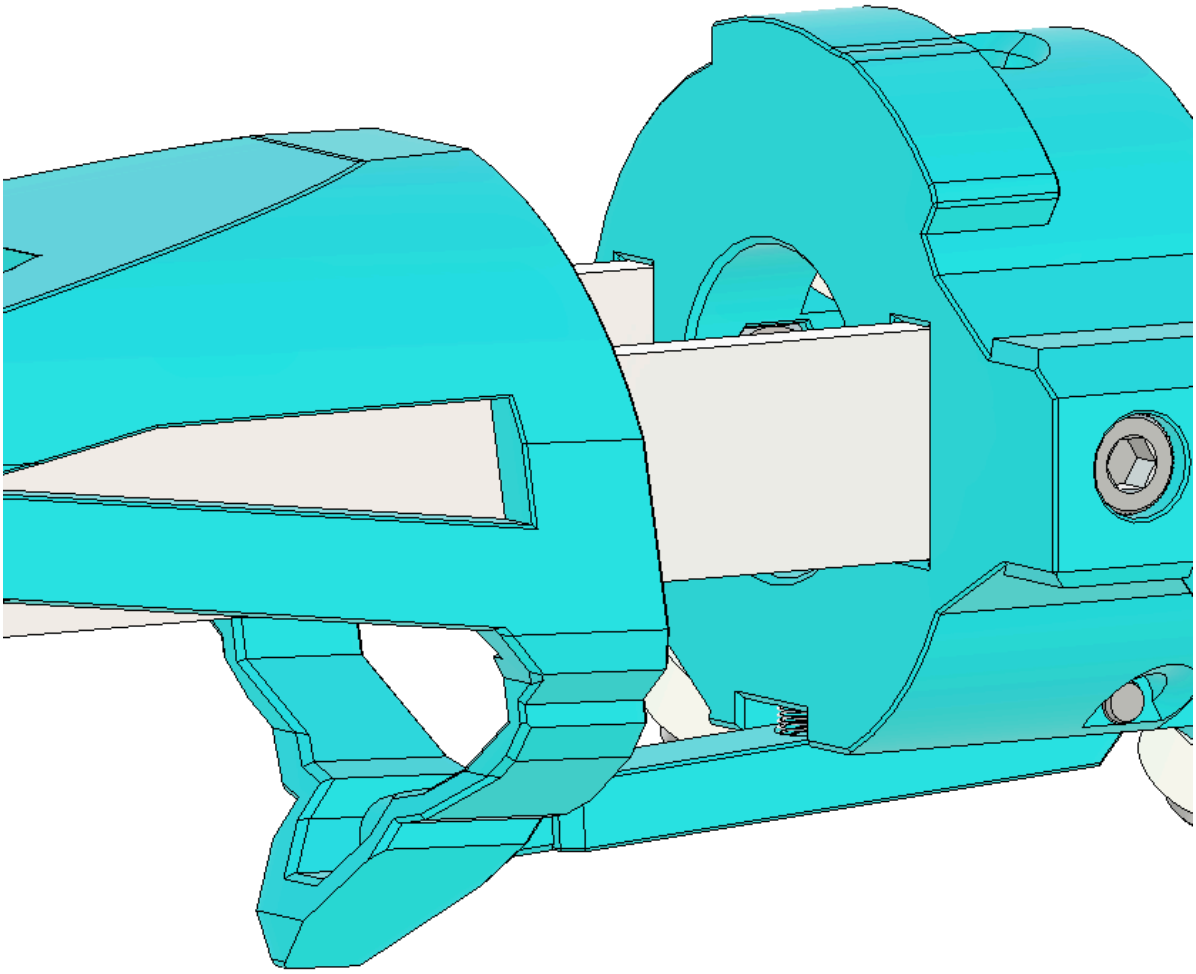

Step 12: Lock barrel

- Ensure Barrel is fully seated in Turnaround.
- Tighten Gear Tensioner thumbscrew to lock barrel in place.
- Do not overtighten.

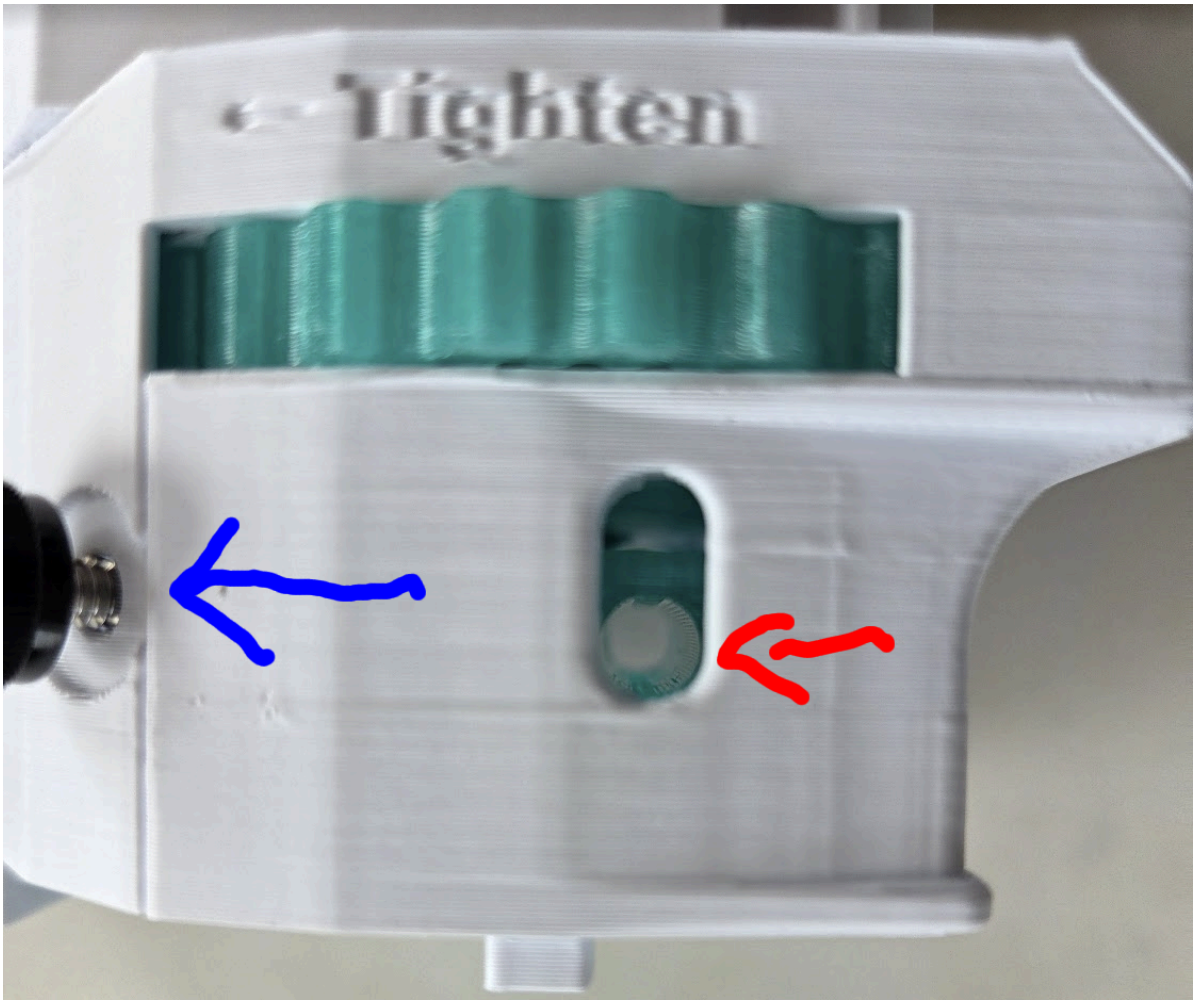

Step 13: Optional SCAR install

- Install two 016 o-rings on SCAR rear grooves.
- Press SCAR onto barrel front until it snaps into place.

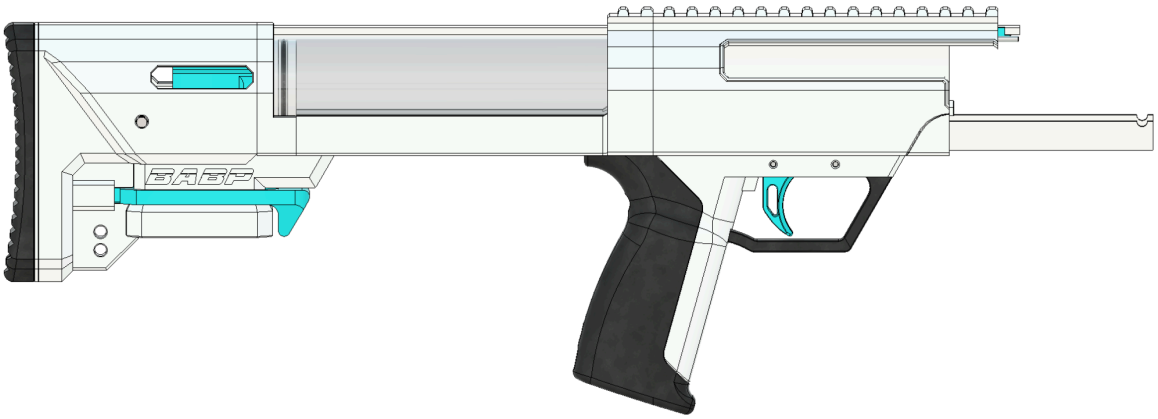

Step 14: Functional check
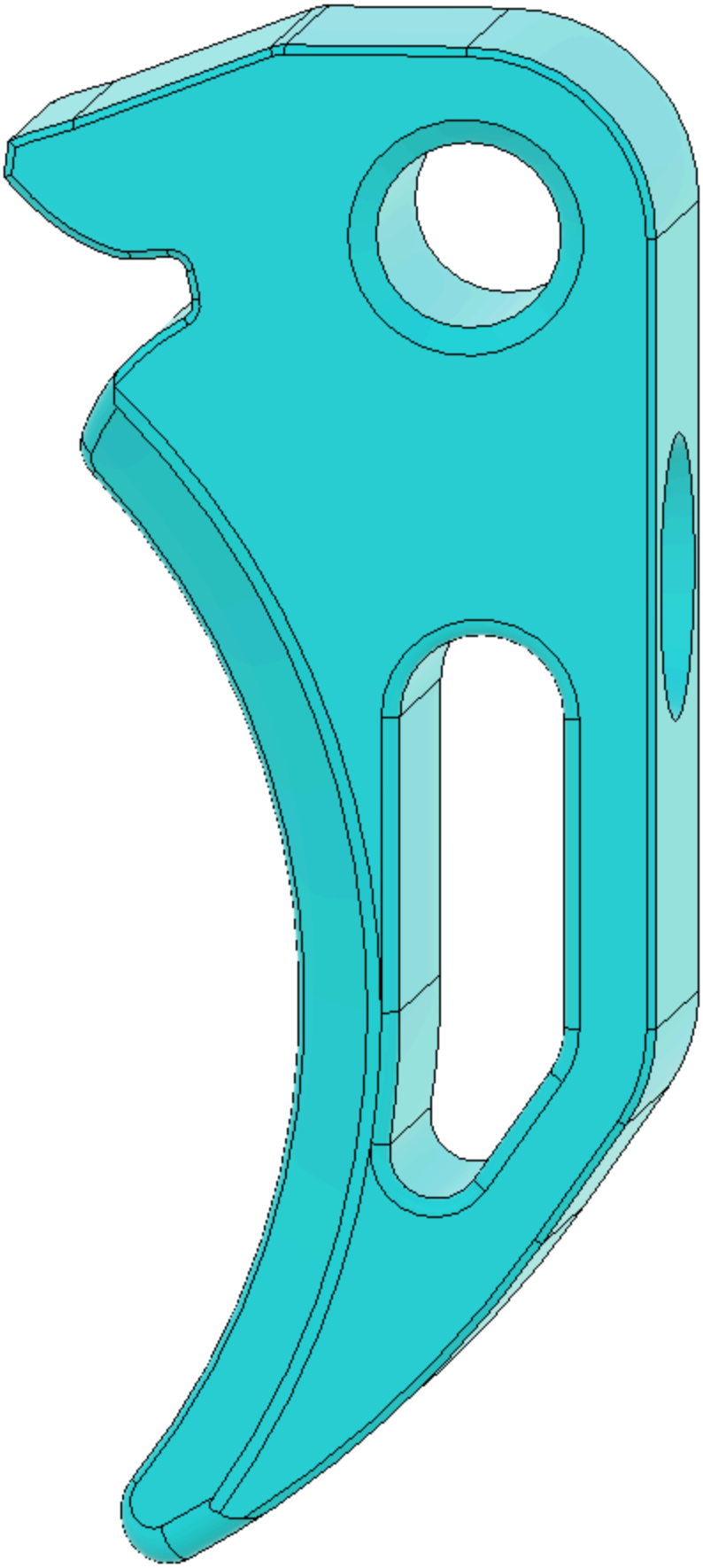
- Insert compatible magazine.
- Prime until catch engages, then return handle forward to load.
- In a safe direction, pull trigger to verify function.