Prime Block Bolt Action Assembly

Overview

Complete common assembly first, then apply bolt-action specific hardware and handle reinforcement.

Steps

Step 1: Secure front pump bar anchors

- Insert a 6-32 hex nut into each front inner cutout.
- Install a 6-32 Phillips screw from the outside on each side, passing through the pump bar.

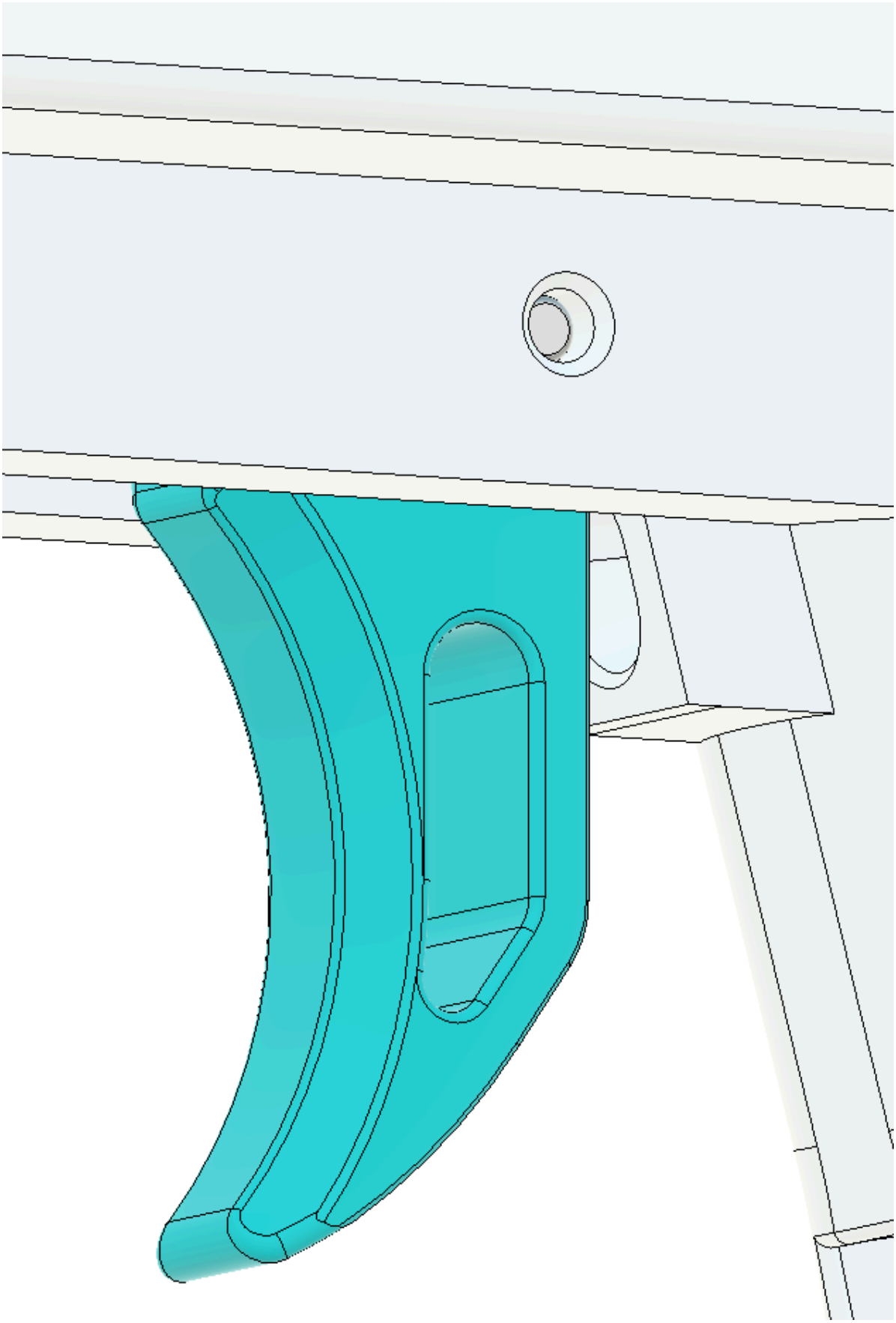

Step 2: Secure rear pump bar anchors

- Insert a 6-32 hex nut into each rear inner cutout.
- Install a 6-32 Phillips screw from the outside on each side, passing through the pump bar.

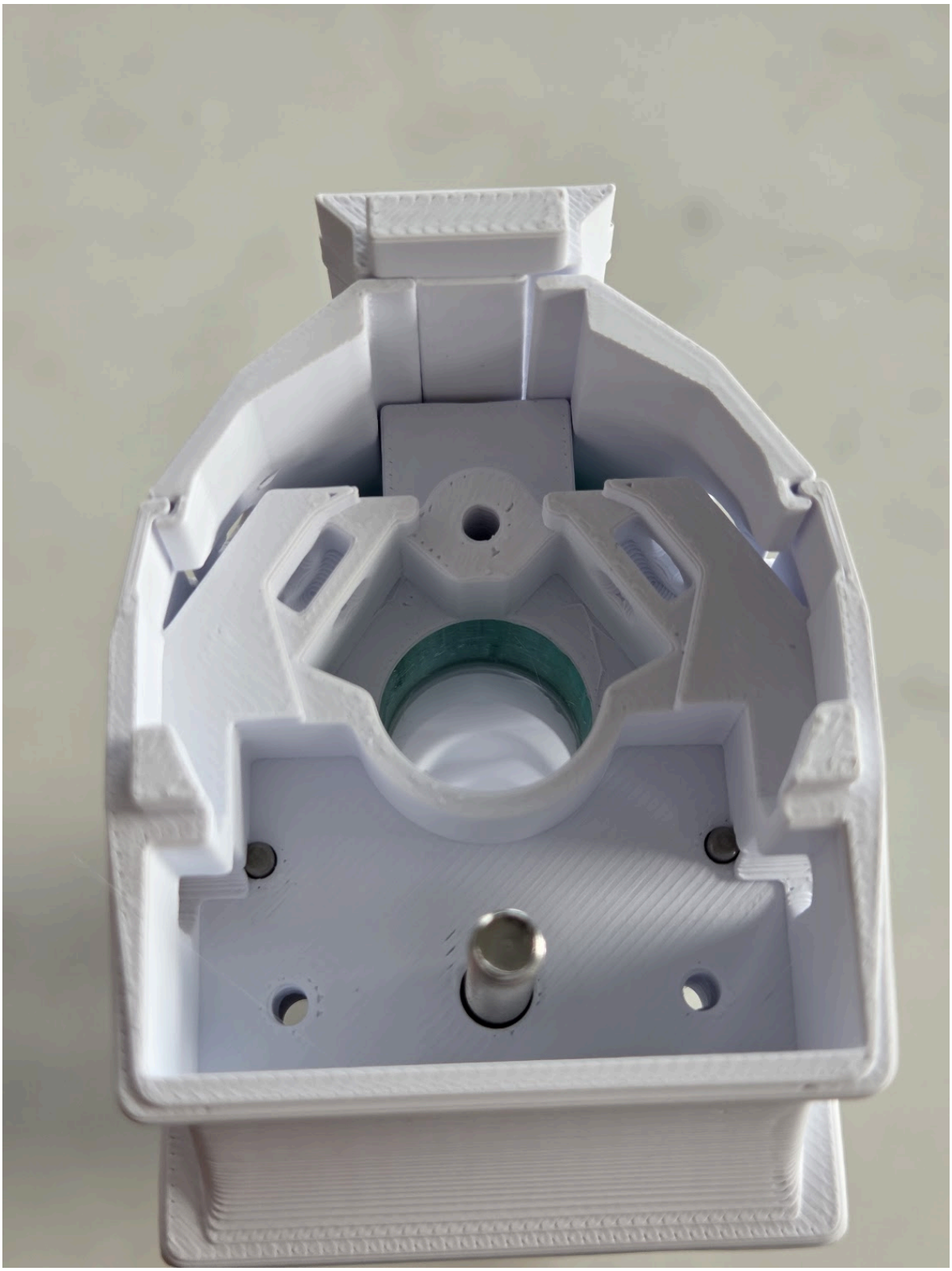

Step 3: Install top rear reinforcement

- Install one 6-32 socket head screw on each top rear side.
- Seat fully without overtightening.

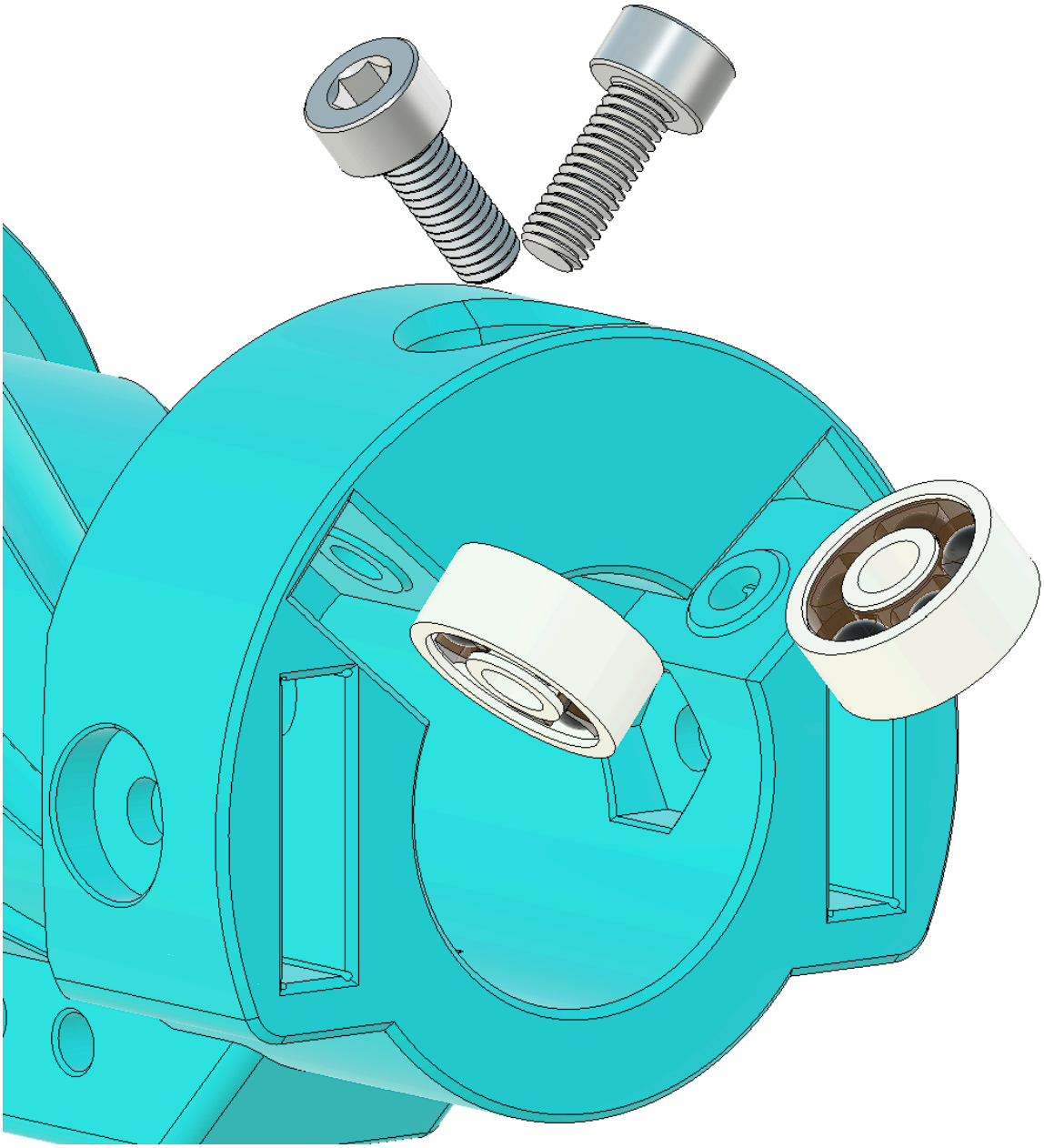

Step 4: Reinforce handle screws

- Install two 6-32 2 inch Phillips screws into each handle.
- Ensure screws are fully seated but not overtorqued.

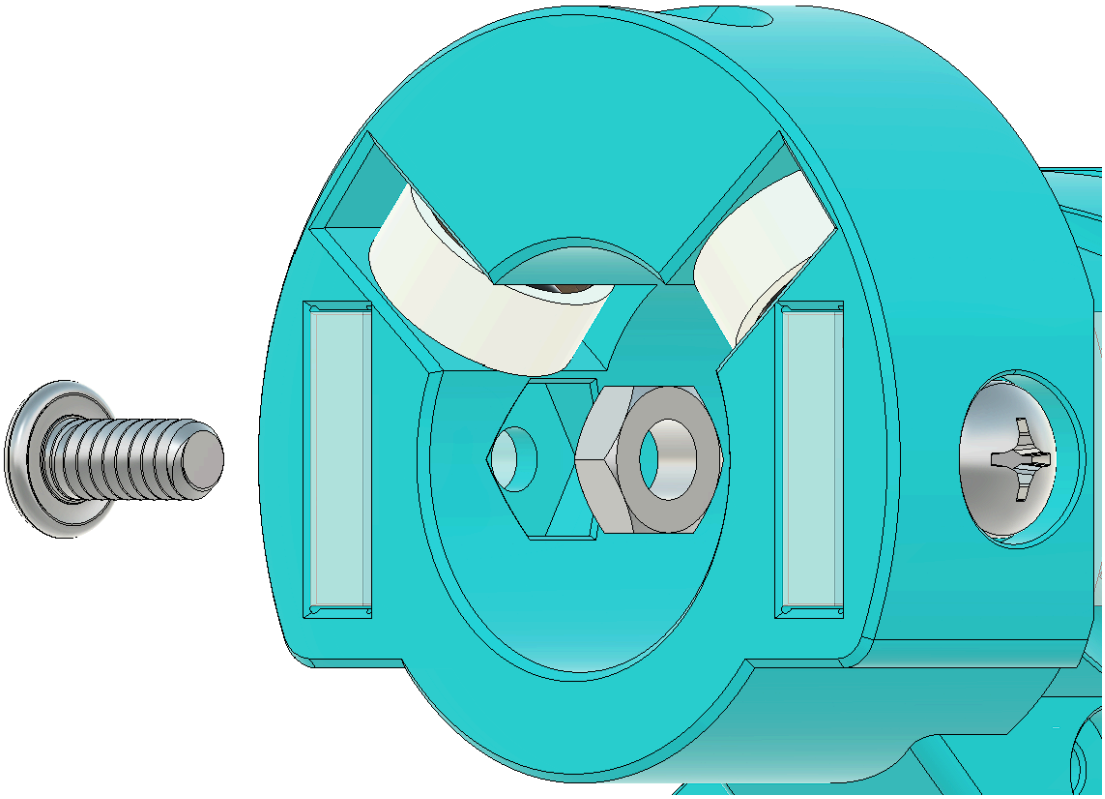

Step 5: Install handle heads

- Slide two HandleHead parts onto each handle with attachment hole facing down.
- Secure each with a 6-32 socket head screw.

Step 6: Install bottom bearing pair
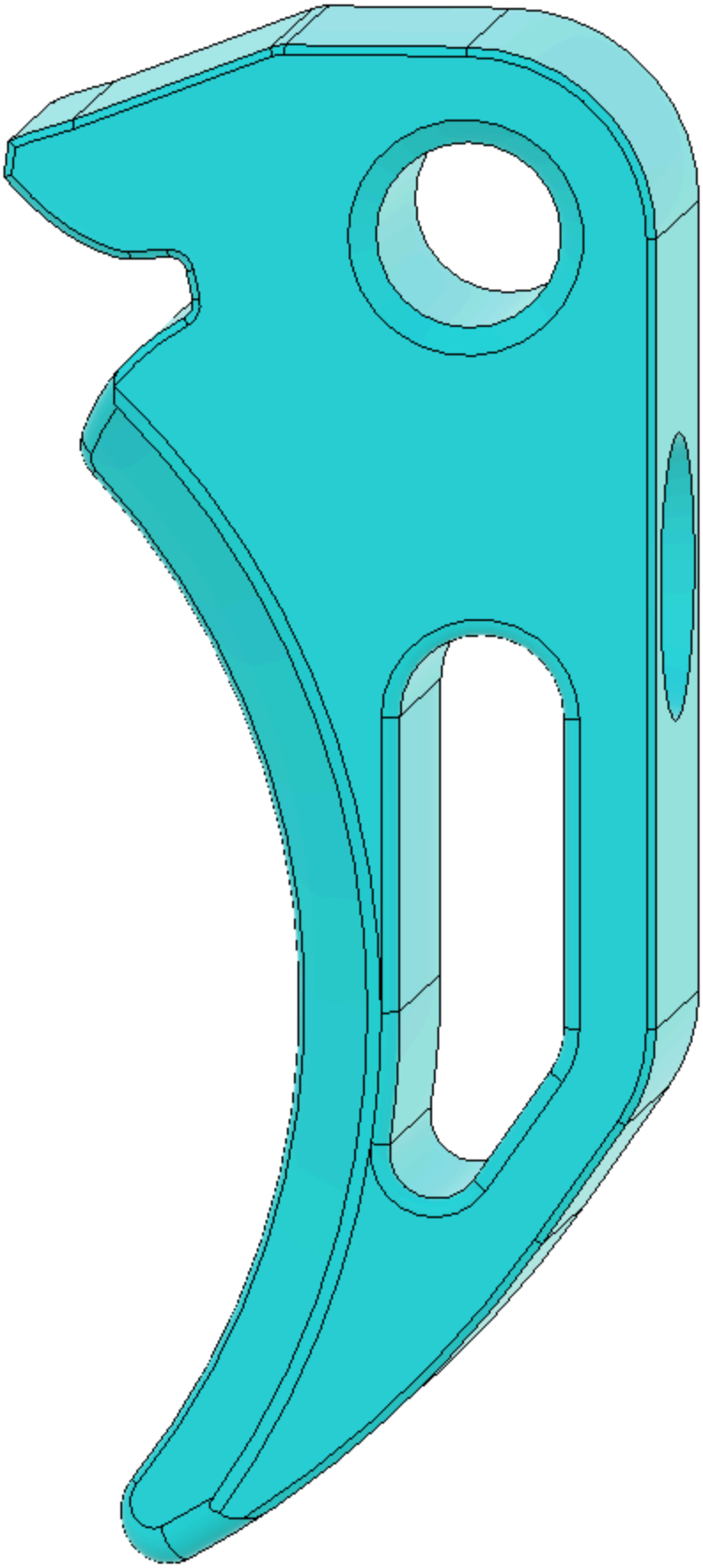
- Install a 623 POM bearing on each bottom side.
- Secure each with one 8 mm M3 socket head screw.