Prime Block Dual Straight Pull Assembly

Overview

Follow common assembly first, then install mirrored straight-pull reinforcement and hardware on both sides.

Steps

Step 1: Complete common assembly

- Finish all steps in Common Assembly.

Step 2: Install mirrored front and rear anchors

- Install 6-32 hex nuts and 6-32 Phillips screws at front and rear on both sides through pump bars.

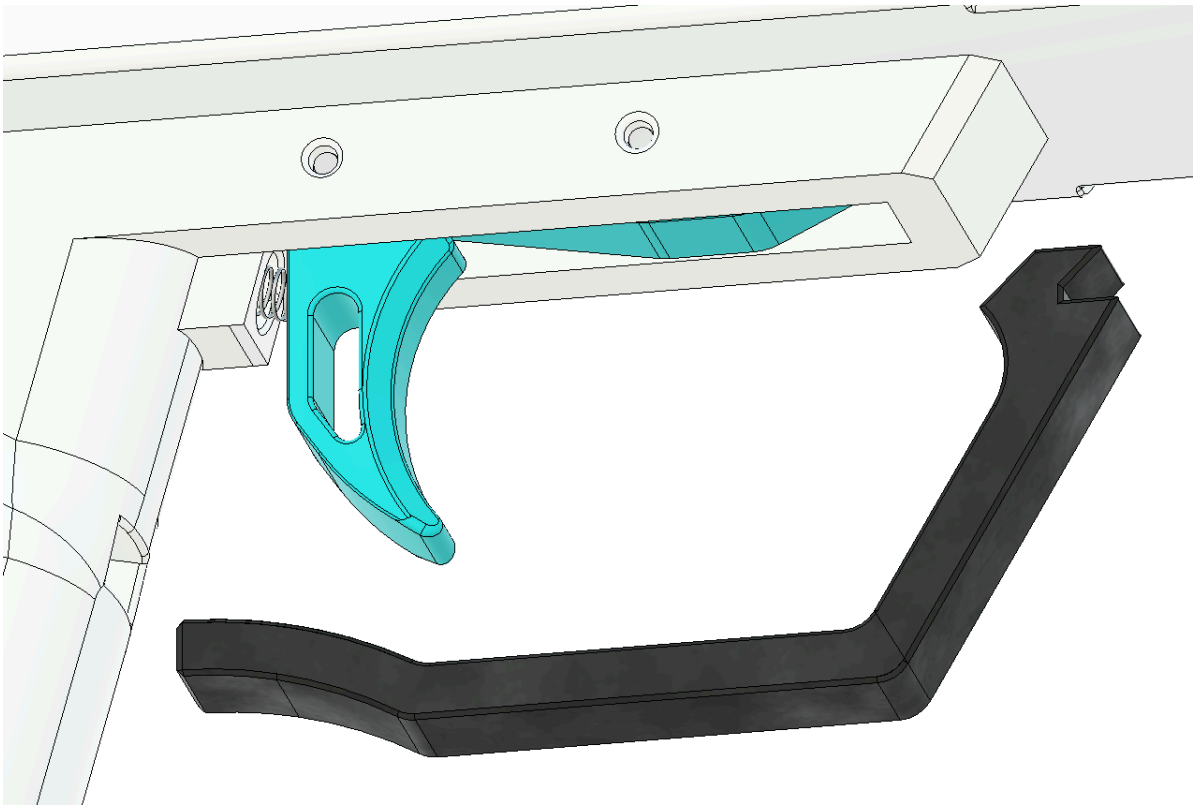

Step 3: Install reinforcement hardware

- Install top rear 6-32 socket head screws.
- Install handle reinforcement screws and verify free movement.

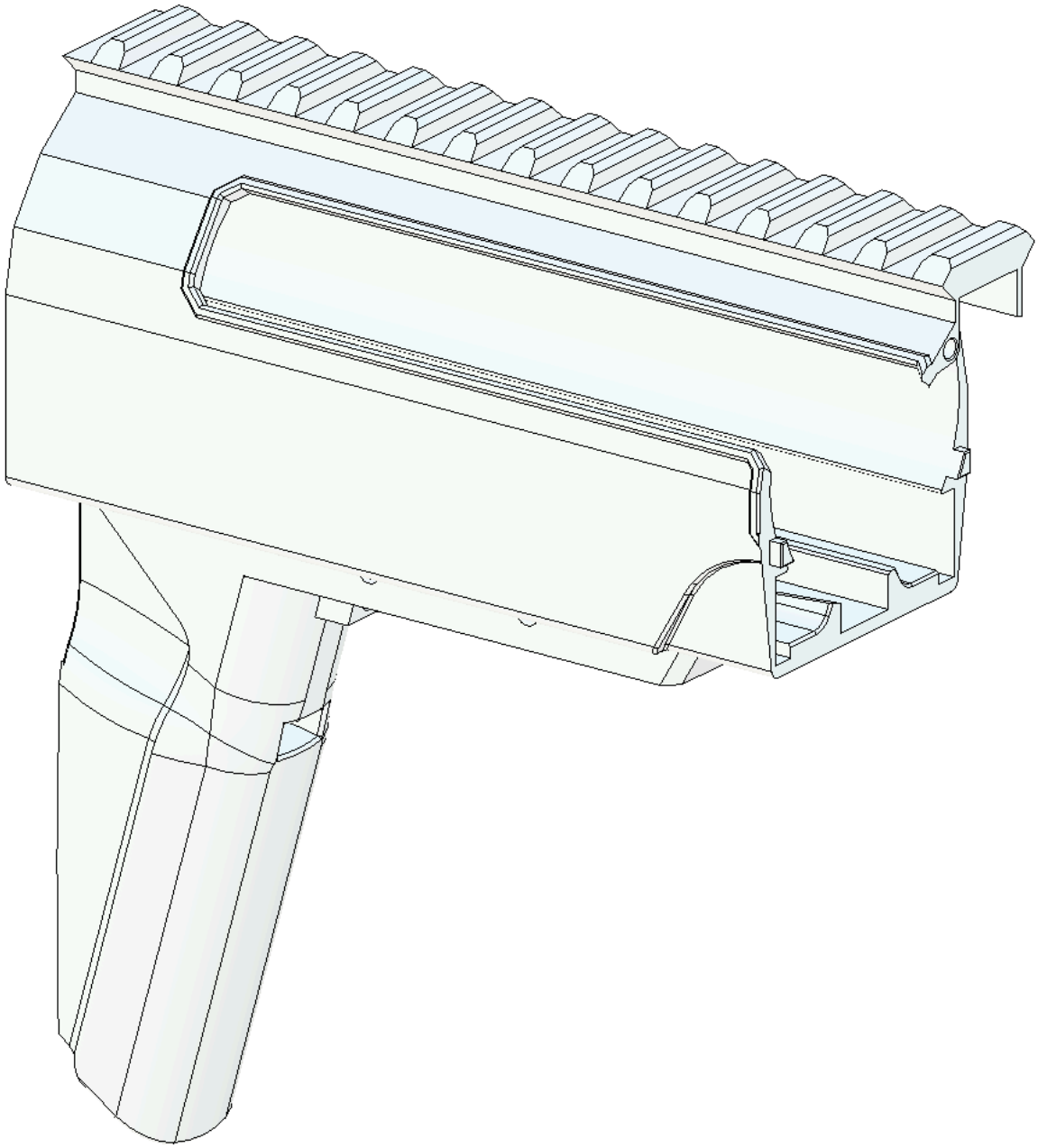

Step 4: Install handle heads and bottom bearings
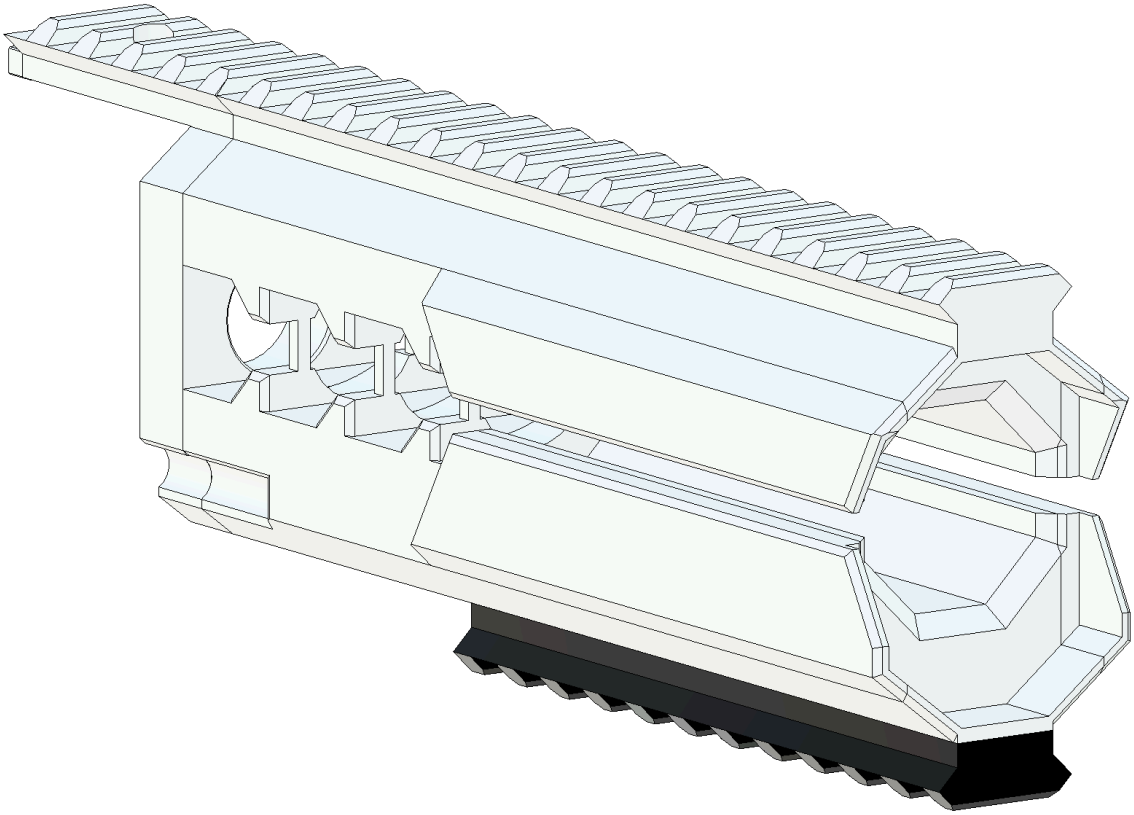
- Install both handle heads and secure with 6-32 socket head screws.
- Install bottom 623 bearings with 8 mm M3 socket head screws.